Mitutoyo

GB-20003

MEASURING INSTRUMENTS CATALOGUE 2017 - 2019

Competence and customer proximity on one spot

Throughout Europe, the name Mitutoyo represents innovational power as well as outstanding quality in the field of sophisticated dimensional measuring solutions. In order to strengthen and synchronise the concerted pan-European activities, Mitutoyo established the European headquarters named Mitutoyo Europe GmbH in Neuss near Düsseldorf/Germany in January 2010.

The headquarters oversees all the activities of Mitutoyo's sales, service and production facilities throughout Europe and adjacent markets, e.g. of Turkey. It also plans and implements the medium and long term business strategies of such European operations. A Mitutoyo Europe GmbH key objective is to promote coordination amongst its European group companies in order to optimise its sales and technical support services in the best interests of customer satisfaction.

More than 260 highly skilled members of staff work for the benefit of our customers in development, service, sales and administration. They are supported by the specialists of Mitutoyo CTL Germany GmbH in Oberndorf on the River Neckar, which focuses solely on developing ground-breakingly powerful and easy to use software for three-coordinate measurement technology. The peripheral fields of coordinate measuring machines, jigging and loading systems and thermal cabins are covered by KOMEG company based in Saarland.

The range of products offered by Mitutoyo in Europe is divided into eight groups:

- Coordinate Measuring Machines
- Vision Measuring Systems
- Form Measurement
- Optical Measuring
- Sensor Systems
- Test Equipment and Seismometers
- Digital Scale and DRO Systems
- Small Tool Instruments and Data Management

In addition to top-level measuring and testing equipment, the range of products also includes a wide selection of accessories and – as a further area of focus – sophisticated, high-performance software for coordinate measuring machines and vision measuring systems as well as surface roughness, hardness and form measurement.

The Mitutoyo Information Center of Metrology (MIM) has been demonstrating the manufacturer's commitment to advanced training in all fields of dimensional measurement technology since 1999. The MIM is open to anyone working in the fields of manufacturing, service, science and research. Mitutoyo Europe GmbH is, moreover, a corporate member of "Ausbildung Koordinatenmesstechnik e. V. (AUKOM)". This association is dedicated to providing training schemes for coordinate measuring technology with the aim of ensuring a neutral, comprehensive and state of the art training concept.

Germany has also been home to the Mitutoyo M³ Solutions Europe division since 2004. The abbreviation M³ stands for Mitutoyo Measurement Metrology and, as such, for the concept of special measuring solutions developed by Mitutoyo to meet the particular requirements of its customers across the whole breadth of length, form and surface measurement technology. The Mitutoyo Europe GmbH in Neuss offers sample configurations in the 400 m² M³ Solution Center Europe to demonstrate the numerous possibilities. The center also presents the smooth and seamlss integration of peripheral systems, such as jigs or feed and climate control systems from KOMEG alongside the measuring equipment.

Highlights

Dial Test Indicator

ABS AOS Caliper IP67

New Indicator Series

QM Height

MF Microscope

SJ-410

SV-3200

RA-6000CNC

HM-210

Automatic CMM Part Program Generation

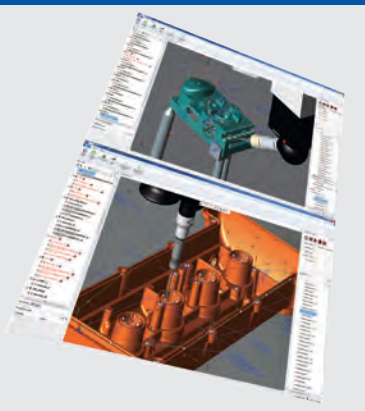

MACH Ko-ga-me

CRYSTA-Apex S

MANUAL Vision

CNC Vision

Fixtures

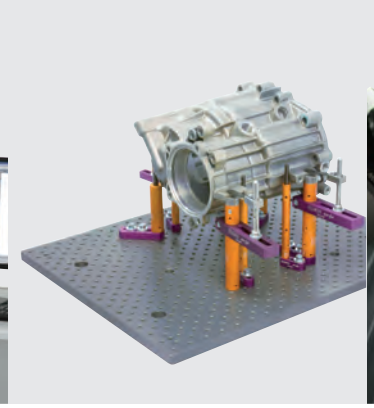

Styli

Table of Contents

Data Management

Quality Management Software
Digimatic Mini Processor
Signal Cables
Wireless Data Transmission
etc.

14 - 33

Height Gauges

Height Gauge
Height Gauge Accessories
Height Gauge with Data Processing Unit

219 - 232

Micrometers

Digimatic Micrometers and Mechanical Micrometers
Micrometers Accessories
Micrometer Heads
Micrometer Head Accessories

34 - 127

Indicators

ABSOLUTE Digimatic Indicator
Dial Indicator
Accessories for Indicator
Dial Test Indicator
etc.

233- 298

Inside Measuring Instruments

Inside Micrometer
Bore Gauges
Inside Measuring Instruments Accessories

128 - 164

Auxiliary Equipment and Miscellaneous

Stands, Bench Tools, Vices, V-Blocks, Plates, Protectors, Levels, Squares, Rules, Spring Calipers

299 - 323

Calipers

Absolute Digimatic Caliper
Analog Caliper
Special Purpose Caliper
Caliper Accessories

165 - 203

Calibration Instruments

Height Master
Check Master
Calibration Tools

324 - 339

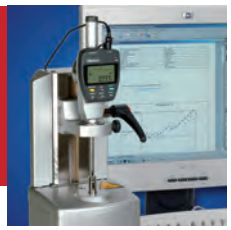

Depth Measuring Instruments

Depth Measuring Instruments

204 - 218

Gauge Blocks

Steel Gauge Block Sets
Steel Individual Gauge Blocks
CERA Gauge Block Sets
CERA Individual Gauge Blocks
etc.

340 - 358

Sensor Systems and Laser Scan Micrometers

Linear Gauges
Counters and Display Units
LITEMATIC
Laser Scan Micrometer

359 - 391

Coordinate Measuring Machines

CMM Software
Mobile 3D Systems and Manual CMMs
Small- and Medium Size CMMs
Large Size CMMs
etc.

560 - 585

Scale Units and Linear Scales

Scale Units
Linear Scale
NC-Scales
2D Image Correlation Encoder

392 - 422

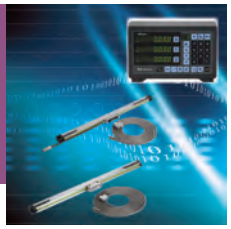

Vision Measuring Systems

Manual 2D Vision Measuring Systems
Quick Image
Manual and CNC Vision Measuring Systems Quick Scope
etc.

586 - 610

Optical Measuring

Illumination Units
Magnifiers
Stereo Microscopes
Measuring Microscopes
etc.

423 - 478

Spare Parts

Batteries
Washers, Anvils
Mirrors, Stage Glass
Papers Rollsink Ribbons, Bulbs

611- 615

Form Measurement

Surface Roughness Measuring Instruments Surftest
Contour Measuring Instruments Contracer
Form Measuring Instruments
etc.

479 - 534

For better communication with our customers

Mitutoyo's Domestic Network
Mitutoyo's Overseas Network
M³ Solution Centers

616 - 619

Hardness Testing

Hardness Testing Machines

535 - 559

Indexes

INDEXES

620 - 627

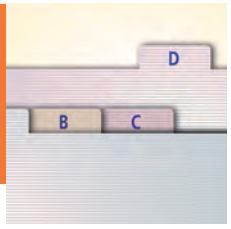

Offering Reliable Traceability Worldwide

Calibration laboratories worldwide

Mitutoyo has a system allowing comprehensive support for the calibration of precision measuring products in the global market. In order to provide calibration services on a global basis, Mitutoyo has calibration laboratories that have received ISO/IEC 17025 certification, which is an international standard, from the accredited organisations in each of the countries in which Mitutoyo operates and subsidiaries are located, both in Japan and overseas.

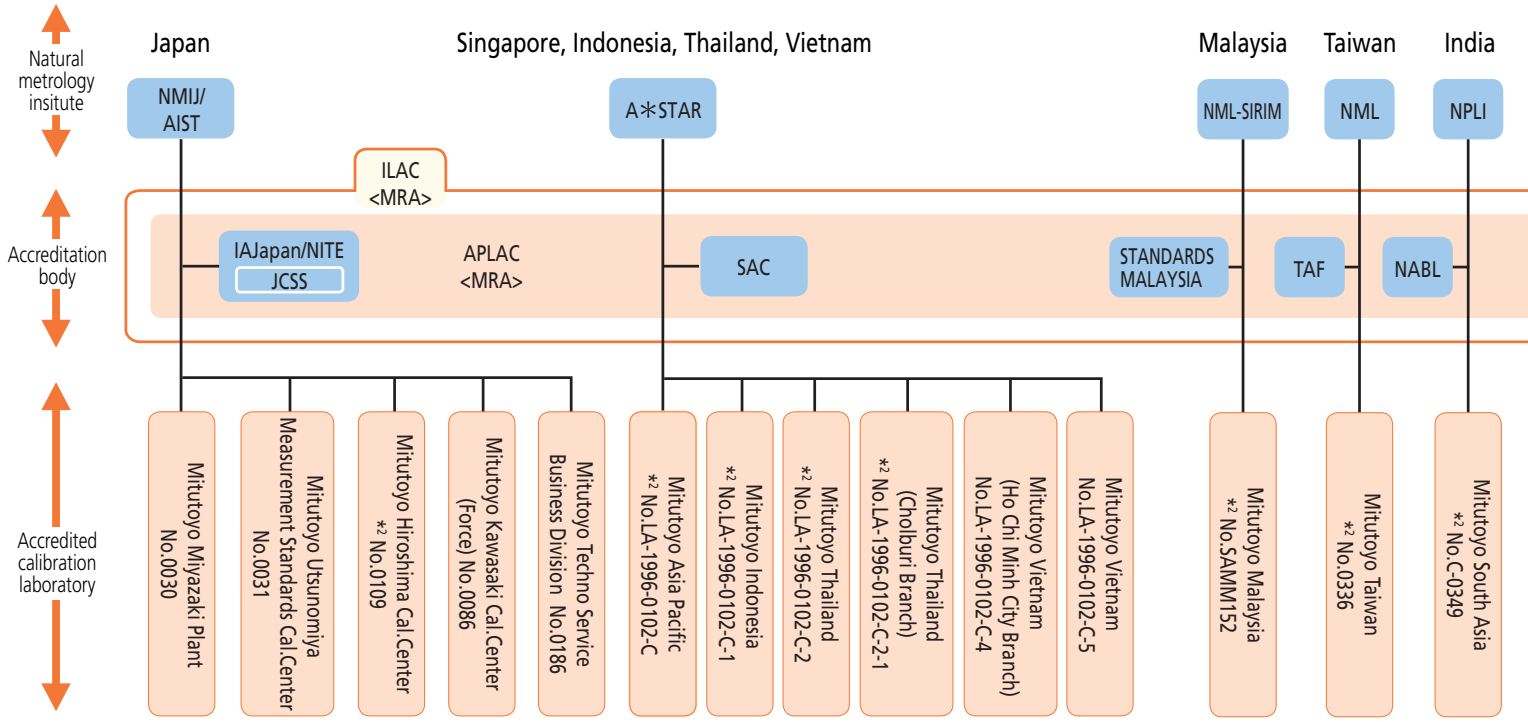

*1 Length and Temperature *2 Length and Hardness No mark is only length

AIST:	National Institute of Advanced Industrial Science and Technology
NMIJ:	National Metrology Institute of Japan
JCSS:	Japan Calibration Service System
NITE:	National Institute of Technology and Evaluation
IAJapan:	International Accreditation Japan
A*STAR:	Agency for Science, Technology and Research
SAC:	Singapore Accreditation Council
NML:	National Measurement Laboratory
TAF:	Taiwan Accreditation Foundation
NML-SIRIM:	National Metrology Laboratory, Standards and Industrial Research Institute of Malaysia
STANDARDS: MALAYSIA	Department of Standards Malaysia
NIST:	National Institute of Standards and Technology
A2LA:	American Association for Laboratory Accreditation
NRC-INMS:	National Research Council of Canada-Institute for National Measurement Standards
CLAS:	Calibration Laboratory Assessment Service
SCC:	Standards Council of Canada
CENAM:	Centro Nacional de Metrologi´a
EMA:	Entidad Mexicana de Acreditacio´n, a.c.
UKAS:	United Kingdom Accreditation Service
NMi:	Nederlands Meetinstituut
RvA:	Raad voor Accreditatie
PTB:	Physikalisch-Technische Bundesanstalt
DAkkS:	Deutsche Akkreditierungsstelle GmbH
METAS:	The Swiss Federal Office of Metrology and Accreditation
SAS:	Swiss Accreditation Service
IMGC:	Istituto di Metrologia " GUSTAVO COLONNETTI "
ACCREDIA:	L'NTE ITALIANO DI ACCREDITAMENTO
SP:	Swedish National Testing and Research Institute
SWEDAC:	Swedish Board for Accreditation and Conformity Assessment
INMETRO:	Instituto Nacional de Metrologia Normalizacao e Qualidade Industrial
RBC:	Rede Brasileira de Calibracao
INTI:	Instituto Nacional de Tecnologia Industrial
OAA:	Organismo Argentino de Acreditaci
NPL:	National Physical Laboratory
NPLI:	National Physical Laboratory of India
NABL:	National Accreditation Board for Testing and Calibration Laboratories
(ILAC):	International Laboratory Accreditation Cooperation
(APLAC):	Asia-Pacific Laboratory Accreditation Cooperation
(EA):	European Accreditation Cooperation
(MRA):	Mutual Recognition Arrangement
#:	Accreditation No.

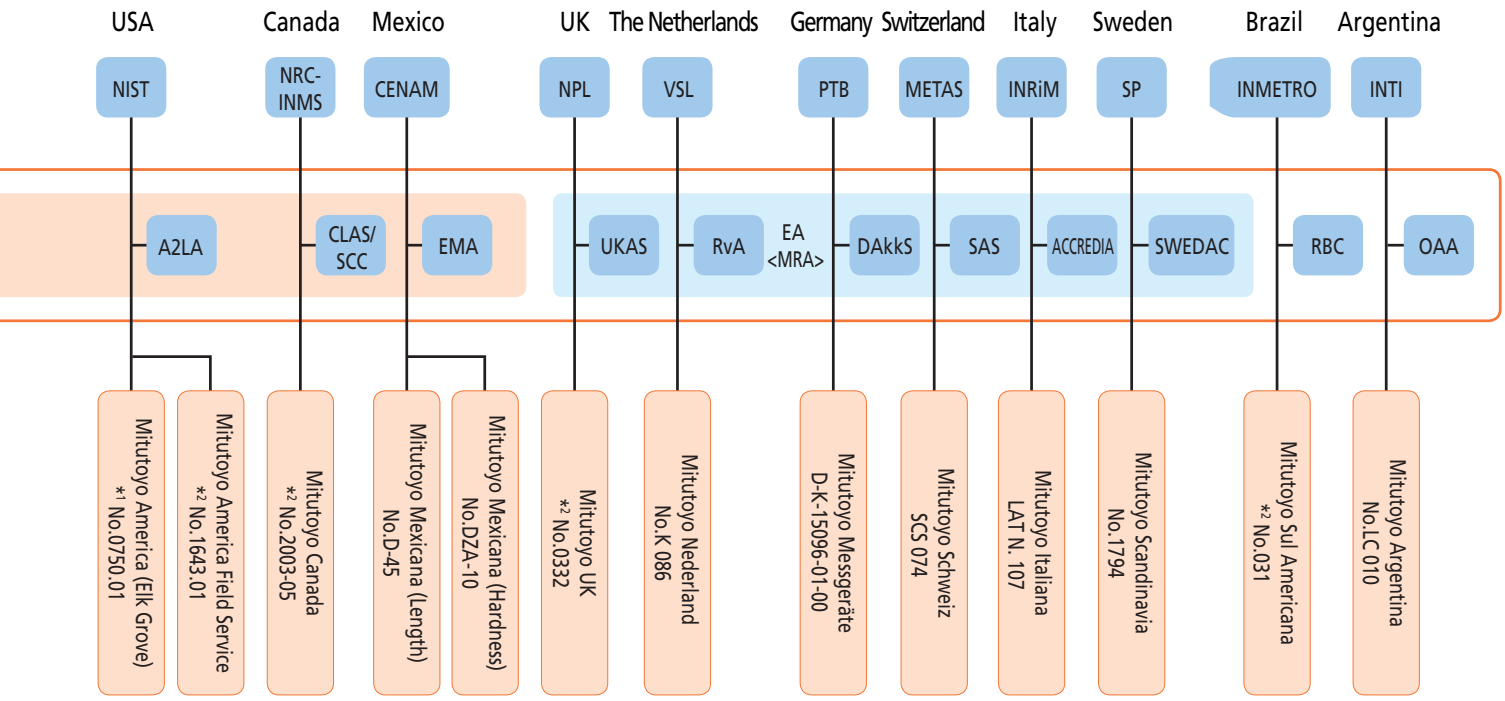
USA
Canada
Mexico
UK
The Netherlands
Germany
Switzerland
Italy
Sweden
Brazil
Argentina
NIST
NRC-INMS
CENAM
NPL
VSL
PTB
METAS
INRiM
SP
INMETRO
INTI
A2LA
CLAS/SCC
EMA
UKAS
RvA
EA <MRA>
DAkkS
SAS
ACCREDIA
SWEDAC
RBC
OAA
Mitutoyo America (Elk Grove) *1 No.0750.01
Mitutoyo America Field Service *2 No.1643.01
Mitutoyo Canada *2 No.2003-05
Mitutoyo Mexicana (Length) No.D-45
Mitutoyo Mexicana (Hardness) No.DZA-10
Mitutoyo UK *2 No.0332
Mitutoyo Nederland No.K 086
Mitutoyo Messgeräte D-K-15096-01-00
Mitutoyo Schweiz SCS 074
Mitutoyo Italiana LAT N. 107
Mitutoyo Scandinavia No.1794
Mitutoyo Sul Americana *2 No.031
Mitutoyo Argentina No.LC 010

DAkkS
Deutsche Akkreditierungsstelle GmbH

A2LA
ACCREDITED LABORATORY
A2LA has accredited
MITUTOYO AMERICA CORPORATION (MAC)
Aurora, IL
for technical competence in the field of
Calibration

ema
ACREDITA
A
MITUTOYO MEXICANA, S.A. DE C.V.
LABORATORIO DE CALIBRACIÓN MITUTOYO MEXICO
Dureza*

SINGAPORE ACCREDITATION COUNCIL
Certificate of Accreditation

NABL
National Accreditation Board for Testing and Calibration Laboratories
CERTIFICATE OF ACCREDITATION
MITUTOYO SOUTH ASIA PRIVATE LIMITED
ISO/IEC 17025:2005
NEW DELHI
MECHANICAL CALIBRATION

CERTIFICADO DE CREDENCIAMENTO DE LABORATÓRIO DE CALIBRAÇÃO
Laboratório de Metrologia
Escopo do Credenciamento: Força e Dureza
Mitutoyo Sul Americana Ltda
Rodovia Índio Tibiriçá nº 1555 - Suzano - Estado de São Paulo

Mitutoyo

Offering High-level Calibration Services Worldwide

Based on highest measurement capabilities of the same level as national standards

Traceability system

Mitutoyo has a traceability system made possible through an in-house calibration organisation certified by the ISO/IEC 17025 international standard, with length standards directly related to national standards (atomic clock synchronised to UTC and the optical frequency comb) at the highest level.
National standards are mutually recognised by CIPM, and the certified calibration organisation is mutually recognised by ILAC, so that the establishment and maintenance of traceability for Mitutoyo products is achieved both in Japan and overseas.

Certificate of JCSS accredited laboratory (Mitutoyo Utsunomiya Measurement Standards Calibration Center)

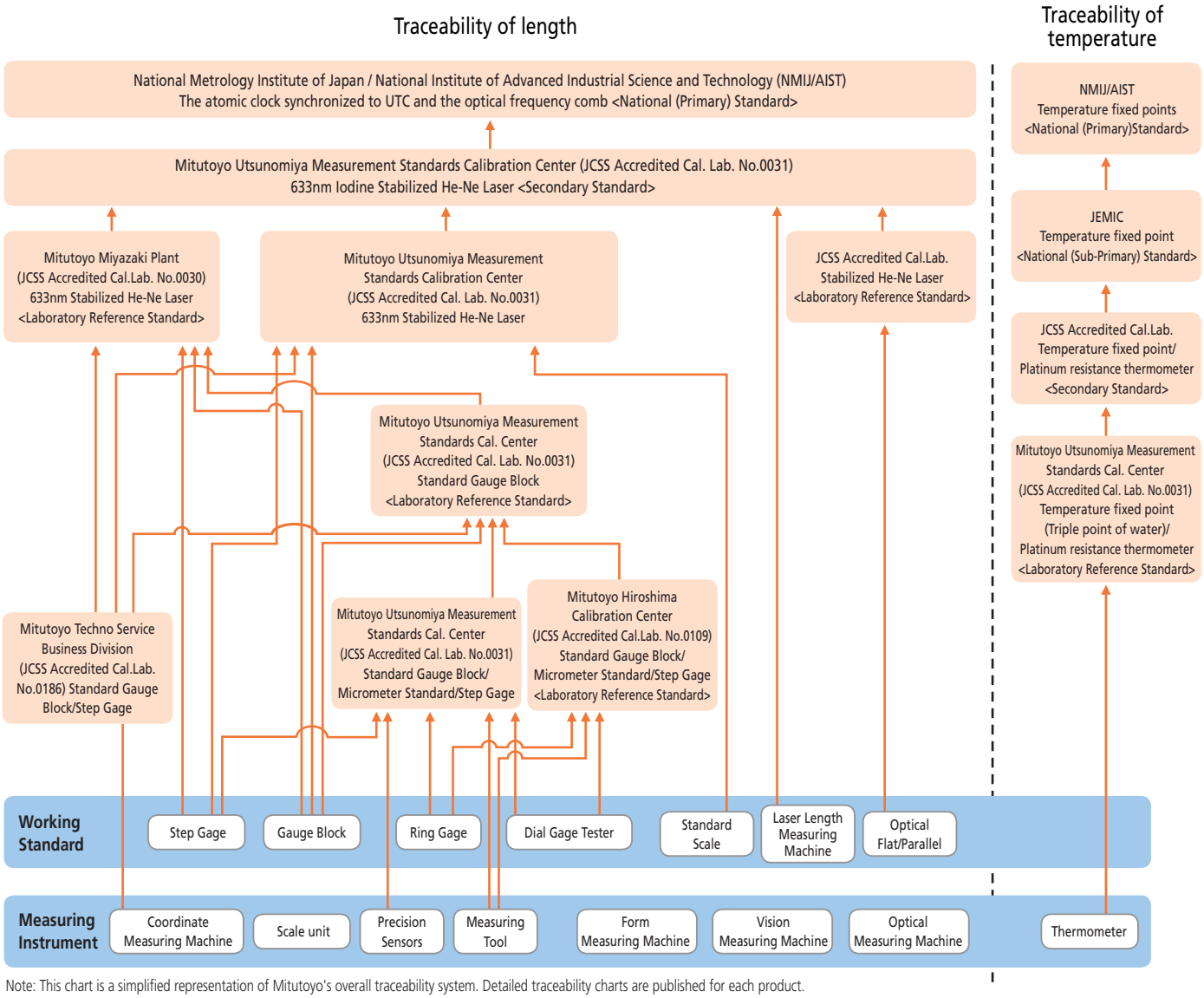

Note: This chart is a simplified representation of Mitutoyo's overall traceability system. Detailed traceability charts are published for each product.

CE Marking Directives

Traceability of Test Equipment

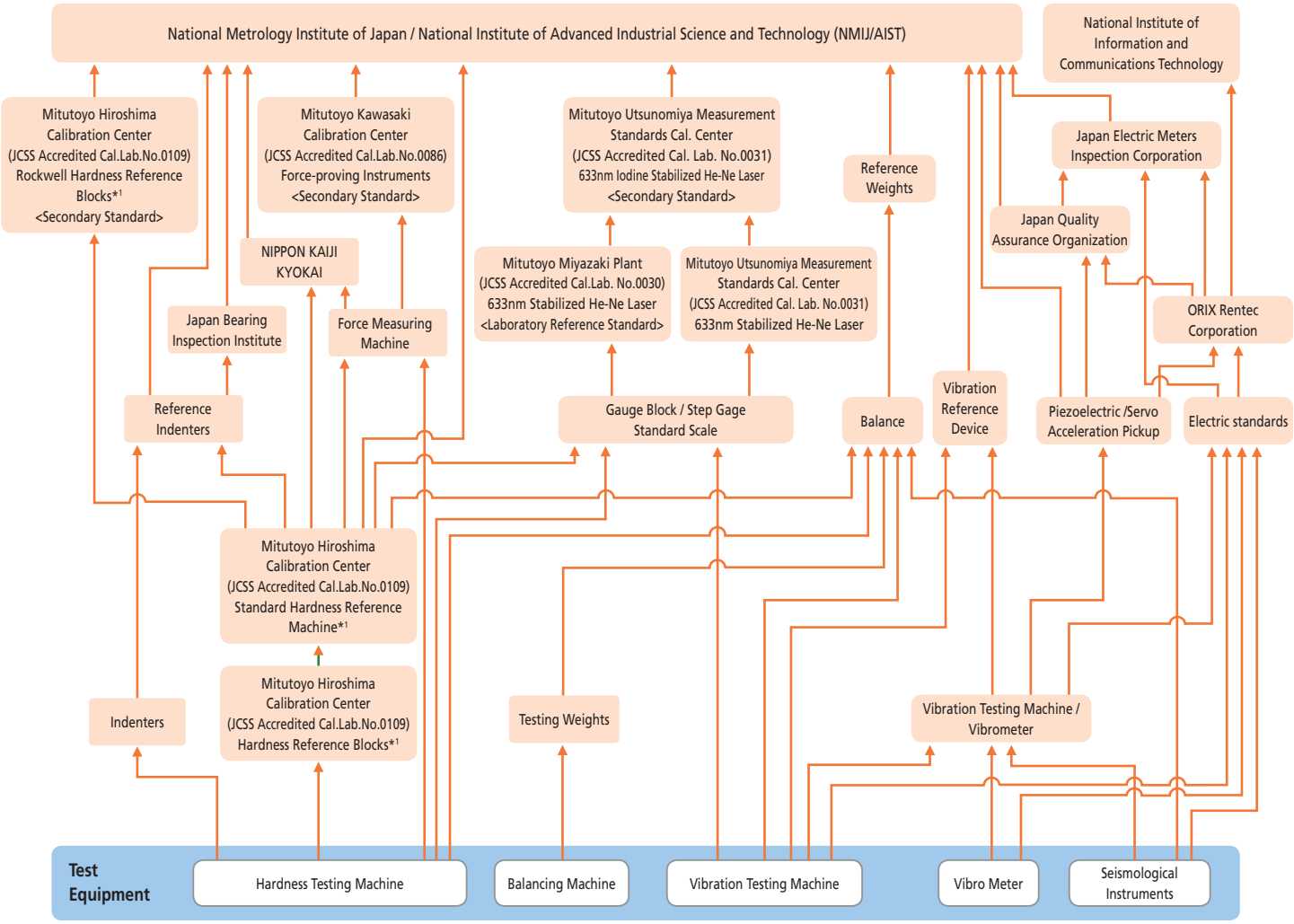

*1 The scope of JCSS accreditation is from 20HRC up to 65HRC in Rockwell Hardness Testing Machines and Hardness Reference Blocks.

Note: This chart is a simplified representation of Mitutoyo's overall traceability system. Detailed traceability charts are published for each product.

CE Marking Directives

CE stands for "Conformité Européenne", a challenging and important task for Mitutoyo in Europe. For Mitutoyo as a manufacturer of measuring electronics and measuring machines this means no sale without CE marking, no CE marking without completed conformity assessment procedure.

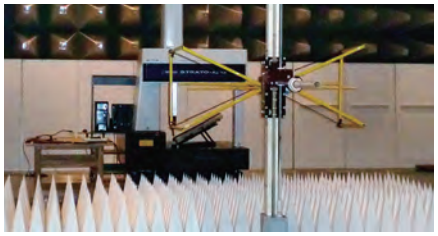

Meaning of Symbols

ABSOLUTE®

ABSOLUTE Linear Encoder

Mitutoyo's technology has realised the absolute position method (absolute method). With this method, you do not have to reset the system to zero after turning it off and then turning it on. The position information recorded on the scale is read every time. The following three types of absolute encoders are available: electrostatic capacitance model, electromagnetic induction model and model combining the electrostatic capacitance and optical methods. These encoders are widely used in a variety of measuring instruments as the length measuring system that can generate highly reliable measurement data.

Advantages:

1. No count error occurs even if you move the slider or spindle extremely rapidly.
2. You do not have to reset the system to zero when turning on the system after turning it off*1.
3. As this type of encoder can drive with less power than the incremental encoder, the battery life is prolonged to about 3.5 years (continuous operation of 18,000 hours)*2 under normal use.

*1: Unless the battery is removed
*2: In the case of the ABSOLUTE AOS Digimatic caliper (electromagnetic encoder model)

Mitutoyo guarantees the product quality
PROPRIETARY INSPECTION CERTIFICATE
Mitutoyo guarantees the product quality

Measuring Instruments Shipped with Inspection Certificate

Mitutoyo guarantees product quality as a leading precision measuring instrument manufacturer and ships measuring instruments with an inspection certificate that includes inspection data so that customers can use them with confidence. Mitutoyo also calibrates the purchased measuring instrument and issues, for a fee, a calibration certificate that proves traceability to the relevant standard.

* For the meaning of the inspection marks shown at left, refer to the detailed description of each product

Main Unit Startup System

Installation of Main Unit Startup System

As a part of the enhancement of our export control system, the CNC measuring machines (all the CNC Coordinate Measuring Machines, Vision Measuring Systems, and Form Measuring Machines) are equipped with a Main Unit Startup System (relocation detecting system). This system is designed to take a machine out of operation upon detecting the mechanical shock that accompanies relocation. If you intend to relocate a measuring machine fitted with this system, please contact us beforehand so that our service engineers can assist you. On the other hand, the system may be triggered in the event of a natural event such as a powerful earthquake. In this case, our service engineers will deal with the situation at the earliest opportunity.

IP65

IP66

IP67

IP Codes

These are codes that indicate the degree of protection provided (by an enclosure) for the electrical function of a product against the ingress of foreign bodies, dust and water as defined in IEC standards (IEC 60529: 2001) and JIS C 0920: 2003. [IEC: International Electrotechnical Commission]

First characteristic numeral	Degrees of protection against solid foreign objects	
	Brief description	Definition
0	Unprotected	—
1	Protected against solid foreign objects of Sø50 mm and greater	A Sø50 mm object probe shall not fully penetrate enclosure*
2	Protected against solid foreign objects of Sø12.5 mm and greater	A Sø12.5 mm object probe shall not fully penetrate enclosure*
3	Protected against solid foreign objects of Sø2.5 mm and greater	A Sø2.5 mm object probe shall not fully penetrate enclosure*
4	Protected against solid foreign objects of Sø1.0 mm and greater	A Sø1.0 mm object probe shall not fully penetrate enclosure*
5	Protected against dust	Ingress of dust is not totally prevented, but dust that does penetrate must not interfere with satisfactory operation of the apparatus or impair safety.
6	Dust-proof	No ingress of dust allowed.
7	—	
8	—	

*: For details of the test conditions used in evaluating each degree of protection, please refer to the original standard.

Second characteristic numeral	Degrees of protection against water	
	Brief description	Definition
0	Unprotected	—
1	Protected against vertical water drops	Vertically falling water drops shall have no harmful effects.
2	Protected against vertical water drops within a tilt angle of 15 degrees	Vertically falling water drops shall have no harmful effects when the enclosure is tilted at any angle up to 15° on either side of the vertical.
3	Protected against spraying water	Water sprayed at an angle up to 60° either side of the vertical shall have no harmful effects.
4	Protected against splashing water	Water splashed against the enclosure from any direction shall have no harmful effects.
5	Protected against water jets	Water projected in jets against the enclosure from any direction shall have no harmful effects.
6	Protected against powerful water jets	Water projected in powerful jets against the enclosure from any direction shall have no harmful effects.
7	Protection against water penetration	Ingress of water in quantities causing harmful effects shall not be possible when the enclosure is temporarily immersed in water under standardised conditions of pressure and time.
8	Protected against the effects of continuous immersion in water	Ingress of water in quantities causing harmful effects shall not be possible when the enclosure is continuously immersed in water under conditions which shall be agreed between manufacturer and user but which are more severe than for IPX7.

Dust- and Waterproof IP65
www.tuv.com
ID 0000021605

Safety Dust- and Water-Protected
www.tuv.com
ID 0000007162

Safety Dust- and Water-Protected
www.tuv.com
ID 0000006683

Independent Confirmation of Compliance

IP65, IP66 and IP67 protection level ratings for applicable Mitutoyo products have been independently confirmed by the German certification organisation, TÜV Rheinland.

Metric/Inch

Mitutoyo offers this quality product also in an switchable Metric/Inch version. Please refer to your local Mitutoyo website for detailed information.

Inch/Metric

Mitutoyo offers this quality product also in an switchable Inch/Metric version. Please refer to your local Mitutoyo website for detailed information.

Inch

Mitutoyo offers this quality product also in an Inch version. Please refer to your local Mitutoyo website for detailed information.

Example of Measurement Data Management System Design

A system for recording and analysing measurement results from various Mitutoyo measuring instruments for quality assurance purposes.

Implementation Step 1

Recording measurement results

No more handwriting

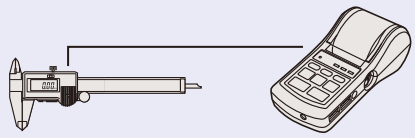

Measurement data can be printed easily. Data can be output to a PC for statistics calculations.

DP-1VR

Direct data input to a PC

Connecting-cable-integrated USB-ITN

USB Input Tool Series

Lineups of three models with different output specifications
IT-012U/IT-005D/IT-007R

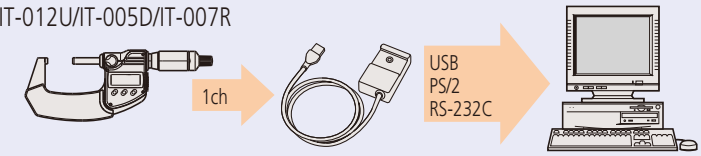

Input Tool Series

Connectable to a RS-232C interface PC with 4 channels and a sequencer

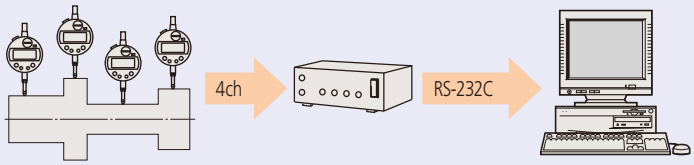

Multiplexer MUX-10F

Wireless

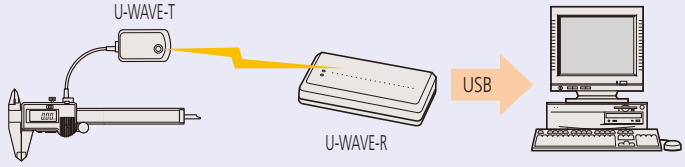

U-WAVE

Implementation Step 2

Software dedicated to inspection and quality control

Inspection certificate creation

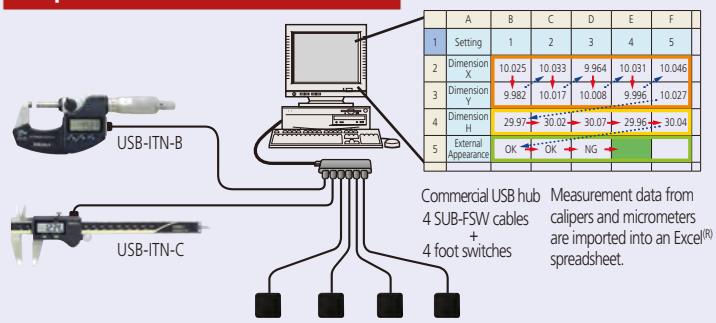

	A	B	C	D	E	F
1	Setting	1	2	3	4	5
2	Dimension X	10.025	10.033	9.964	10.031	10.046
3	Dimension Y	9.982	10.017	10.008	9.996	10.027
4	Dimension H	29.97	30.02	30.07	29.96	30.04
5	External Appearance	OK	OK	NG		

USB-ITPAK

Statistical process control

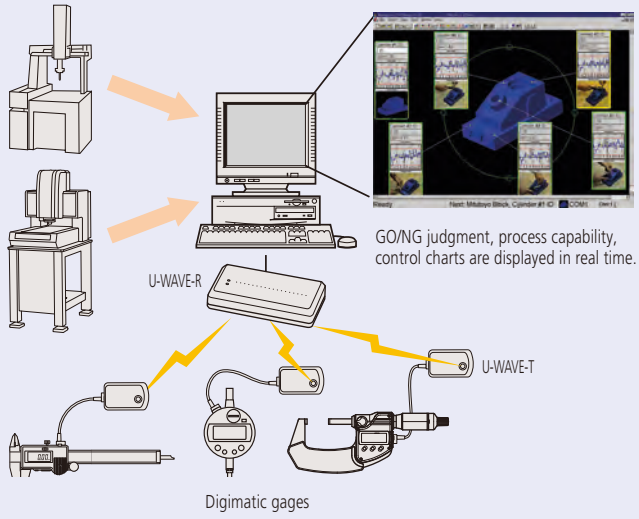

GO/NG judgment, process capability, control charts are displayed in real time.

MeasurLink

All products to be sold to commercial customers. Product illustrations are without obligation. Product descriptions, in particular any and all technical specifications, are only binding when explicitly agreed upon. For suggested retail prices, please refer to the separate price list.

Implementation Step 3

Creating a quality control network covering a wide area within the factory

Unify management of the quality test using the network in the factory

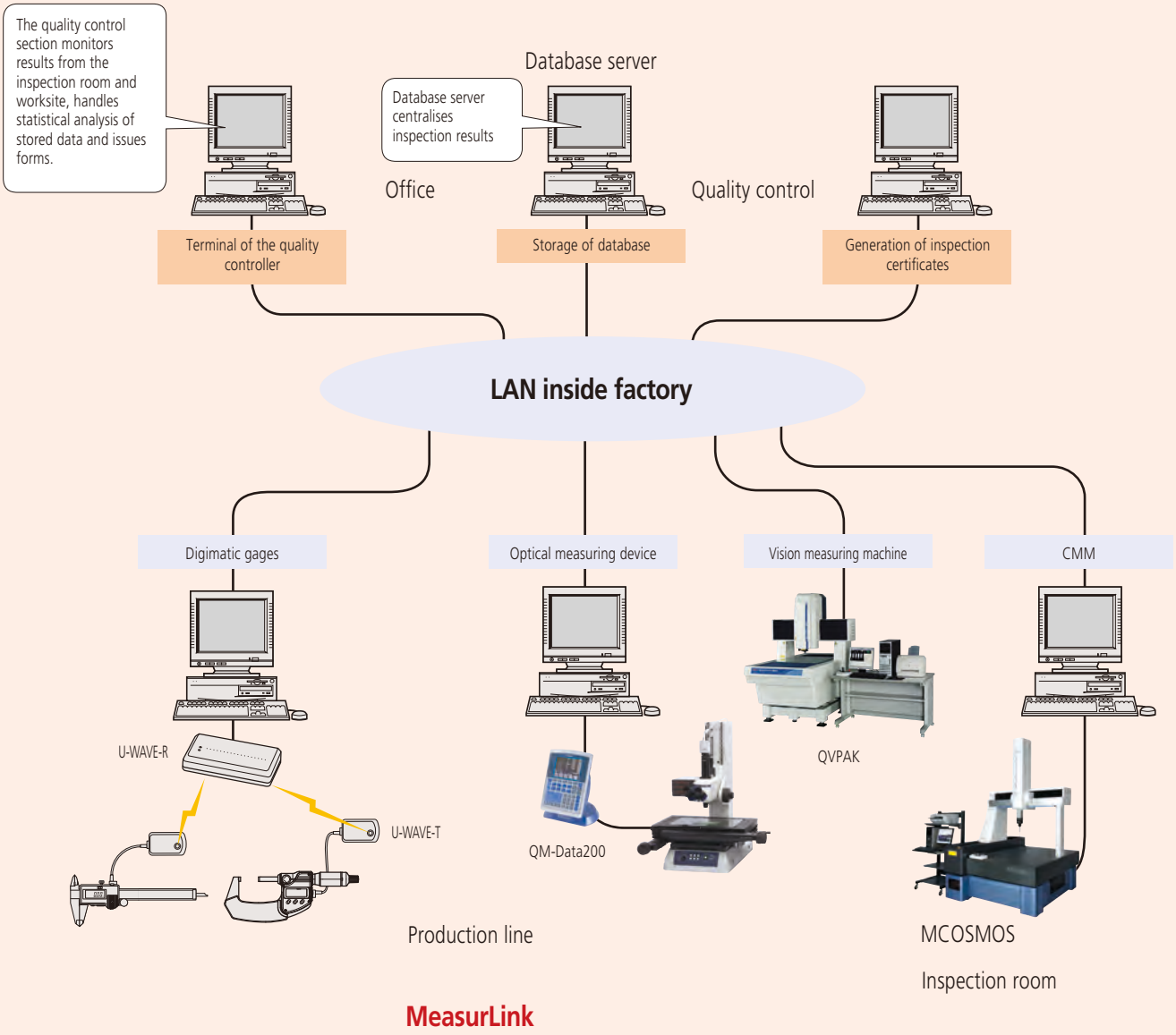

All products to be sold to commercial customers. Product illustrations are without obligation. Product descriptions, in particular any and all technical specifications, are only binding when explicitly agreed upon. For suggested retail prices, please refer to the separate price list.

Mitutoyo

Quality Management Software
Page 15

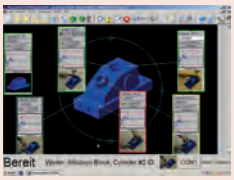

Digimatic Mini Processor
Page 20

Signal Cables
Page 21

Wireless Data Transmission
Page 25

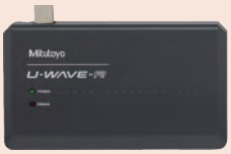

Digimatic Interface
Page 27

Tolerancing, Timing, Display Units and Data Logger
Page 31

All products to be sold to commercial customers. Product illustrations are without obligation. Product descriptions, in particular any and all technical specifications, are only binding when explicitly agreed upon. For suggested retail prices, please refer to the separate price list.

MeasurLink 8

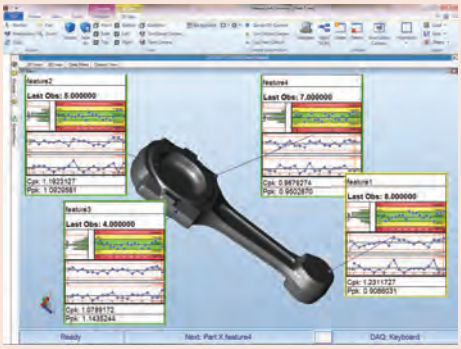

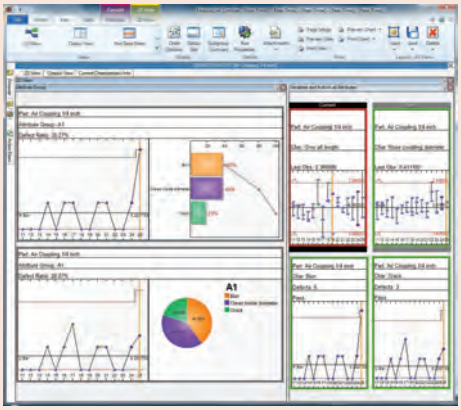

MeasurLink brochure available on request

An Integrated Solution for Quality Data Management

Most of Mitutoyo's electronic instruments can output data via optional connecting cables or wireless transmitters & receivers in the form of the Digimatic code. The Digimatic code can also be converted in RS-232C format by any of several available gage multiplexers. In this way, digital data can be sent to PCs for data acquisition and advanced statistical analysis.

As a client/server application, MeasurLink gives you the performance you need through distributed processing. Combined with a multi-user relational database, MeasurLink delivers a safe and organized data warehousing system making quality data available for viewing and analysis by any member of the production, engineering and managerial staff throughout your company. Inspection in the factory produces data for analysis, corrective action, and various reporting needs. As the backbone of your quality efforts, MeasurLink is guaranteed to reduce your production costs and increase your buttom line.

MeasurLink is capable of linking and managing multiple "islands" of inspection into a common database of part information, statistical data, gage information, process, etc. Information is shared across an entire manufacturing facility.

Group Licensing

MeasurLink is available in several modules offering you a wide range of solutions, from data acquisition to manager views and gage management. Details about all modules can be found on the next pages. However, you can create your own package and combine modules by choosing one of the following license bundles:

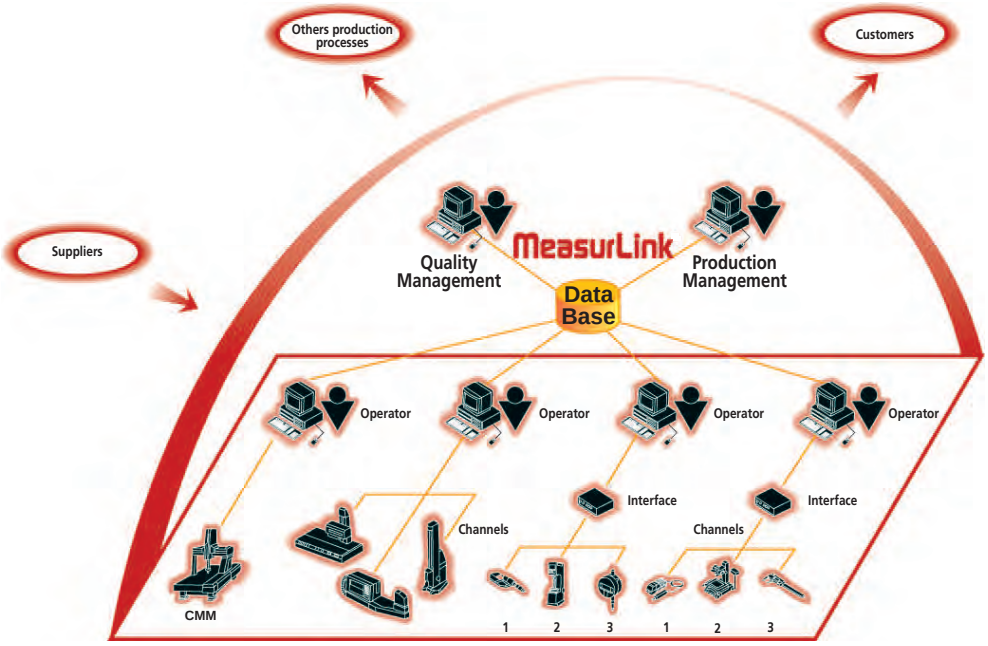

No.	Description
64AAB479R	MeasurLink 8 Site License - 30 Licences *
64AAB483R	MeasurLink 8 Workgroup License - 5 Licenses *
64AAB482R	MeasurLink 8 Workgroup License - 10 Licenses *
64AAB480R	MeasurLink 8 Workgroup License - 15 Licenses*
64AAB484R	MeasurLink 8 Academic License - 20 Licenses *

* Real-Time Professional 3D is not included

All products to be sold to commercial customers. Product illustrations are without obligation. Product descriptions, in particular any and all technical specifications, are only binding when explicitly agreed upon. For suggested retail prices, please refer to the separate price list.

MeasurLink 8

MeasurLink Real-Time Standard Edition

Designed for customers who want to aquire and analyze data in real-time from Small Tools like calipers and micrometers.

Features:
- Variable and attributive inspection
- Real-time graphics
- Run charts
- Control charts
- Histograms
- Statistics
- Customized Info View
- Full Reporting Template

Supported data sources: keyboard, RS232-C, USB devices

No.	Description
64AAB470R	MeasurLink 8 Real-Time Standard Edition

MeasurLink Real-Time Professional Edition

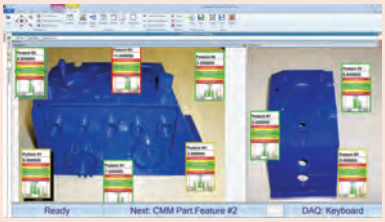

On-line Real-Time Data Collection

Acquire data directly from Mitutoyo devices such as:
- Coordinate Measuring Machines
- Form Measuring Instruments
- Vision Measurement Machines

Import data from other devices via:
- ASCII
- QMD (xml based)

Features:
- Variable and attributive inspection
- Real-time graphics
- Run charts
- Control charts
- Histograms
- Statistics
- Customized Info View
- Full Reporting Template
- **Data filter**

Supported data sources: keyboard, RS232, USB devices, **Mitutoyo DDE, ASCII, QMD.**

No.	Description
64AAB471R	MeasurLink 8 Real-Time Professional Edition

All products to be sold to commercial customers. Product illustrations are without obligation. Product descriptions, in particular any and all technical specifications, are only binding when explicitly agreed upon. For suggested retail prices, please refer to the separate price list.

MeasurLink 8

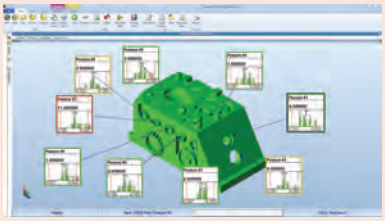

MeasurLink Real-Time Professional 3D Edition

On-line Real-Time Data Collection

Designed for customers who wish to collect data using the Hoops 3D graphics view. Hoops 3D files can be exported from most CAD systems and provide the operator with a real view of the part.
Acquire data directly from Mitutoyo devices such as:
- Coordinate Measuring Machines
- Form Measuring Instruments
- Vision Measurement Machines

Import data from other devices via:
- ASCII
- QMD (xml based)

Features:
- Variable and attributive inspection
- Real-time graphics
- Run charts
- Control charts
- Histograms
- Statistics
- Customized Info View
- Full Reporting Template
- **Data filter**
- **3D View**
- **Flexible callout design**
- **Guided sequence**

Supported data sources: keyboard, RS232, USB devices, **Mitutoyo DDE, ASCII, QMD.**

No.	Description
64AAB472R	MeasurLink 8 Real-Time Professional 3D Edition

MeasurLink Process Analyse Professional Edition

Data Analysis Software

Designed for more robust manipulation of Real-Time data in a networked environment.
- Slice and dice data in meaningful ways
- Contribute to quality control initiatives!
- Analyze your process
- Identify problem areas
- Take corrective action
- Improve your product's quality!

Features:
- Review inspection data
- Switch between datbases
- Tree control navigation
- Reporting
- Group, search and sort data
- Merge data
- Scatter plots
- Electronic signatures

No.	Description
64AAB475R	MeasurLink 8 Process Analyzer Professional Edition

All products to be sold to commercial customers. Product illustrations are without obligation. Product descriptions, in particular any and all technical specifications, are only binding when explicitly agreed upon. For suggested retail prices, please refer to the separate price list.

MeasurLink 8

MeasurLink Process Manager Standard Edition

Network Monitoring Software

Real-time monitoring of data as it is collected. The perfect tool for QC and Production Managers!

- Organize and maintain a shop-wide quality program at a glance.
- Audit the entire shop floor inspection activity from a single PC
- Get process information without leaving the office
- View current production across all machines
- Show clients your quality operation for the entire facility
- Establish Cpk thresholds for acceptability
- Stay up to the minute on production problem

– Drill down for details on certain
– tracebility
– assignable cause
– failed tests
– serial numbers

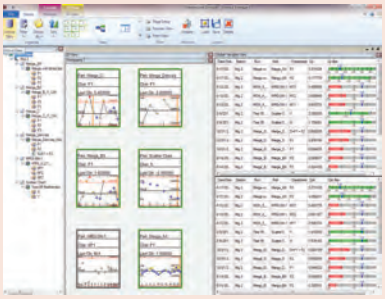

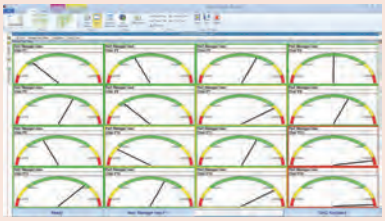

No.	Description
64AAB476R	MeasurLink 8 Process Manager Standard Edition

MeasurLink Gage R&R

Gage R and R

Designed according to standard ISO/TS 16949, Gage R&R allows you to use the methods of study AIAG :

- Range
- Average and Range
- Average and Range including part variation
- Variance analisys
- Short method for attributive gages
- Bias study
- Linearity study
- Stability study

Features :

Graphical analysis tools :

- Xbar R chart
- Part by appraiser plot

No.	Description
64AAB477R	MeasurLink Gage R&R 8

All products to be sold to commercial customers. Product illustrations are without obligation. Product descriptions, in particular any and all technical specifications, are only binding when explicitly agreed upon. For suggested retail prices, please refer to the separate price list.

MeasurLink 8

MeasurLink Gage Management

Gage Inventory and Calibration Control

MeasurLink Gage Management allows customers to build a complete gage and fixture inventory. Calibration is made simple by supporting digital gages for both, variable and attributive features. Achieve optimal calibration frequencies - set-up individual calendars with:

- Gage in-service dates
- Calibration recall dates
- Gage R&R dates

Features:

- Vendor contact lists
- User lists
- Print and archive calibration certificates
- Incremental response methods
- Customized gage label printing

No.	Description
64AAB478R	MeasurLink Gage Management 8

MeasurLink Report Scheduler V8

Report Scheduler Standard Edition is a tool that provides automated report distribution from a Windows service environment. Create reporting tasks that will run on a given schedule.

Reporting Task Type

- Crystal Reports – Select a Crystal Reports template file and database connection to report on. Set values for parameters defined in template.
- MeasurLink Reports – Select a database connection, MeasurLink report template, run or feature run data to report on, and optionally select a filter to be applied to the data.

Destinations

The reports can be printed, emailed, and exported in formats such as PDF. Multiple destinations can be assigned to a reporting task.

Assign Schedule

Schedules can be defined on hourly, daily, weekly, monthly, and yearly intervals. Define a schedule and assign it to a report task.

View Reports

Previewing the report allows validation of the output before scheduling the report task.

No.	Description
64AAB538R	MeasurLink Report Scheduler V8

All products to be sold to commercial customers. Product illustrations are without obligation. Product descriptions, in particular any and all technical specifications, are only binding when explicitly agreed upon. For suggested retail prices, please refer to the separate price list.

Digimatic Printer/Statisitic Processor DP1-VR

Series 264

This DP-1VR printer allows you to print statistical evaluations, and is so compact it fits right in the palm of your hand.
The DP-1VR offers the following benefits:
To print statistical evaluations

- You can print data from calipers, micrometers and other measuring devices equipped with a Digimatic port, and even perform statistical evaluations.
- Printing speed is excellent, it prints from a one-touch start and with the built-in thermal line printer there's almost no noise. The thermosensitive paper has outstanding durability and chemical resistance for long-term storage.
- The DP-1VR even lets you transmit the data to a computer using an RS-232C connecting cable.
- Clock function for loading measurement data.
- Processing capacity for up to 9999 data subgroups.

264-504-5D

Example application

No.	Remarks
264-504-5D	DP-1VR Digimatic MiniProcessor

Footswitch - 937179T

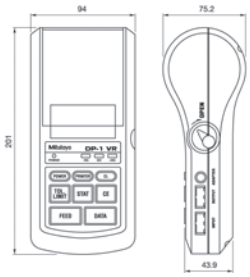

Dimensions in mm

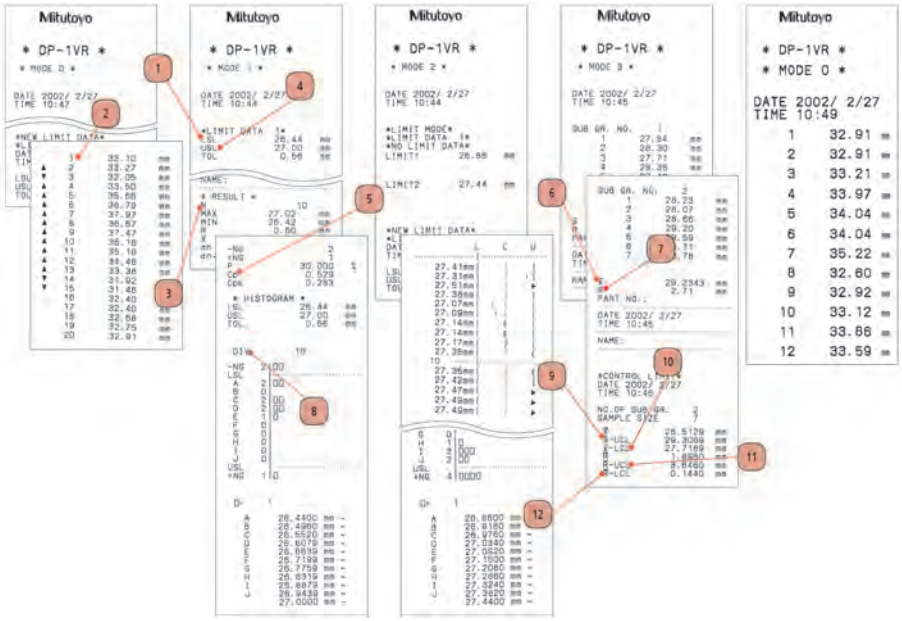

Specifications

Printer type	Thermal line printer
Printer speed	6,5 mm/s (using AC adapter)
Printer paper	48 m per roll
Processing capacity	Mode 1/2/3: 9999 data subgroups; Mode 0: 100000 data subgroups
Printable data	Measurement data, GO/±NO GO judgement, number of data, maximum/minimum value, range, average, standard deviation, number of defective, fraction defective, process capability, index, histogram, D-chart, control chart, generation for Xd-bar and control limit data, date and time
Output function	Outputs the measurement data (RS-232C) or GO/±NO GO judgement
Power	AC adapter 6V, battery: LR6 x 4 (alkaline), NiMH (rechargeable, battery is not charged in the device)
Timer function	0,25 s; 1 s; 5 s; 30 s; 1 min; 30 min; 60 min (0,25 s only statistical function)

Standard accessories

No.	Description
06AEG180D	AC-Adapter, 6V 2A, CEE Type
09EAA069D	Thermal Printer Paper DP1-VR, 1 Roll

Optional accessories

No.	Description
937179T	Footswitch for SPC
09EAA084	RS-232C Cable, DP1-VR to PC, 1m, 9 Pin Connector
09EAA094	RS-232C Cable, DP1-VR to KA-Counter, 1m, 25 Pin Connector
965516	GO/±NG judgement cable, for external device

09EAA084 and 965516 can not be used simultaneously.

Consumable spares

No.	Description
011037	Battery LR6 (AA) 4x
011348	Ni-MH Batteries (rechargeable)
09EAA082-5	Thermal Printer Paper DP1-VR, 5 Rolls
09EAA069D	Thermal Printer Paper DP1-VR, 1 Roll

DP-1VR brochure available on request

1 - Lower limit
2 - Input data
3 - Number of data
4 - Upper limit
5 - Process capabilty index
6 - Average
7 - Range
8 - Number of Division of the histogram
9 - Upper control limit (x control)
10 - Lower control limit (x control)
11 - Upper control limit (R control)
12 - Lower control limit (R control)

All products to be sold to commercial customers. Product illustrations are without obligation. Product descriptions, in particular any and all technical specifications, are only binding when explicitly agreed upon. For suggested retail prices, please refer to the separate price list.

Digimatic Data Cables

Digimatic measuring instruments require one of the following for initiating data transmission:
1. Footswitch
2. Data button on the instrument (if present)
3. Data request from the PC
4. Data cables with data button (if connectable to the measuring instrument)

These data cables allow you to connect measuring instruments with a Digimatic output to a PC or dedicated data processor.
Digimatic Data Cables offer you the following benefits:
- Connecting Mitutoyo measuring instruments that feature a Digimatic interface.
- You can also connect one or more Digimatic measuring instrument to an additional device, such as a DP-1VR, Counter or DMX Interface (PC).

No. / 1 m	No. / 2 m			
05CZA624	05CZA625	IP65/66/67 ABSOLUTE DIGIMATIC Thickness Gauge (Series 547) IP65/66/67 ABSOLUTE DIGIMATIC Caliper (Series 500, 550, 551, 573) IP65/66/67 ABSOLUTE DIGIMATIC Scale (Series 572) IP65/66/67 ABSOLUTE DIGIMATIC Depth Gauge (Series 571)	With data key and screws	
905338	905409	ABSOLUTE DIGIMATIC Dial Indicator IDS/IDC (Series 543) ABSOLUTE DIGIMATIC Dial Indicator IDU (Series 575) ABSOLUTE DIGIMATIC Thickness Gauge (Series 547) DIGIMATIC Workshop Caliper (Series 552) ABSOLUTE DIGIMATIC Caliper (Series 500 except IP65/66/67 models) ABSOLUTE DIGIMATIC Caliper (Series 550, 551, 573) DIGIMATIC Height Gauge (Series 192, 570) ABSOLUTE DIGIMATIC Depth Gauge (Series 547) Portable Hardness Tester (Series 811) ABSOLUTE DIGIMATIC Bore Gauge (Series 511) ABSOLUTE DIGIMATIC Depth Gauge (Series 571 except IP65/66/67 models) ABSOLUTE DIGIMATIC Scale (Series 572 except IP65/66/67 models) ABSOLUTE DIGIMATIC Micrometer Head (Series 164)	Straight	
905689	905690		Back side	
905691	905692		Right	
905693	905694		Left	
959149	959150		With data key	
05CZA662	05CZA663	Digimatic micrometer IP65 (Series 293, 331, 340, 342, 695) Three-point Inside Micrometer DIGIMATIC Holtest (Series 468)	With data key and screws	
937387	965013	ABSOLUTE DIGIMATIC Quick Micrometer (Series 227, 293) DIGIMATIC Micrometers (Series 293, 314, 317, 323, 324, 326, 331, 340, 342, 343, 369, 389, 395, 406, 422) DIGIMATIC Micrometer Heads (Series 164, 350) DIGIMATIC Standard Micrometer (Series 121) DIGIMATIC Depth Micrometer (Series 329) DIGIMATIC Inside Micrometer with jaws (Series 345) DIGIMATIC Inside Micrometer (Series 337, 339) ABSOLUTE DIGIMATIC Borematic (Series 568) Height Micrometer Heightmaster (Series 515) Hardness Tester Wizhard (Series 810) Hardness Tester Micro Vickers HM/HV (Series 810)	6 pin	
936937	965014	ABSOLUTE DIGIMATIC Indicator ID-F/ID-H (Series 543) Portable Surface Roughness Tester SJ-210/301/401/402 (Series 178) Profile Projector PJ-Series (Series 303) Profile Projector PH-Series (Series 172) Height Micrometer CERA Heightmaster (Series 515) Linear Height and Height Gauge QM-Series (Series 518) Linear Gauge Counter (Series 542) LSM-6000 Counter for Laser Scan Micrometer (Series 544) Laser Scan Micrometer LSM-9506 DIGIMATIC Multi-unit (Series 572) MVK-H Hardness Tester (Series 810) DIGIMATIC Port for Linear-Scale Counter	Identical connectors on both ends	
21EAA194	21EAA190	ABSOLUTE DIGIMATIC Indicator ID-N/ID-B (Series 543)		
21EAA210	21EAA211	ABSOLUTE DIGIMATIC Indicator ID-N/ID-B (Series 543) with zero-setting terminal		

All products to be sold to commercial customers. Product illustrations are without obligation. Product descriptions, in particular any and all technical specifications, are only binding when explicitly agreed upon. For suggested retail prices, please refer to the separate price list.

Digimatic Extension Cables

Series 63

– These extension cables allow you to extend Digimatic data cables up to 14 metres, extending the working distance between a measuring instrument and an external device such as a PC or DP-1VR.

63AAA036

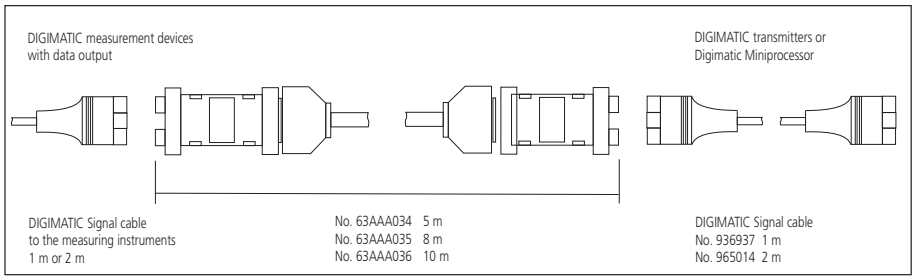

No.	Length [m]
63AAA034	3
63AAA035	5
63AAA036	10

Optional accessories

No.	Description
936937	Digimatic Cable, Flat 10-Pin Type, 1 m
965014	Digimatic Cable, Flat 10-Pin Type, 2 m

All products to be sold to commercial customers. Product illustrations are without obligation. Product descriptions, in particular any and all technical specifications, are only binding when explicitly agreed upon. For suggested retail prices, please refer to the separate price list.

USB Input Tool Direct (Digimatic-USB cable)

Series 06ADV

This input tool allows you to directly connect Digimatic measuring devices to a USB interface, without needing additional software.
The USB Input Tool Direct offers the following benefits:

- Measurement data is converted into keyboard codes, enabling interaction with any program working with keyboard entries (HID).
- You can also connect to a USB with fixed COM assignment in Microsoft® Windows® as channel identification (VCP).
- The USB-ITPAK software lets you easily create Microsoft® Excel® worksheets.
- Multi-channel input for measurement values, Microsoft® Excel®.
- Cables can be cascaded via a standard USB hub.

Specifications

Cable length	2 m
Output	USB (HID/VCP)
OS compatibility	Windows® 2000 Professional (≥SP4), Windows® XP Professional (≥SP2), Windows® XP Home Edition (≥SP2), Windows Vista®/7 (32bit,64bit), Windows® 8, 8 .1, 10 (32bit,64bit)
Max connectable devices	Microsoft® Windows® 2000, XP: 100, Windows® Vista®, 7, 8, 8. 1, 10: 20 pcs.

Optional accessories

No.	Description
937179T	Footswitch for SPC
06ADV384	USB Input Tool Direct, Footswitch Adapter
06AFM386	USB-ITPAK Version 2.1

06ADV380C

937179T and 06ADV384

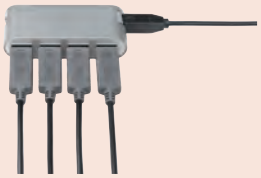

Common USB Hub

06ADV380A

06ADV380B

06ADV380C

06ADV380D

06ADV380E

06ADV380F

06ADV380G

Scan QR Code with your mobile device and watch our product videos on YouTube

Data cable USB

No.	Model	Remarks
06ADV380A	A	IP USB Input Tool Direct Cable Straight With Data Switch (2m) e.g. for IP67 Caliper
06ADV380B	B	IP USB Input Tool Direct Cable Back Side With Data Switch (2m) e.g. for IP65 Micrometer
06ADV380C	C	USB Input Tool Direct Cable Straight With Data Switch (2m) e.g. for Standard Absolute Caliper
06ADV380D	D	USB Input Tool Direct Cable Plain (2m) e.g. for IDH/IDF Indicator
06ADV380E	E	USB Input Tool Direct Cable Round (2m) e.g. for Quick Micrometer
06ADV380F	F	USB Input Tool Direct Cable Straight (2m) e.g. for IDC/IDS Indidator
06ADV380G	G	IP USB Input Tool Direct Cable IDN/IDB (2m)

Advantages of the new Digimatic USB connections

Application	Situation	Software USB-ITPAK	Data format	Remarks
Arbitrary software which expects a keyboard code	Only a USB Input tools signal cable required.	Software is not needed.	Measured value as keyboard format (HID = Human Interface Device)	Foot switch can not be connected.
Commercial statistics software like e.g. Mitutoyo MeasurLink	A USB input tools signal cable and the software USB ITPAK are required.	For each measuring instrument (cable) a fixedly assigned virtual COM-Port is generated once; afterwards Software USB IT PAK becomes inactive.	MUX-10 Specifiaction (e.g. 01A+138,626) with fixed COM assignment as channel identifiction	
Arbitrary software, which expects a keyboard code e.g. Word, txt-format		- Connected measuring instruments and foot switches are selected and assigned. - Terminator is determined. - Procedure is registered as a part program	Transmission of a measured value in text format (VCP = as virtual COM port)	
Microsoft® Excel®		- Connected measuring instruments and foot switches are selected and assigned. - Performs organization of the Microsoft® Excel®-table, i.e. the transferred measured values are written into the pre-defined cells.	Measuring report Microsoft® Excel®-format and character sequence of max. 31 characters (e.g. text input)	

All products to be sold to commercial customers. Product illustrations are without obligation. Product descriptions, in particular any and all technical specifications, are only binding when explicitly agreed upon. For suggested retail prices, please refer to the separate price list.

USB-ITPAK

Series 06AFM

- USB-ITPAK is a setting and data collection software for collection data from measuring instruments with Digimatic/Digimatic 2 output for entry to Microsoft® Excel®.
- USB Input Tool Direct cable, U-WAVE Wireless communication system and USB Footswitch adapter can be used to send the data to a Microsoft® Excel® worksheet.

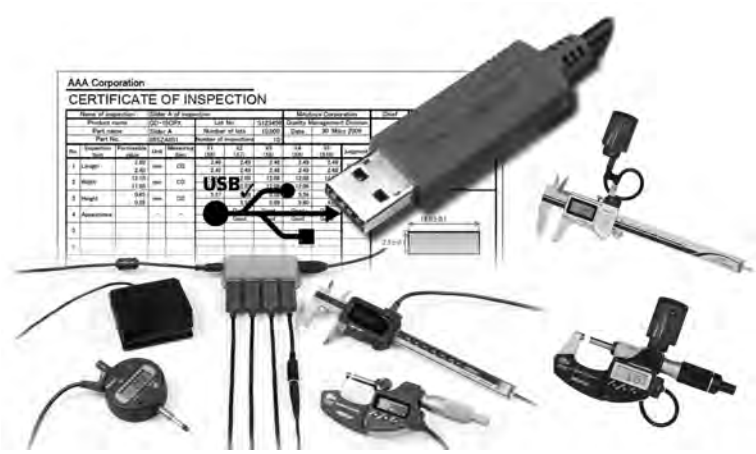

No.	Remarks
06AFM386	Software USB-ITPAK with License Key

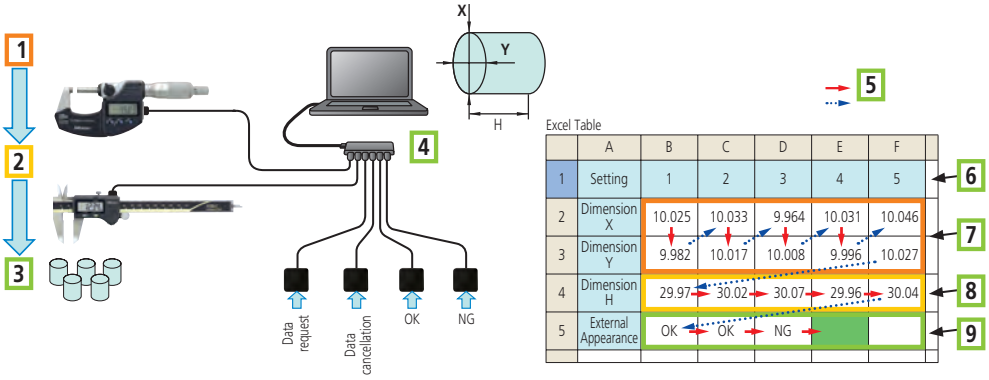

Sequential Measurement

1: Micrometer for diameters X and Y; 2: Caliper for height measurement H; 3: Inspection by attributes OK/NG with foot switch e.g. scratches in the surface; 4: standard USB-Hub; 5 Measurement direction; 6: Workpiece No. 7: Measuring result X/Y; 8: Measuring result H; 9: OK/NG judgement (e.g. scratches)

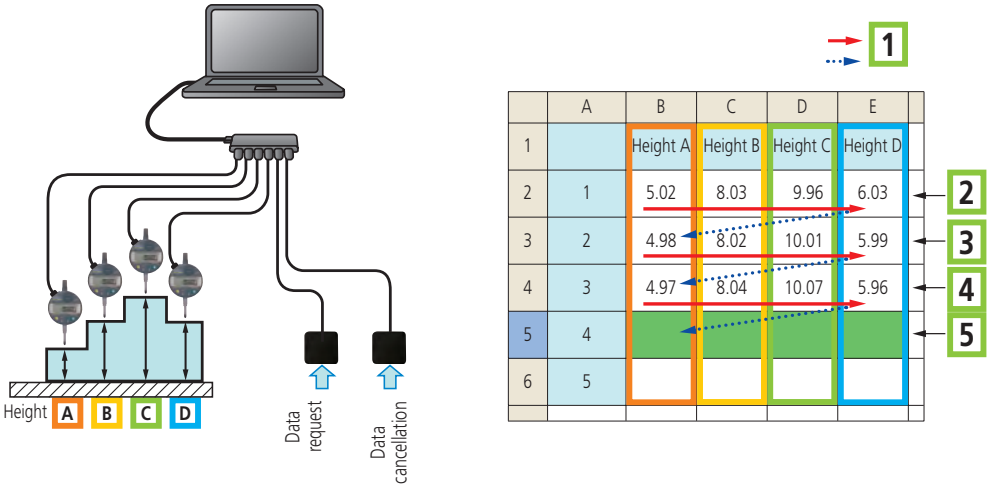

Simultaneous Measurement

1: Measurement direction; 2: First measurement: press foot switch once = 4 complete data batches; 3: second measurement: press foot switch once = 4 complete data batches; 4: third measurement: press foot switch once = 4 complete data batches; 5: is waiting for the next batch measurement

Specifications

OS compatibility	Windows® 2000 Professional (≥SP4), Windows® XP Professional (≥SP2), Windows® XP Home Edition (≥SP2), Windows Vista®/7 (32bit,64bit), Windows® 8, 8 .1, 10 (32bit,64bit)
Applicable MS Excel Version	Microsoft® Excel® 2000/2002/2003/2007/2010/2013/2016
Functions	- setting of Microsoft® Excel® input (workbook, worksheet, cell range a.s.o.) - data collection: USB Input Tool Direct cable wireless communication system U-WAVE - selection of measuring input (sequential, simultaneous, individual) - control of data imput (mouse, foot switch, kexboard) - character string input by foot switch - timer function - measurement time input
Language for display	English, German, French, Italian, Spanish, Turkish, Czech, Polish, Hungarian, Swedish, Russian, Japanese, Korean, Simplified Chinese, Traditional Chinese
Delivered	License Key, Software CD

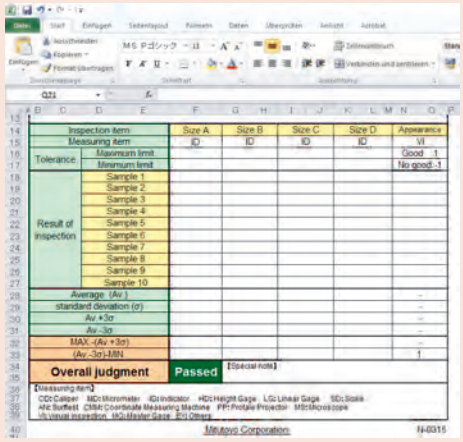

Microsoft® Excel® Worksheet waiting for data

Scan QR Code with your mobile device and watch our product videos on YouTube

All products to be sold to commercial customers. Product illustrations are without obligation. Product descriptions, in particular any and all technical specifications, are only binding when explicitly agreed upon. For suggested retail prices, please refer to the separate price list.

Wireless Communication System: U-WAVE

Series 02AZD

This wireless communication system transfers data directly from a Digimatic measuring instrument to a PC, meaning no more cables are needed.
The U-WAVE offers the following benefits:

- 20 metre communication distance.
- It allows easy data export straight to Microsoft® Excel® or other applications, using the bundled data interface software.
- Data transfer is confirmed by the transmitter through a buzzer or LED.
- An IP67 transmitter is available.
- You can make 400000 data transmissions with a single battery.
- By using special software it will also support a data request from a PC (Event Drive mode). This is ideal if there is no one operating the measuring tool, or if it is installed at an inaccessible side.

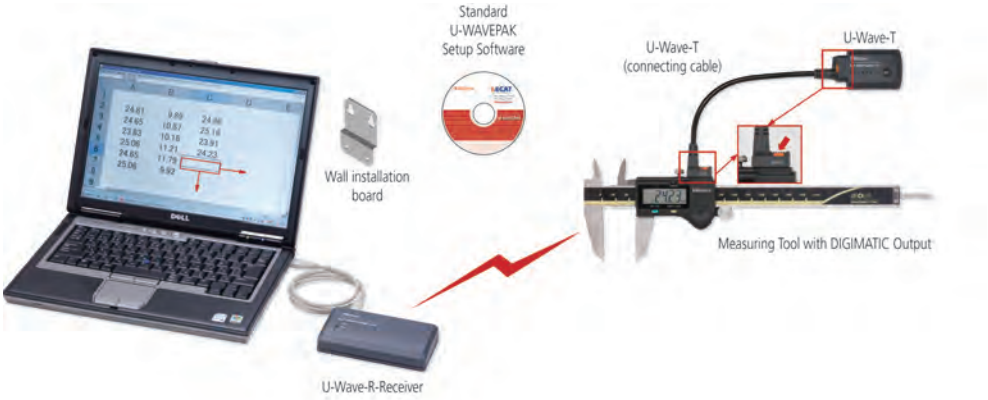

Specifications

Wireless communication protocol	IEEE 802. 15. 4
Modulation method	DS-SS (Direct Sequence Spread Spectrum)
Communication distance	Approx. 20 m line of sight
Communication speed kbps	250
Communication frequency	2,4 GHz (ISM: universal frequency band)
User band	15 channels (2,405 to 2,475GHz at intervals of 5 MHz)
OS compatibility	Windows® 2000 Professional (≥SP4), Windows® XP Professional (≥SP2), Windows® XP Home Edition (≥SP2), Windows Vista®, Windows® 7 (32bit, 64bit), Windows® 8, 8. 1, 10 (32bit, 64bit)

Standard accessories

No.	Description
02AZD770	Clip for Cable Fixing - U-WAVE T
05CZA619	Screw Driver
05SAA217D	Lithium battery CR-2032, 1 pcs.

Optional accessories

No.	Description
937179T	Footswitch for SPC
02AZE200	Holder for U-WAVE T
02NDB003	U-WAVE Event Drive, 64 bit Version
63BAA057	U-WAVE T External Power Supply Adapter
06AFM386	USB-ITPAK Version 2.1

Consumable spares

No.	Description
05SAA217D	Lithium battery CR-2032, 1 pcs.

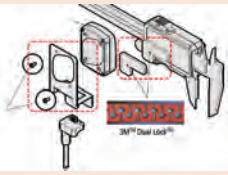

02AZE200 : Holder for caliper, micrometer and dial indicator.

U-Wave-R

U-WAVE-T

*The Event Drive Mode will reduce the battery life. With power supply adapter (63BAA057) external power supply can be provided.

Receiver U-WAVE R

No.	Remarks	Software	Number of U-WAVE-R units that can be connected to PC	Number of U-Wave-T units that can be connected	USB Cable length [m]	Dimensions (WxDxH) [mm]	Mass [g]
02AZD810D	U-WAVE R + Software	U-WAVE PAK	Up to 16	Up to 100	1	140 x 80 x 31,6	130

Transmitter U-WAVE T

No.	Remarks	Data reception indication	Battery life	Dimensions (WxDxH) [mm]	Mass [g]
02AZD730D	IP67 model	LED	400 000 transmissions	44 x 29,6 x 18,5	23
02AZD880D	Standard model	LED and buzzer	400 000 transmissions	44 x 29,6 x 18,5	23

Scan QR Code with your mobile device and watch our product videos on YouTube

All products to be sold to commercial customers. Product illustrations are without obligation. Product descriptions, in particular any and all technical specifications, are only binding when explicitly agreed upon. For suggested retail prices, please refer to the separate price list.

U-WAVE Data Cables

Series 02AZD / 02AZE

– This connecting cable connects a measuring tool to its U-WAVE T unit. Choose the appropriate cable for your measuring tool from the seven types below, A to G.

Cable without footswitch connection

Cable with footswitch connection

1 Cable without footswitch connection

No.	Model	Remarks
02AZD790A	A	IP U-WAVE Data Cable Straight With Data Switch e.g. for IP67 Caliper
02AZD790B	B	IP U-WAVE Data Cable Back Side With Data Switch e.g. for IP65 Micrometer
02AZD790C	C	U-WAVE Data Cable Straight With Data Switch e.g. for Standard Absolute Caliper
02AZD790D	D	U-WAVE Data Cable Plain e.g. for IDH/IDF Indicator
02AZD790E	E	U-WAVE Data Cable Round e.g. for Quick Micrometer
02AZD790F	F	U-WAVE Data Cable Straight e.g. for IDC/IDS Indidator
02AZD790G	G	IP U-WAVE Data Cable e.g. for IDN/IDB Indicator

2 Cable with footswitch connection

No.	Model	Remarks
02AZE140A	A	IP U-WAVE Data Cable Straight With Data Switch/FootSwitch Connector e.g. for IP67 Caliper
02AZE140B	B	IP U-WAVE Data Cable Back Side With Data Switch/FootSwitch Connector e.g. for IP65 Micrometer
02AZE140C	C	U-WAVE Data Cable Straight With Data Switch/FootSwitch Connector e.g. for standard Absolute Caliper
02AZE140D	D	U-WAVE Data Cable Plain With FootSwitch Connector e.g. for IDH/IDF Indicator
02AZE140E	E	U-WAVE Data Cable Round With FootSwitch Connector e.g. for Quick Micrometer
02AZE140F	F	U-WAVE Data Cable Straight With FootSwitch Connector e.g. for IDC/IDS Indicator
02AZE140G	G	IP U-WAVE Data Cable With FootSwitch Connector e.g. for IDN/IDB Indicator

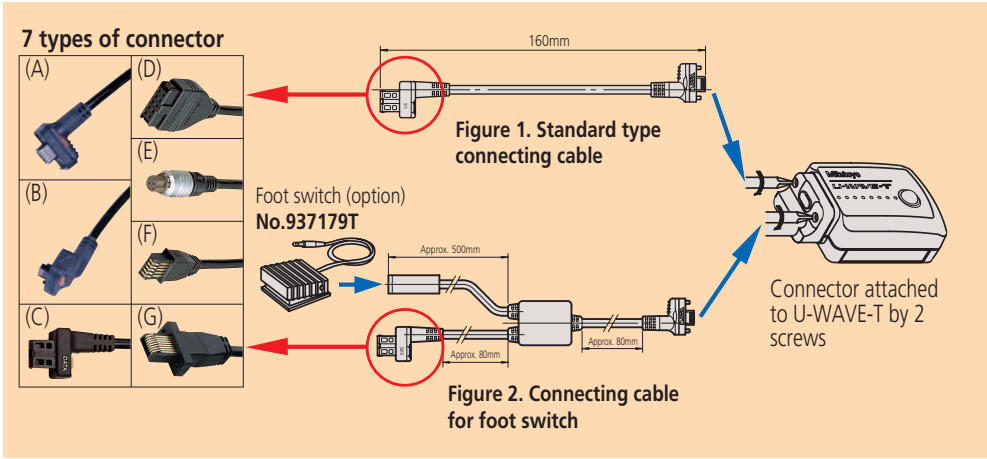

Super Caliper
with 02AZD790A cable

02AZD790A

QuantuMike
with 02AZD790B cable

02AZD790B

Standard Absolute Caliper
with 02AZD790C cable

02AZD790C

Digimatic Indicator ID-H
with 02AZD790D cable

02AZD790D

Quick Micrometer
with 02AZD790E cable

02AZD790E

Digimatic Height Gauge
with 02AZD790F cable

02AZD790F

ABS Digimatic Indicator
ID-N
with 02AZD790G cable

02AZD790G

All products to be sold to commercial customers. Product illustrations are without obligation. Product descriptions, in particular any and all technical specifications, are only binding when explicitly agreed upon. For suggested retail prices, please refer to the separate price list.

USB Input Tool

Series 264 - Keyboard Interface

The input tool allows you to directly connect Digimatic measuring devices to a USB interface, without needing additional software.
The USB Input Tool Direct offers the following benefits:

- Measurement data is converted into keyboard codes, enabling interaction with any program working with keyboard entries. (HID)
- You can also connect to a USB with fixed COM assignment in Microsoft Windows as a channel identification (VCP) with USB IT PAK software only.
- The USB-IT PAK software lets you easily create Microsoft Excel worksheets.

264-016

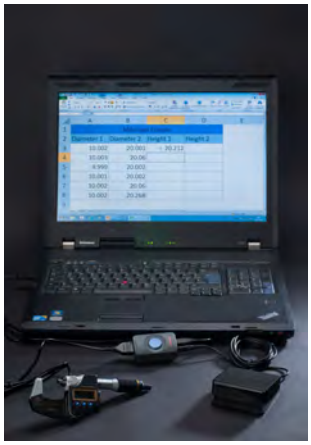

No.	Data input	Data output	Output decimal mark	Footswitch connector	Mass [kg]
264-016	1 x Digimatic	USB Virtual COM-Port (VCP) with USB IT PAK, USB keyboard signal (HID)	Emulates the local setting	Yes	0,56

Specifications

Cable length	1 m
Dimensions (WxDxH)	38 x 64 x 21 mm
Power supply	Bus power
Max. connectable devices	Microsoft® Windows® 2000, XP, Vista®, 7, 8, 8. 1, 10: 20
OS compatibility	Microsoft® Windows® 2000, XP, Vista®, 7, 8, 8. 1, 10 (32bit, 64bit)

Optional accessories

No.	Description
937179T	Footswitch for SPC
06AFM386	USB-ITPAK Version 2.1

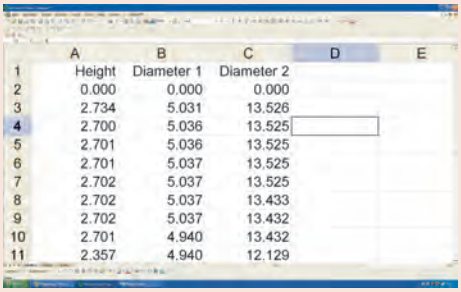

	A	B	C	D	E
1	Height	Diameter 1	Diameter 2		
2	0.000	0.000	0.000		
3	2.734	5.031	13.526		
4	2.700	5.036	13.525		
5	2.701	5.036	13.525		
6	2.701	5.037	13.525		
7	2.702	5.037	13.525		
8	2.702	5.037	13.433		
9	2.702	5.037	13.432		
10	2.701	4.940	13.432		
11	2.357	4.940	12.129		

DMX-3T / FS2 USB

Series 63

Keyboard interface

- The DMX-3 T/FS2 USB is a keyboard interface that transmits measurement data from measuring instruments equipped with Digimatic interfaces to a PC. Measurement data is converted into keyboard codes, allowing you to easily access it with any program working with keyboard entries, regardless of the operating system. The USB and data conversation interfaces also allow you to directly input the measurement data into a spreadsheet.

63AAA041

rear panel

No.	Data input	Data output	Output decimal mark	Footswitch connector	Mass [g]
63AAA041	3 x Digimatic	USB keyboard signal (HID)	point or comma (selectable)	Yes	330

Specifications

Dimensions (WxDxH)	112 x 122 x 45 mm
Timer function	0-99s (1s step) or 0-99min
Power supply	5V from the USB
OS compatibility	Microsoft® Windows® 2000, XP, Vista®, 7, 8, 8. 1, 10 (32bit, 64bit)
Max. no. of cascadable interface	3 via optional link cable

Optional accessories

No.	Description
937179T	Footswitch for SPC
63AAA105	Linkcable DMX-3T/FS2 (300 mm)

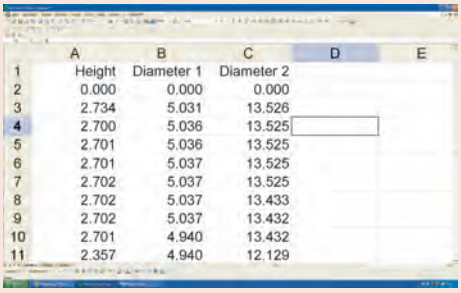

	A	B	C	D	E
1	Height	Diameter 1	Diameter 2		
2	0.000	0.000	0.000		
3	2.734	5.031	13.526		
4	2.700	5.036	13.525		
5	2.701	5.036	13.525		
6	2.701	5.037	13.525		
7	2.702	5.037	13.525		
8	2.702	5.037	13.433		
9	2.702	5.037	13.432		
10	2.701	4.940	13.432		
11	2.357	4.940	12.129		

All products to be sold to commercial customers. Product illustrations are without obligation. Product descriptions, in particular any and all technical specifications, are only binding when explicitly agreed upon. For suggested retail prices, please refer to the separate price list.

DMX-1

Series 63

This DMX-1 D-SUB9 serial interface is a microcontrolled interface for connecting one single measurement device, with Digimatic output, to the RS-232C interface of a computer.
The DMX-1 offers the following benefits:
- Easily connect a measuring device to a computer's RS-232C serial port.
- No external power supply is needed, as the small level of power needed is supplied by the handshake lines RTS and DTR.

No.	Data input	Data output	Interface cable connection	Footswitch connector	Baud rate	Data bits	Stop bits	Parity
63AAA029	1 x Digimatic	RS-232C	D-SUB 9	Yes	9600	8	1	none

Specifications

Dimensions (WxDxH)	58 x 62 x 18 mm

Optional accessories

No.	Description
937179T	Footswitch for SPC
63AAA027	RS-232C Signal Cable, D-Sub9-D-Sub9, 2m

63AAA029

DMX-1 USB

Series 63

- The DMX-1 USB is a micro-controlled interface for connecting 1 Digimatic-output measurement device to the USB interface of a computer. The device appears as a virtual COM-PORT (VCP) to the computer.

63AAA040

rear panel

No.	Data input	Data output	Interface cable connection	Footswitch connector	Baud rate	Data bits	Stop bits	Parity
63AAA040	1 x Digimatic	USB virtual COM-Port (VCP)	USB	Yes	9600	8	1	none

Specifications

Dimensions (WxDxH)	33 x 57 x 20 mm
OS compatibility	Microsoft® Windows® 2000, XP, Vista®, 7, 8, 8. 1, 10 (32bit, 64bit)*
Delivered	USB cable (1,8 m) Driver Software up to Windows® 7*

Optional accessories

No.	Description
937179T	Footswitch for SPC

* Driver Software for Windows® 8, 8. 1, 10; download www.mitutoyo.eu

DMX-2 S

Series 63

This DMX-2 S D-SUB5 serial interface is a microcontrolled interface for connecting two measurement devices, with Digimatic output, to the RS-232C serial port of a computer.
The DMX-2 S offers the following benefits:
- Easily connect two measuring devices to a computer's RS-232C serial port.
- No external power supply is needed, as the small level of power needed is supplied by the handshake lines RTS and DTR.

63AAA038

No.	Data input	Data output	Interface cable connection	Footswitch connector	Baud rate	Data bits	Stop bits	Parity
63AAA038	2 x Digimatic	RS-232C	D-SUB 25	Yes	9600	8	1	none

Specifications

Dimensions (WxDxH)	58 x 62 x 18 mm

Optional accessories

No.	Description
937179T	Footswitch for SPC
63AAA028	Adapter D-Sub25-D-Sub9, 0,2m
63AAA108	RS-232C Signal Cable, D-Sub-25-D-Sub-9, 2m

Sample application with footswitch (optional accessory)

All products to be sold to commercial customers. Product illustrations are without obligation. Product descriptions, in particular any and all technical specifications, are only binding when explicitly agreed upon. For suggested retail prices, please refer to the separate price list.

DMX-2 USB

Series 63

Connecting two measurement devices, with Digimatic-output, to a USB port.
The DMX-2 USB offers the following benefits:
- It appears either as a virtual COM-Port (VCP) or as a keyboard (HID) on the computer.
- It has a mode switch available to easily swap between keyboard format (HID) and virtual COM-Port (VCP).

63AAA037

rear panel

No.	Data input	Data output	Interface cable connection	Footswitch connector	Baud rate	Data bits	Stop bits	Parity
63AAA037	2 x Digimatic	USB virtual COM-Port (VCP) USB keyboard signal (HID) (switchable on the box)	USB	Yes	9600	8	1	none

Specifications

Dimensions (WxDxH)	61 x 76 x 35 mm
OS compatibility	Microsoft® Windows® 2000, XP, Vista®, 7, 8, 8. 1, 10 (32bit, 64bit)*
Output decimal mark (HID)	point or comma
Delivered	USB cable (1,8 m) Driver software up to Windows® 7*

Optional accessories

No.	Description
937179T	Footswitch for SPC

* Driver software for Windows® 8, 8. 1, 10: download www.mitutoyo.eu (Registration is required)

DMX-3 USB

Series 63

The DMX-3 3 channel USB VCP interface/ D-SUB9 serial interface is a microcontrolled interface that connects three measurement devices, with Digimatic output, to either the RS-232C serial port or USB port of a computer.
The DMX-3 USB offers the following benefits:
- If the USB output is used, the measuring device will appear as a virtual COM-Port (VCP) on the computer.
- Power is supplied by an AC/DC adapter, which is a standard accessory only required for serial cable D-Sub 9 connection.

63AAA039

rear panel

No.	Data input	Data output	Interface cable connection	Foot-switch connector	Baud rate	Data bits	Stop bits	Parity
63AAA039	3 x Digi-matic	USB virtual COM-Port (VCP), RS-232C	For serial cable: D-SUB 9 for USB: cable type B	Yes	1200/9600 (adjustable with jumper)	8	1	none

Specifications

Dimensions (WxDxH)	170 x 128 x 55 mm
OS compatibility	Microsoft® Windows® 2000, XP, Vista®, 7, 8, 8. 1, 10 (32bit, 64bit)*
Delivered	USB cable (1,8 m) Driver Software up to Windows® 7* AC Adapter (only for serial cable connection)

Optional accessories

No.	Description
937179T	Footswitch for SPC
63AAA027	RS-232C Signal Cable, D-Sub9-D-Sub9, 2m

* Driver software for Windows® 8, 8. 1, 10: download www.mitutoyo.eu (Registration is required)

All products to be sold to commercial customers. Product illustrations are without obligation. Product descriptions, in particular any and all technical specifications, are only binding when explicitly agreed upon. For suggested retail prices, please refer to the separate price list.

MUX-10F

Series 264

The MUX-10F 4 channel D-SUB9 serial interface is a microcontrolled interface that connects four measurement devices, with Digimatic output, to the RS-232C serial port of a computer.
– You can connect four measurement devices to an RS-232C serial port.

264-002D

rear panel

No.	Data input	Data output	Interface cable connection	Footswitch connector	Baud rate	Data bits	Stop bits	Parity
264-002D	4 x Digimatic	RS-232C	D-SUB 9	Yes	300, 600, 1200, 2400, 9600, 19200	8	1	none

Specifications

Dimensions (WxDxH)	91,4 x 92,5 x 50,4 mm
Delivered	AC Adapter

Optional accessories

No.	Description
937179T	Footswitch for SPC
63AAA027	RS-232C Signal Cable, D-Sub9-D-Sub9, 2m

DMX-8/2

Series 63

The DMX-8/2 8 channel D-SUB9 serial interface is a microcontrolled interface for connecting eight measurement devices, with Digimatic output, to the RS-232C serial port of a computer. The DMX-8/2 model provides power and an ABS/Zero button to operate Series 575 ABS Linear Gauges.

63AAA033

rear panel

No.	Data input	Data output	Interface cable connection	Footswitch connector	Baud rate	Data bits	Stop bits	Parity
63AAA033	8 x Digimatic	RS-232C	D-SUB 9	Yes	9600	8	1	none

Specifications

Dimensions (WxDxH)	158 x 204 x 66 mm
Power supply	220-240V 50Hz
Delivered	Power cable

Optional accessories

No.	Description
937179T	Footswitch for SPC
63AAA027	RS-232C Signal Cable, D-Sub9-D-Sub9, 2m

DMX-16 / DMX-16C

Series 63

– The DMX-16/16C is a micro controlled Interface for connecting 16 Digimatic output measurement devices to the RS-232C interface of a computer
– DMX-16C features integrated microprocessors for data processing, thus enabling simultaneous input and output from all measurement instruments and increasing data processing speed.
– The DMX-16 and DMX-16C provides power and an ABS/ZERO button to operate Series 575 ABS Linear Gauges

No.	Remarks	Type	Data input	Data output	Interface cable connection	Footswitch connector	Baud rate	Data bits	Stop bits	Parity
63AAA026	successive data reception	DMX-16	16 x Digimatic	RS-232C	D-SUB 9	Yes	9600	8	1	none
63AAA106	simultaneous data reception	DMX-16C	16 x Digimatic	RS-232C	D-SUB 9	Yes	9600	8	1	none

Specifications

Power supply	220-240V 50 Hz
Dimensions (WxDxH)	225 x 204 x 75 mm
Delivered	Power cable

Optional accessories

No.	Description
937179T	Footswitch for SPC
63AAA027	RS-232C Signal Cable, D-Sub9-D-Sub9, 2m

63AAA106

rear panel

All products to be sold to commercial customers. Product illustrations are without obligation. Product descriptions, in particular any and all technical specifications, are only binding when explicitly agreed upon. For suggested retail prices, please refer to the separate price list.

DMX-3-2 USB

Series 63

This DMX-3-2 USB is a three channel USB interface for connecting three measurement devices, with Digimatic output, and two devices with RS232C output (such as the Mitutoyo QM-Data 200) to the USB interface of a computer.
The DMX-3-2 USB offers the following benefits:
- It can connect more than 70 different measuring instruments with RS232C output, including Mitutoyo devices as well as other brands (a list is available on request).
- The interface converts the different signals from the connected measuring instruments into the same format: keyboard signal (HID) or virtual COM-Port MUX-10 or MUX-50 (VCP).

63AAA042

Rear panel

No.	Data input	Data output	Footswitch connector	Interface cable connection	Baud rate	Data bits	Stop bits	Parity
63AAA042	3 x Digimatic 2 x RS232C	USB virtual COM-Port (VCP) USB keyboard signal (HID)	Yes	USB	9600	8	1	none

Specifications

Dimensions (WxDxH)	170 x 128 x 55 mm
Timer function	interval 0-99s or 0-99 min
Mitutoyo measuring instruments with RS232C ouput	KA-Counter Protractor Series 950 EH, EF, EV-Counter DP1-VR Linear Height LH-600 QM-Data 200 Litematic VL-50 Laser Scan Micrometer LSM QM-Height MF-Microscope Series PJ A3000 Projector PJ H30 Projector ID-H Indicator
OS compatibility	Microsoft® Windows® 2000, XP, Vista®, 7, 8, 8. 1, 10 (32bit, 64bit)*
Output decimal mark (HID)	point or comma
Max. no. of cascadable interface	3 via optional link cable
Delivered	USB cable (1,8 m) Driver Software up to Windows® 7*

Optional accessories

No.	Description
937179T	Footswitch for SPC
63AAA105	Linkcable DMX-3T/FS2 (300 mm)

* Driver software for Windows® 8, 8. 1, 10: download www.mitutoyo.eu (Registration is required)

Digimatic Timerbox

Series 63

This timerbox allows you to connect to the footswitch connector of a Mitutoyo interface to trigger data transfer, based on a time interval.
The Digimatic Timerbox offers the following benefits:
- Software neutral for all applications.
- It can be used with all Mitutoyo interfaces featuring 3,5mm TRS Foot switch connectors (Mono) such as USB Input Tool Direct.
- It works as a time-controlled footswitch.

Specifications

Dimensions (WxDxH)	55 x 58 x 31 mm
Power supply	AC-Adapator 10 V, 120mA or USB bus power
Timer function	1s-99h 59 min 59s (100h)
Timer tolerance	±8s/24h
Delivered	USB connection cable (0,8 m) AC adaptor Footswitch cable TTB1 (0,52 m)
Mass	84 g

Sample application with DMX Box

63AAA107

Sample application with USB Input Tool Direct

No.
63AAA107

All products to be sold to commercial customers. Product illustrations are without obligation. Product descriptions, in particular any and all technical specifications, are only binding when explicitly agreed upon. For suggested retail prices, please refer to the separate price list.

Digimatic Display Unit

Series 542

For devices equipped with SPC Digimatic output:
- Micrometer
- Indicator
- Caliper
- etc...

542-007D

542-072D

542-016

542-093-2

For more details (functions a.s.o) please refer to counters and displays under "Linear Gages".

Digimatic Data Logger

Series 63

The Digimatic DL-1000 and 1000 M are data loggers designed for storing measurement data recorded by a Digimatic measuring instrument for subsequent output to a computer. They allow you to collect data when away from a PC, and transfer it later.
These Digimatic Data Loggers offer the following benefits:
- The measuring device is connected to the I/O port of the DL-1000/1000 M with a data cable, and you can transmit data either using the data button on the measuring device or on the DL-1000/1000 M.
- For data transfer the devices are connected via an interface to the target computer.
- Data transfer from the DL-1000/1000 M is executed with the data button or footswitch of an interface or upon request from the respective software. The DL-1000/1000 M is recognised by the measurement device as a Digimatic measurement instrument.
- You can output data directly to a printer equipped with a Digimatic interface.

63AAA031

No.	Remarks	Type	Mass [g]
63AAA031	Data collection and transmission	DL-1000	130
63AAA032	Sample or feature related data collection and transmission	DL-1000 M	130

Specifications

Memory	**DL-1000/1000 M**: Up to 999 measurement values can be stored by these data loggers. **DL-1000 M**: Sample or feature-related operation is possible. A maximum of 100 features from 9 samples can be stored. If the number of features is reduced the number of samples available is increased. Based on the number of features, the **DL-1000 M** will automatically calculate how many samples are available. For example, 10 measured features means that a maximum of 99 samples can be stored.
Data format	All data are loaded or output in Mitutoyo Digimatic compatible format.
Connection to measuring instrument	To output measurement values, a **DL-1000/1000 M** can be connected to any interface or protocol printer which allows connection to Mitutoyo Digimatic compatible measuring instruments.
Delivered	1 x 9V lithium battery Data cable 10-pole to 10-pole (0,25m)

Optional accessories

No.	Description
936937	Digimatic Cable, Flat 10-Pin Type, 1 m
965014	Digimatic Cable, Flat 10-Pin Type, 2 m
06ADV380D	USB Input Tool Direct (Digimatic USB) cable, Flat 10-Pin Type, 2 m

All products to be sold to commercial customers. Product illustrations are without obligation. Product descriptions, in particular any and all technical specifications, are only binding when explicitly agreed upon. For suggested retail prices, please refer to the separate price list.

Digimatic Switch Box

Series 63/939

This switch box is a distribution box that connects 3-5 Digimatic tools to one channel interface (for example a DMX-1 USB).
The Digimatic Switch Box offers the following benefits:
- It can connect 3-5 Digimatic tools to a single channel interface.
- This can be either a single Digimatic display unit or an interface box.

63AAA030

939039

No.	Data output	Data input	Footswitch connector
63AAA030	1 x Digimatic (1 channel)	5 x Digimatic	Yes
939039	1 x Digimatic (1 channel)	3 x Digimatic	No

Specifications

Delivered	AC-Adapter (011235 only)

Optional accessories

No.	Description
936937	Digimatic Cable, Flat 10-Pin Type, 1 m
965014	Digimatic Cable, Flat 10-Pin Type, 2 m
937179T	Footswitch for SPC

937179T only for 011235

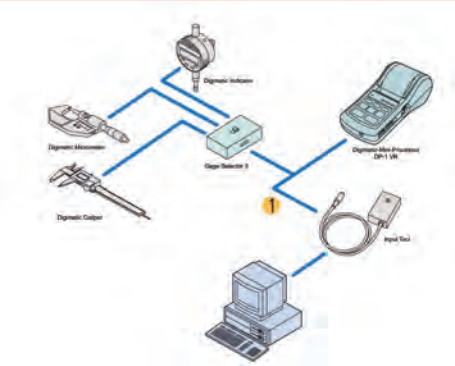

1 - cable 936937 (1m), 965014 (2m)

Digimatic Tolerance Box

Series 011

This tolerance box allows you to connect Digimatic measuring instruments for visual GO/NG evaluations.
The Digimatic Tolerance Box offers the following benefits:
- Simple connection to Digimatic measuring instruments.
- Simple representation of a tolerance evaluation -NG/GO/+NG.
- It can be powered by AC adapter (as a standard accessory) or two LR6 batteries.
- Tolerance setting with the measuring instrument.

011516

No.
011516

Specifications

Dimensions (WxDxH)	117 x 73 x 24 mm
Delivered	With AC adapter

Optional accessories

No.	Description
011037	Battery LR6 (AA) 4x

All products to be sold to commercial customers. Product illustrations are without obligation. Product descriptions, in particular any and all technical specifications, are only binding when explicitly agreed upon. For suggested retail prices, please refer to the separate price list.

Digimatic Micrometers and Mechanical Micrometers
Page 35

Micrometers Accessories
Page 94

Micrometer Heads
Page 103

Micrometer Head Accessories
Page 127

All products to be sold to commercial customers. Product illustrations are without obligation. Product descriptions, in particular any and all technical specifications, are only binding when explicitly agreed upon. For suggested retail prices, please refer to the separate price list.

High Accuracy Digital Micrometer

Functions	Series 293
ON/OFF	●
Auto Power OFF after 20 min. non use	●
Low voltage alarm	●
Function lock	●
HOLD	●
Data output	●
PRESET	●
Resolution switching	●

Specifications

Accuracy	Refer to the list of specifications (excluding quantizing error)
Measuring force	7-9 N
Flatness	0,3 µm
Parallelism	0,6 µm
Measuring surface	ø3,2 mm, carbide tipped, micro-lap finish
Measuring spindle	With spindle lock, ø6,35 mm, 0,5 mm spindle pitch
Power supply	Lithium battery (CR2032) x 1
Measuring system	Electromagnetic induction type ABS rotary sensor
Battery life	approx. 2 years
Delivered	Including box, key, driver, 1 battery, heat insulating cover, certificate of inspection

Optional accessories

No.	Description
05CZA662	Digimatic Cable with Data Button IP Type, 1m, Micrometer Type
05CZA663	Digimatic Cable with Data Button IP Type, 2m, Micrometer Type
06ADV380B	USB Input Tool Direct (Digimatic USB), with Data Button IP Micrometer Type
02AZD790B	U-WAVE T Connection Cable B, with Data Button IP Micrometer Type

Consumable spares

No.	Description
05SAA217D	Lithium battery CR-2032, 1 pcs.

0,1µm digital step

Scan QR Code with your mobile device and watch our product videos on YouTube

Series 293

This Micrometer enables 0,1µm resolution measurements and is ideal for customers who need to make highly accurate measurements with a hand-held tool (such as Gauge R & R analysis).
The Absolute High-Accuracy Micrometer offers the following benefits:

- It delivers higher accuracy without sacrificing operability, by using Mitutoyo's innovative 0,1 µm resolution ABS (absolute) rotary sensor and high accuracy screw machining technology which reduces instrumental error to just 0,5 µm.
- Its highly rigid frame and high-performance constant-force mechanism (7-9N) enable more stable measurement.

High Accuracy Micrometer
with heat insulating cover (standard accessory)

Metric

No.	Range [mm]	Digital step	Instrumental error	Mass [g]
293-100	0-25	0,0001 mm/ 0,0005 mm (switchable)	±0,5 µm	400

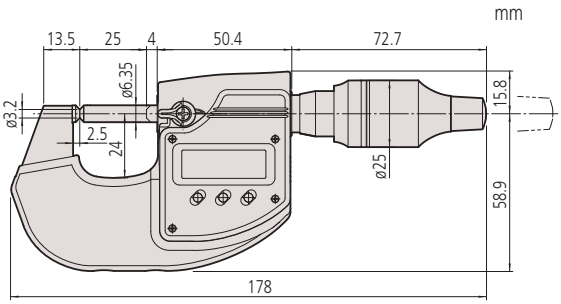

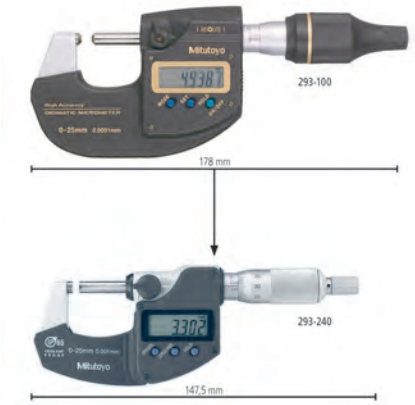

Comparative sizes:
High Accuracy-Micrometer with a highly rigid frame and a common Micrometer with a standard frame

All products to be sold to commercial customers. Product illustrations are without obligation. Product descriptions, in particular any and all technical specifications, are only binding when explicitly agreed upon. For suggested retail prices, please refer to the separate price list.

Digimatic Micrometer QuantuMike IP65

Series 293

This is a micrometer with a 2mm spindle pitch, offering movement four times as fast as a standard micrometer.
The Digimatic Micrometer QuantuMike IP65 offers the following benefits:

- Faster measurement is achieved by using a coarser thread which feeds the spindle by 2mm per thimble rotation.
- It delivers approximately four times as fast as standard micrometer with 0,5mm spindle pitch.
- The device has outstanding accuracy, with only ±1µm instrumental error (75mm or less measuring range models).
- The dual function offered by the ratchet on the thimble and the fast drive mechanism ensure easy single-handed or stand operation.
- Excellent resistance against water and dust (IP65 protection level) enables this micrometer to be used in machining situations that include splashing coolant fluid.

Dust- and Waterproof IP65
www.tuv.com ID 4011207400

Only for 0-25, 25-50 mm

QuantuMike®

293-140-30

Coloured speeders

Functions	Series 293
ORIGIN (until 100 mm)	●
ZERO/ABS	●
Auto Power OFF after 20 min. non use	●
Low voltage alarm	●
Function lock	●
HOLD	●

Specifications

Accuracy	Refer to the list of specifications (excluding quantizing error)
Measuring force	7-12 N
Digital step	0,001 mm
Flatness	0,3 µm
Parallelism	1 µm for models up to 50 mm 2 µm for models up to 100 mm
Measuring surfaces	carbide-tipped, micro-lap finish
Measuring spindle	With spindle lock, ø6,35mm, 2 mm spindle pitch
Battery life	approx. 2,4 years
Delivered	Including box, key, 1 battery, setting standard (from 25 mm upward), certificate of inspection (0-50 mm range)

Metric

No.	Range [mm]	Accuracy [µm]	Data output	L [mm]	a [mm]	b [mm]	Mass [g]
293-140-30	0-25	±1	●	0	9	25	265
293-145-30	0-25	±1		0	9	25	265
293-141-30	25-50	±1	●	25	9,8	32	325
293-146-30	25-50	±1		25	9,8	32	325
293-142-30	50-75	±1	●	50	12,6	47	465
293-147-30	50-75	±1		50	12,6	47	465
293-143-30	75-100	±2	●	75	14	60	620
293-148-30	75-100	±2		75	14	60	620

Optional accessories

No.	Description
05CZA662	Digimatic Cable with Data Button IP Type, 1m, Micrometer Type
05CZA663	Digimatic Cable with Data Button IP Type, 2m, Micrometer Type
02AZD790B	U-WAVE T Connection Cable B, with Data Button IP Micrometer Type
06ADV380B	USB Input Tool Direct (Digimatic USB), with Data Button IP Micrometer Type
04GAA900	Color speeder, for Ratched Thimble Red
04GAA901	Color speeder, for Ratched Thimble Yellow
04GAA902	Color speeder, for Ratched Thimble Green
04GAA903	Color speeder, for Ratched Thimble Blue
04AAB208	Color speeder, for Ratched Thimble Grey

Consumable spares

No.	Description
938882	Battery SR44 1.5V
04GAA899	Color speeder, for Ratched Thimble Black

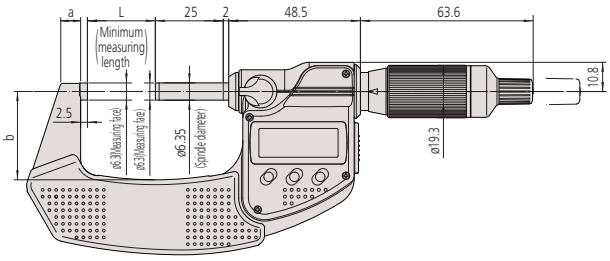

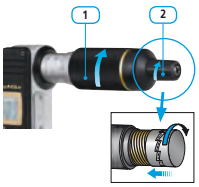

1 : Ratchet on thimble
2 : Ratchet on speeder

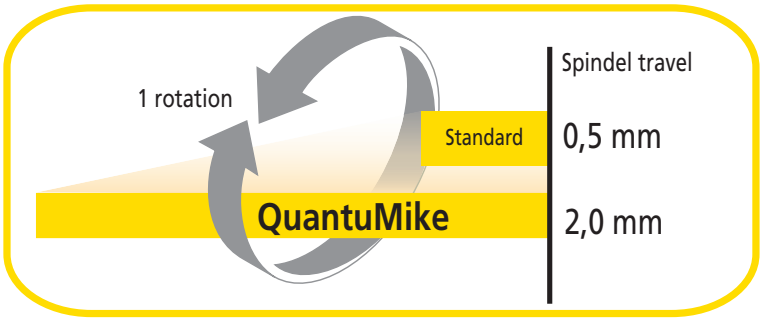

Scan QR Code with your mobile device and watch our product videos on YouTube

All products to be sold to commercial customers. Product illustrations are without obligation. Product descriptions, in particular any and all technical specifications, are only binding when explicitly agreed upon. For suggested retail prices, please refer to the separate price list.

Digimatic Micrometer IP65 Metric

Series 293

This metric micrometer offers outstanding accuracy, with and without data input, and is highly robust.
The Digimatic Micrometer IP65 Metric offers the following benefits:
– Outstanding accuracy with just ±1µm instrumental error (75mm or less measuring range models).

Dust- and Waterproof IP65
www.tuv.com ID 4011207400

Only for 0-25, 25-50 mm

293-234-30 with ratched thimble

293-230-30 with ratched stop

293-252-30

Excellent resistance against water and dust IP65

Functions	Series 293
ORIGIN (until 100 mm)	●
ZERO/ABS	●
2 x PRESET (over 100 mm)	●
Auto Power OFF after 20 min. non use	●
Low voltage alarm	●
Function lock	●
HOLD	●

Specifications

Accuracy	Refer to the list of specifications (excluding quantizing error)
Scale	Thimble and sleeve satin chrome finish, ø18 mm
Measuring force	5-10 N
Digital step	0,001 mm
Flatness	0,3 µm
Parallelism	1 µm for models up to 50 mm 2 µm for models up to 100 mm 3 µm for models up to 175 mm 4 µm for models up to 275 mm 5 µm for models over 300 mm
Measuring surfaces	carbide-tipped, micro-lap finish
Measuring spindle	With spindle lock, ø 6,35 mm, spindle pitch 0,5 mm
Battery life	approx. 2,4 years for models up to 100 mm 1,2 years for >100mm
Delivered	Including box, key, 1 battery, setting standard (from 25 mm upward) certificate of inspection (0-50mm range)

Optional accessories

No.	Description
05CZA662	Digimatic Cable with Data Button IP Type, 1m, Micrometer Type
05CZA663	Digimatic Cable with Data Button IP Type, 2m, Micrometer Type
02AZD790B	U-WAVE T Connection Cable B, with Data Button IP Micrometer Type
06ADV380B	USB Input Tool Direct (Digimatic USB), with Data Button IP Micrometer Type

Consumable spares

No.	Description
938882	Battery SR44 1.5V

Improved Battery Life (approx. 8700 hours continous use)

Scan QR Code with your mobile device and watch our product videos on YouTube

Metric — With ratchet stop

No.	Range [mm]	Accuracy [µm]	Data output	L [mm]	a [mm]	b [mm]	c [mm]	Mass [g]
293-230-30	0-25	±1	●	0	6,5	25	2,5	270
293-240-30	0-25	±1		0	6,5	25	2,5	270
293-231-30	25-50	±1	●	25	7,3	32,5	2,5	330
293-241-30	25-50	±1		25	7,5	32,5	2,5	330
293-232-30	50-75	±1	●	50	10,1	47	2,5	470
293-242-30	50-75	±1		50	10,1	47	2,5	470
293-233-30	75-100	±2	●	75	11,5	60	2,5	625
293-243-30	75-100	±2		75	11,5	60	2,5	625
293-250-30	100-125	±2	●	100	16,7	76	5,3	600
293-251-30	125-150	±2	●	125	18,8	90	5,7	740
293-252-30	150-175	±3	●	150	19,1	103	6,1	800
293-253-30	175-200	±3	●	175	18,2	115	6,3	970
293-254-30	200-225	±3	●	200	16,8	126	6,7	1100
293-255-30	225-250	±4	●	225	18	139	5,5	1270
293-256-30	250-275	±4	●	250	18	152	6,5	1340
293-257-30	275-300	±4	●	275	18	166	6,5	1540

Dimensions see next page

Metric — With ratchet thimble

No.	Range [mm]	Accuracy [µm]	Data output	L [mm]	a [mm]	b [mm]	c [mm]	Mass [g]
293-234-30	0-25	±1	●	0	6,5	25	2,5	270
293-244-30	0-25	±1		0	6,5	25	2,5	270
293-235-30	25-50	±1	●	25	7,3	32,5	2,5	330
293-245-30	25-50	±1		25	7,3	32,5	2,5	330
293-236-30	50-75	±1	●	50	10,1	47	2,5	470
293-246-30	50-75	±1		50	10,1	47	2,5	470
293-237-30	75-100	±2	●	75	11,5	60	2,5	625
293-247-30	75-100	±2		75	11,5	60	2,5	625

Dimensions see next page

All products to be sold to commercial customers. Product illustrations are without obligation. Product descriptions, in particular any and all technical specifications, are only binding when explicitly agreed upon. For suggested retail prices, please refer to the separate price list.

Digimatic Micrometer IP65 Metric

Series 293 - Micrometers in set

This metric micrometer offers outstanding accuracy, with and without data input, and is highly robust.

Dust- and Waterproof IP65

only for 0-25mm, 25-50mm

293-963-30

Metric

Set/With ratchet stop

No.	Range [mm]	Data output	Set combination
293-966-30	0-50	●	293-230-30 / 293-231-30 + setting standard 25 mm made of ceramics
293-962-30	0-75	●	293-230-30 / 293-231-30 / 293-232-30 + setting standard 25 mm and 50 mm
293-963-30	0-100	●	293-230-30 / 293-231-30 / 293-232-30 / 293-233-30 + setting standard 25 mm, 50 mm and 75 mm

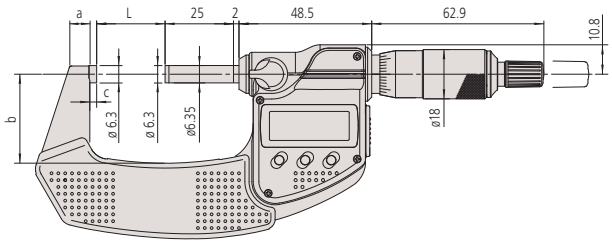

Ratchet stop

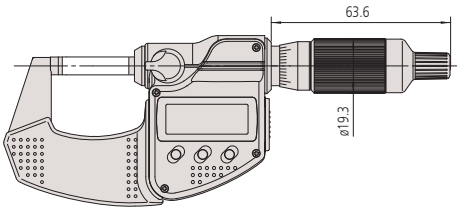

Ratchet thimble

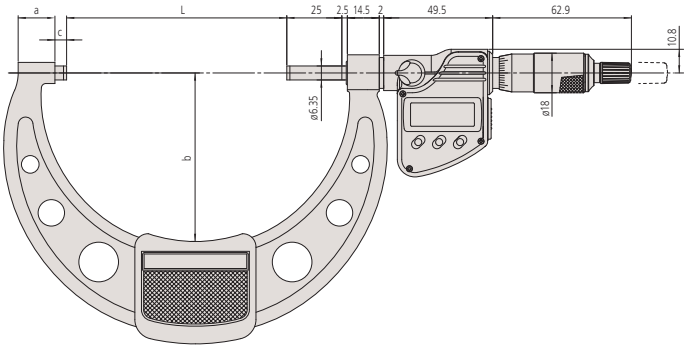

Ratchet stop type over 100 mm

Functions	Series 293 - Micrometers in set
ORIGIN (until 100 mm)	●
ZERO/ABS	●
Auto Power OFF after 20 min. non use	●
Low voltage alarm	●
Function lock	●
HOLD	●

Specifications

Accuracy	See individual types
Scale	Thimble and sleeve satin chrome finish, ø18 mm
Measuring force	5-10 N
Digital step	0,001 mm
Flatness	0,3 µm
Parallelism	1 µm for models up to 50 mm 2 µm for models up to 100 mm
Measuring surfaces	carbide-tipped, micro-lap finish
Measuring spindle	With spindle lock, ø 6,35 mm, spindle pitch 0,5 mm
Battery life	approx. 2,4 years
Delivered	Including box, key, batteries, setting standard (from 25 mm upward) certificate of inspection (0-50 mm range)

Optional accessories

No.	Description
05CZA662	Digimatic Cable with Data Button IP Type, 1m, Micrometer Type
05CZA663	Digimatic Cable with Data Button IP Type, 2m, Micrometer Type
02AZD790B	U-WAVE T Connection Cable B, with Data Button IP Micrometer Type
06ADV380B	USB Input Tool Direct (Digimatic USB), with Data Button IP Micrometer Type

Consumable spares

No.	Description
938882	Battery SR44 1.5V

All products to be sold to commercial customers. Product illustrations are without obligation. Product descriptions, in particular any and all technical specifications, are only binding when explicitly agreed upon. For suggested retail prices, please refer to the separate price list.

Digimatic Micrometer 300-500 mm

Series 293

The Digimatic Micrometer 300-500mm has a measuring range of 300-500mm and offers the following benefits:
- The micrometer's 330° rotatable display unit enables easy reading in all measurement positions.
- 300-500mm measuring range.

Functions	Series 293
ZERO/ABS	●
2 x PRESET (over 100 mm)	●
Auto Power OFF after 20 min. non use	●
Low voltage alarm	●
Function lock	●
Data output	●
HOLD	●

Specifications

Accuracy	Refer to the list of specifications (excluding quantizing error)
Scale	Thimble and sleeve satin chrome finish
Measuring force	10-14 N
Digital step	0,001 mm
Flatness	0,6 µm
Parallelism	5 µm for models up to 375 mm 6 µm for models up to 475 mm 7 µm for models up to 500 mm
Measuring surfaces	Carbide tipped, micro lap finish
Measuring spindle	with spindle lock, ø 8 mm, sindle pitch 0,5 mm
Battery life	approx. 1,8 years
Delivered	Including box, setting standard, key, 2 batteries

Optional accessories

No.	Description
04AZB512	Digimatic Cable, Straight, Data Button, 1m
04AZB513	Digimatic Cable, Straight, Data Button, 2m
959149	Digimatic Cable, Straight, Data Button, 1m
959150	Digimatic Cable, Straight, Data Button, 2m
02AZD790C	U-WAVE T Connection Cable C, Straight, with Data Button
06ADV380C	USB Input Tool Direct (Digimatic USB), Straight, with Data Button

Consumable spares

No.	Description
938882	Battery SR44 1.5V

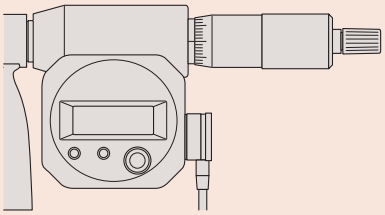

Cable orientation downwards
04AZB512, 04AZB513

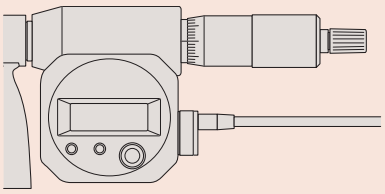

Cable orientation in thimble direction
959149, 959150

293-582

Metric

No.	Range [mm]	Accuracy [µm]	L [mm]	a [mm]	Mass [g]
293-582	300-325	±6	353	187	2000
293-583	325-350	±6	378	199	2150
293-584	350-375	±6	403	212	2300
293-585	375-400	±7	428	224	2450
293-586	400-425	±7	453	236	2600
293-587	425-450	±7	478	248	2750
293-588	450-475	±8	503	261	2900
293-589	475-500	±8	528	273	3100

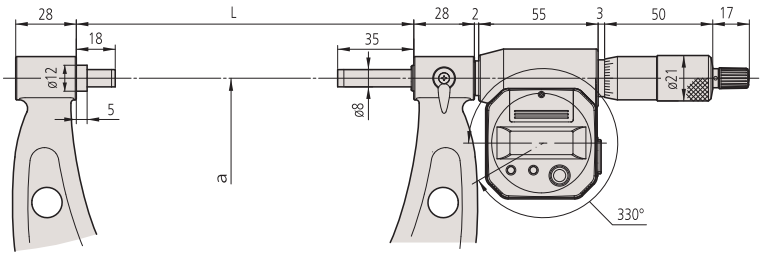

The display is 330° rotatable

All products to be sold to commercial customers. Product illustrations are without obligation. Product descriptions, in particular any and all technical specifications, are only binding when explicitly agreed upon. For suggested retail prices, please refer to the separate price list.

Digimatic Micrometer

Series 293

This standard model Digimatic Micrometer is an affordable device that offers the following benefits:

- Cost-effective with simplified functionality for standard applications.
- Without data output.
- It is available with a ratchet stop or friction thimble for a constant measuring force.

293-821-30

Metric

With ratchet stop

No.	Range [mm]	Accuracy [µm]	Mass [g]
293-821-30	0-25	±2	275

Also available! Inch/Metric Models

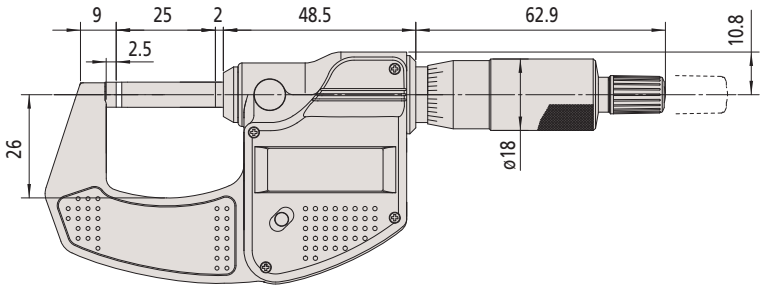

Functions	Series 293
ORIGIN	●
Auto Power OFF after 20 min. non use	●
Low voltage alarm	●

Specifications

Accuracy	Refer to the list of specifications (excluding quantizing error)
Measuring force	5-10 N
Digital step	0,001 mm
Scale	Thimble and sleeve satin chrome finish ø18 mm
Flatness	0,3 µm
Parallelism	2 µm
Measuring surfaces	Carbide tipped, micro-lap finish
Measuring spindle	ø 6,35 mm, spindle pitch 0,5 mm
Battery life	approx. 2,4 years (approx. 8700 hours)
Delivered	Including box, key, 1 battery Certificate of inspection

Consumable spares

No.	Description
938882	Battery SR44 1.5V

All products to be sold to commercial customers. Product illustrations are without obligation. Product descriptions, in particular any and all technical specifications, are only binding when explicitly agreed upon. For suggested retail prices, please refer to the separate price list.

Outside Micrometer Non-Rotating Spindle Type

Functions	Series 406
ORIGIN	●
ZERO/ABS	●
Auto Power OFF after 20 min. non use	●
Low voltage alarm	●
Function lock	●
Data output	●
HOLD	●

Specifications

Accuracy	Refer to the list of specifications (excluding quantizing error)
Scale	Thimble and sleeve satin chrome finish ø 18 mm
Measuring force	3-8 N
Digital step	0,001 mm
Flatness	0,3 µm
Parallelism	3 µm for models up to 75 mm 4 µm for models over 75 mm
Measuring surfaces	carbide-tipped, micro-lap finish
Measuring spindle	With spindle lock, ø 6,35 mm, spindle pitch 0,5mm
Battery life	approx. 2,4 years
Delivered	Including box, setting standard (from 25 mm upward), key

Optional accessories

No.	Description
05CZA662	Digimatic Cable with Data Button IP Type, 1m, Micrometer Type
05CZA663	Digimatic Cable with Data Button IP Type, 2m, Micrometer Type
02AZD790B	U-WAVE T Connection Cable B, with Data Button IP Micrometer Type
06ADV380B	USB Input Tool Direct (Digimatic USB), with Data Button IP Micrometer Type

Consumable spares

No.	Description
938882	Battery SR44 1.5V

Series 406

This micrometer features a non-rotating spindle, and offers the following benefits:
- Sliding spindle, not rotating.
- Ratchet stop.
- Data output.

406-250-30

Metric

No.	Range [mm]	Accuracy [µm]	L [mm]	a [mm]	b [mm]	c [mm]	Mass [g]
406-250-30	0-25	±3	0	7	32	2,8	330
406-251-30	25-50	±3	25	9,8	47	2,8	470
406-252-30	50-75	±3	50	11,2	60	2,8	625
406-253-30	75-100	±4	75	14,6	57	2,3	460

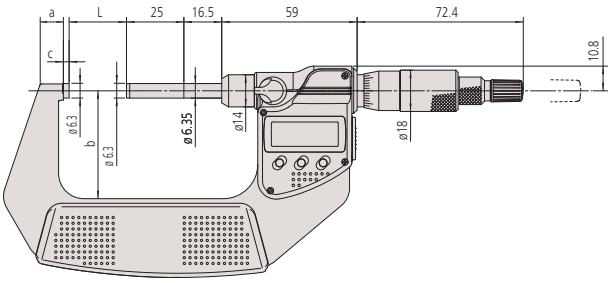

0 - 75 mm

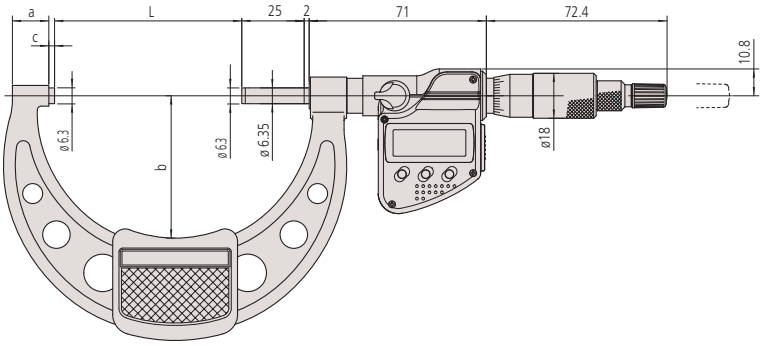

75 - 100 mm

All products to be sold to commercial customers. Product illustrations are without obligation. Product descriptions, in particular any and all technical specifications, are only binding when explicitly agreed upon. For suggested retail prices, please refer to the separate price list.

ABSOLUTE Digimatic Micrometer QuickMike

Series 293

This quick-action type micrometer, with a non-rotating spindle, delivers much faster adjustment types than standard models. The ABSOLUTE Digimatic Micrometer QuickMike offers the following benefits:

- With 10mm feed per revolution (with 0,5mm spindle pitch), it delivers twenty times as fast as standard devices.
- IP54 protection allows a wider range of operating environments (this only applies when a data cable is not fitted).
- ABSOLUTE linear scale means no restriction on adjustment speed.
- It also has a larger measuring range - 30mm compared with 25mm - than standard micrometer.

293-666

293-667

293-668

293-669

Metric

No.	Range [mm]	Accuracy [µm]	L [mm]	a [mm]	b [mm]	c [mm]	Mass [g]
293-661-10	0-30	±2	34,8	2,8	6,2	25	275
293-666	0-30	±2	34,8	2,8	6,2	25	275
293-667	25-55	±2	59,8	2,8	8,5	36	355
293-668	50-80	±3	84,8	2,8	10,3	47	525
293-669	75-105	±3	109,8	2,8	10,7	60	625

Also available! Inch/Metric Models

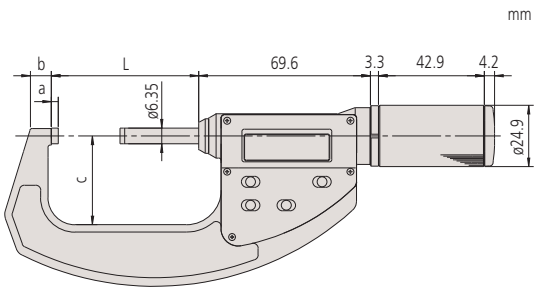

Functions	Series 293 293-661-10	293-666	293-667 up to 293-669
ORIGIN	●	●	●
ZERO/ABS			●
ON/OFF	●	●	●
Low voltage alarm	●	●	●
Data output		●	●
HOLD		●	●

Specifications

Accuracy	Refer to the list of specifications (excluding quantizing error)
Measuring force	5-10 N
Digital step	0,001 mm
Flatness	0,3 µm
Parallelism	2 µm for models up to 80 mm 3 µm for models up to 105 mm
Measuring surfaces	Carbide tipped, micro-lap finish
Measuring spindle	ø6,35 mm, non-rotating, 10 mm pitch
Battery life	approx. 3 years (0-30 mm), 1 year (> 30 mm)
Delivered	Including box, setting standard (from 25 mm upward), 1 battery

Optional accessories

No.	Description
937387	Digimatic Cable, Round 6-Pin Type, 1 m
965013	Digimatic Cable, Round 6 -Pin Type, 2m
02AZD790E	U-WAVE T Connection Cable E, Round 6-Pin Type
06ADV380E	USB Input Tool Direct (Digimatic USB) cable, 2m, Round 6-Pin Type

Consumable spares

No.	Description
938882	Battery SR44 1.5V

293-666 with fixing device 156-105-10 (optional accessories)

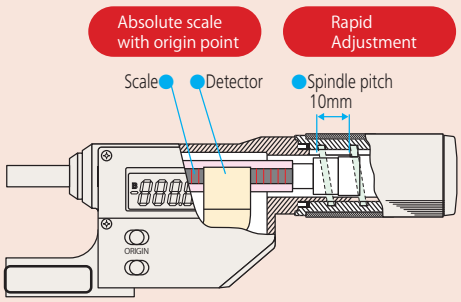

This micrometer has a spindle mechanism enabling a spindle drive of 10 mm/rev.
The drive rate is therefore twenty times as fast as conventional micrometers.

All products to be sold to commercial customers. Product illustrations are without obligation. Product descriptions, in particular any and all technical specifications, are only binding when explicitly agreed upon. For suggested retail prices, please refer to the separate price list.

ABSOLUTE Digimatic Micrometer QuickMike

Functions	Series 227 227-201 227-205	Series 227 227-203 up to 227-207
ORIGIN	●	
ZERO/ABS		●
ON/OFF	●	●
Low voltage alarm	●	●
Data output	●	●
PRESET		●
HOLD	●	●

Specifications

Measuring direction	horizontal
Accuracy	Refer to the list of specifications (excluding quantizing error)
Digital step	0,001 mm
Flatness	0,3 µm
Measuring surfaces	carbide-tipped, micro-lap finish
Measuring spindle	ø 6,35 mm, non-rotating, 10 mm pitch
Parallelism	2 µm
Battery life	Approx. 1 year, approx. 3 years (227-205)
Delivered	Including box, setting standard (for 10-30 mm models), screwdriver, 1 battery

Optional accessories

No.	Description
937387	Digimatic Cable, Round 6-Pin Type, 1 m
965013	Digimatic Cable, Round 6 -Pin Type, 2m
02AZD790E	U-WAVE T Connection Cable E, Round 6-Pin Type
06ADV380E	USB Input Tool Direct (Digimatic USB) cable, 2m, Round 6-Pin Type

Consumable spares

No.	Description
938882	Battery SR44 1.5V

Measuring force adjustable

Series 227

ABSOLUTE®

This micrometer has an adjustable measuring force to suit various kinds of workpieces.
The ABSOLUTE Digimatic Micrometer QuickMike offers the following benefits:

- It's dedicated to applications requiring a constant/low measuring force such as measuring wire, paper and plastic/rubber parts.
- Constant and low measuring force mechanism in the thimble.
- Non-rotating spindle.
- Speedy spindle feed of 10mm/rev.

227-201

Metric

No.	Range [mm]	Accuracy [µm]	Measuring force accuracy (1) [N]	Measuring force settings(1) [N]	Mass [g]
227-201	0-15	±2	±0,1 + (force setting/10)	0,5; 1; 1,5; 2; 2,5	300
227-203	15-30	±2	±0,1 + (force setting/10)	0,5; 1; 1,5; 2; 2,5	380
227-205	0-10	±2	±0,4 + (force setting/10)	2; 4; 6; 8; 10	340
227-206	10-20	±2	±0,4 + (force setting/10)	2; 4; 6; 8; 10	425
227-207	20-30	±2	±0,4 + (force setting/10)	2; 4; 6; 8; 10	415

(1) Only valid for instrument orientation within ±3 degrees of horizontal when measuring.

Also available! Inch/Metric Models

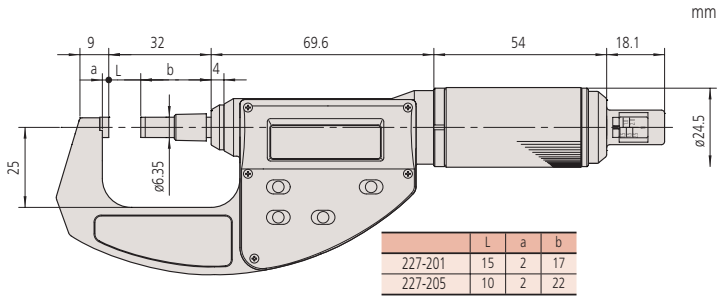

	L	a	b
227-201	15	2	17
227-205	10	2	22

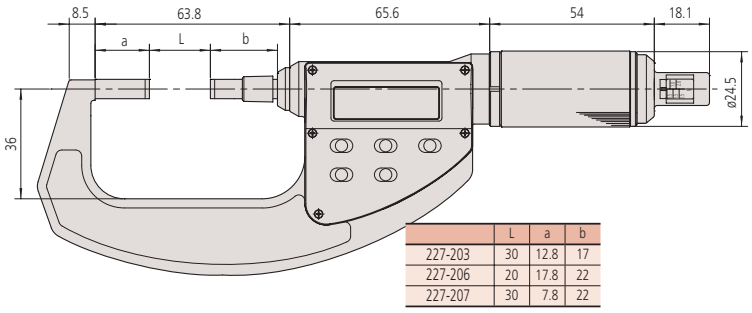

	L	a	b
227-203	30	12.8	17
227-206	20	17.8	22
227-207	30	7.8	22

All products to be sold to commercial customers. Product illustrations are without obligation. Product descriptions, in particular any and all technical specifications, are only binding when explicitly agreed upon. For suggested retail prices, please refer to the separate price list.

Mitutoyo

Ratchet Thimble Micrometer

Series 102

This Ratchet Thimble Micrometer has a new mechanism that ensures consistent and reliable measurements, even for users inexperienced in operating a micrometer with one hand.
The Ratchet Thimble Micrometer offers you the following benefits:

- It works both from the thimble and the speeder, enabling easy, one-handed operation.
- The ratchet's clearly audible operation provides reassurance that measurements are being taken at a constant, preset measuring force.

102-701

102-702

Metric

No.	Range [mm]	Graduation	Accuracy [µm]	Mass [g]
102-701	0-25	0,01 mm	±2	180
102-707	0-25	0,001 mm	±2	180
102-702	25-50	0,01 mm	±2	270
102-708	25-50	0,001 mm	±2	270

Also available! Inch Models

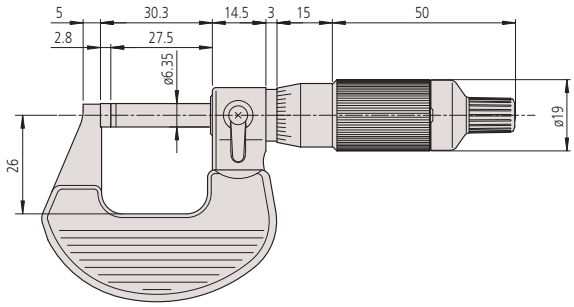

0-25 mm

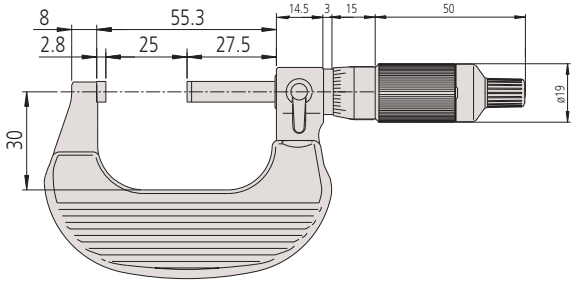

25-50 mm

Coloured ratchet caps (optional accessories)

Specifications

Accuracy	Refer to the list of specifications
Scale	Thimble and sleeve satin chrome finish ø19 mm
Measuring force	5-10 N
Flatness	0,6 µm
Measuring surfaces	Carbide tipped, micro-lap finish
Measuring spindle	With spindle lock, ø 6,35 mm, spindle pitch 0,5 mm
Parallelism	2 µm
Delivered	Including box, key, setting standard (from 25 mm upward), certificate of inspection

Optional accessories

No.	Description
04GAA899	Color speeder, for Ratched Thimble Black
04GAA900	Color speeder, for Ratched Thimble Red
04GAA901	Color speeder, for Ratched Thimble Yellow
04GAA902	Color speeder, for Ratched Thimble Green
04GAA903	Color speeder, for Ratched Thimble Blue

Consumable spares

No.	Description
04AAB208	Color speeder, for Ratched Thimble Grey

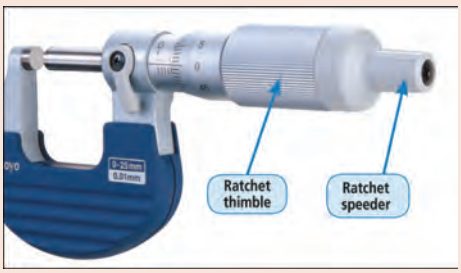

All products to be sold to commercial customers. Product illustrations are without obligation. Product descriptions, in particular any and all technical specifications, are only binding when explicitly agreed upon. For suggested retail prices, please refer to the separate price list.

Outside Micrometer

Specifications

Accuracy	Refer to the list of specifications
Scale	Thimble and sleeve satin chrome finish ø18 mm
Measuring force	5-10 N
Graduation	0,01 mm
Flatness	0,6 µm
Measuring surfaces	Carbide tipped, micro-lap finish
Measuring spindle	With spindle lock, ø6,35 mm, spindle pitch 0,5 mm
Parallelism	2 µm for 0 to 75 mm model 3 µm for models 75-100 mm
Delivered	Including box, key setting standard (from 25 mm upward), certificate of inspection (0-50 mm range)

Series 102

This Outside Micrometer is a new generation, accurate and reliable device that offers you the following benefits:

- Its heat-insulated frame is tapered (on the anvil side), allowing you to access hard-to-reach places.
- A ratchet stop delivers a constant measuring force.

Only for 0-25, 25-50 mm

102-301

Metric

No.	Range [mm]	Accuracy [µm]	L [mm]	a [mm]	b [mm]	c [mm]	d [mm]
102-301	0-25	±2	30,3	2,8	5	26	6,35
102-302	25-50	±2	55,3	2,8	8	32	6,35
102-303	50-75	±2	80,3	2,8	9	45	6,35
102-304	75-100	±3	105,3	2,8	10	58	6,35

Metric

Micrometer set

No.	Range [mm]	Content of Set	Mass [g]
102-911-40	0-100	102-301, 102-302, 102-303, 102-304, 3 setting standards	1200

102-911-40

mm

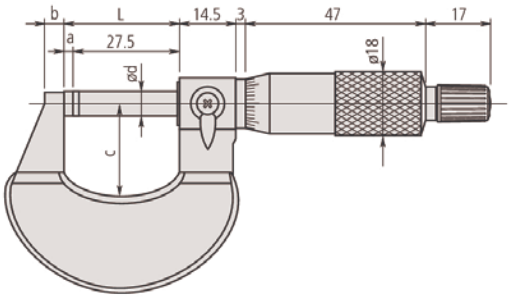

All products to be sold to commercial customers. Product illustrations are without obligation. Product descriptions, in particular any and all technical specifications, are only binding when explicitly agreed upon. For suggested retail prices, please refer to the separate price list.

Outside Micrometer

Series 103

This Outside Micrometer is a new generation, accurate and reliable device that offers you the following benefits:
– Lightweight workshop design.

103-137

Only for 0-25 and 25-50 mm

Metric — Graduation 0,001 mm

No.	Range [mm]	Accuracy [µm]	L [mm]	a [mm]	b [mm]	c [mm]	d [mm]	Mass [g]
103-129	0-25	±2	30,3	2,8	9	28	6,35	175
103-130	25-50	±2	55,3	2,8	10	38	6,35	215

Metric — Graduation 0,01 mm

No.	Range [mm]	Accuracy [µm]	L [mm]	a [mm]	b [mm]	c [mm]	d [mm]	Mass [g]
103-137	0-25	±2	30,3	2,8	9	28	6,35	175
103-138	25-50	±2	55,3	2,8	10	38	6,35	215
103-139-10	50-75	±2	80,3	2,8	12	46	6,35	315
103-140-10	75-100	±3	105,3	2,8	14	57	6,35	375
103-141-10	100-125	±3	132,8	5,3	17	76	6,35	515
103-142-10	125-150	±3	158,2	5,7	19	90	6,35	665
103-143-10	150-175	±4	183,6	6,1	20	102	6,35	720
103-144-10	175-200	±4	208,8	6,3	19	115	6,35	920
103-145-10	200-225	±4	234,2	6,7	18	127	6,35	1080
103-146-10	225-250	±5	258	5,5	18	139	6,35	1255
103-147-10	250-275	±5	284	6,5	18	152	6,35	1405
103-148-10	275-300	±5	309	6,5	18	166	6,35	1565
103-149	300-325	±6	353	18	28	187	8	1985
103-150	325-350	±6	378	18	28	199	8	2155
103-151	350-375	±6	403	18	28	212	8	2305
103-152	375-400	±7	428	18	28	224	8	2455
103-153	400-425	±7	453	18	28	236	8	2715
103-154	425-450	±7	478	18	28	248	8	2965
103-155	450-475	±8	503	18	28	261	8	3215
103-156	475-500	±8	528	18	28	273	8	3450
103-157	500-525	±9	575	40	28	307	8	4060
103-158	525-550	±9	575	15	28	307	8	4080
103-159	550-575	±9	625	40	28	332	8	4500
103-160	575-600	±9	625	15	28	332	8	4525
103-161	600-625	±9	675	40	28	355	8	4915
103-162	625-650	±9	675	15	28	355	8	4930
103-163	650-675	±9	725	40	28	382	8	5200
103-164	675-700	±9	725	15	28	382	8	5215
103-165	700-725	±9	775	40	28	405	8	5835
103-166	725-750	±9	775	15	28	405	8	5860
103-167	750-775	±9	825	40	28	430	8	6385
103-168	775-800	±9	825	15	28	430	8	6410
103-169	800-825	±9	875	40	28	455	8	6925
103-170	825-850	±9	875	15	28	455	8	6940
103-171	850-875	±9	925	40	28	480	8	7565
103-172	875-900	±9	925	15	28	480	8	7590
103-173	900-925	±9	975	40	28	505	8	8215
103-174	925-950	±9	975	15	28	505	8	8240
103-175	950-975	±9	1025	40	28	530	8	8860
103-176	975-1000	±9	1025	15	28	530	8	8880

Specifications

Accuracy	Refer to the list of specifications
Scale	Thimble and sleeve satin chrome finish
Graduation	0,01 mm / 0,001 mm
Flatness	0,6 µm for models up to 300 mm 1 µm for models over 300 mm
Measuring surfaces	Carbide tipped, micro-lap finish
Measuring spindle	with spindle lock, spindle pitch 0,5 mm
Parallelism	(2+L/100) µm, L = max. range (mm)
Measuring force	5-10 N (from 100 mm upward : 5-15 N)
Delivered	Including box, setting standard (from 25 mm upward), key, certificate of inspection (0-50 mm range)

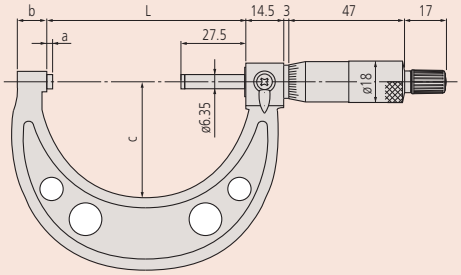

Models up to 50 mm

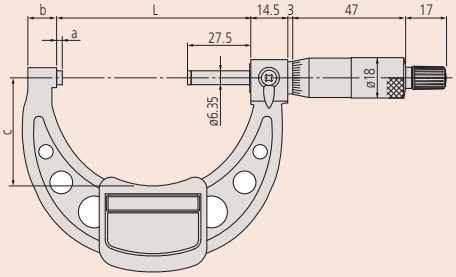

Models 50 mm to 300 mm with insulating plate

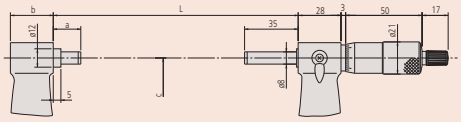

Models over 300 mm

All products to be sold to commercial customers. Product illustrations are without obligation. Product descriptions, in particular any and all technical specifications, are only binding when explicitly agreed upon. For suggested retail prices, please refer to the separate price list.

Outside Micrometers in Set

Specifications

Graduation	0,01 mm

Series 103

This Outside Micrometer is a new generation, accurate and reliable device that offers you the following benefits:
- Lightweight workshop design.
- Supplied as a boxed set for your convenience.

103-913-50

Metric

Micrometer set

No.	Range [mm]	Content of Set	Mass [g]
103-927-10	0-75	103-137, 103-138, 103-139-10, 2 setting standards	750
103-913-50	0-150	103-137, 103-138, 103-139-10, 103-140-10, 103-141-10, 103-142-10, 5 setting standards	2260
103-915-10	150-300	103-143-10, 103-144-10, 103-145-10, 103-146-10, 103-147-10, 103-148-10, 6 setting standards	7695
103-914-50	0-300	All micrometers of 103-913-50 and 103-915-10 in one set, 11 setting standards	9300

All products to be sold to commercial customers. Product illustrations are without obligation. Product descriptions, in particular any and all technical specifications, are only binding when explicitly agreed upon. For suggested retail prices, please refer to the separate price list.

Mitutoyo

Digit Outside Micrometer

Series 193

This Digit Outside Micrometer comes with a mechanical counter, and offers you the following benefits:
- Direct-reading outside the micrometer for quick and easy reading.
- Quick and error-free reading.

193-101

Metric

1. With ratchet stop (reading 0,01 mm)

No.	Range [mm]	Accuracy [µm]	L [mm]	a [mm]	b [mm]	c [mm]	Mass [g]
193-101	0-25	±2	30	2,5	5	26	224
193-102	25-50	±2	55	2	8	32	275
193-103	50-75	±2	80	2	9	45	379
193-104	75-100	±3	105	2	9	57	489

Metric

2. With ratchet stop (reading 0,001 mm is obtained with vernier)

No.	Range [mm]	Accuracy [µm]	L [mm]	a [mm]	b [mm]	c [mm]	Mass [g]
193-111	0-25	±2	30	2,5	5	26	224
193-112	25-50	±2	55	2	8	32	275
193-113	50-75	±2	80	2	9	45	379
193-114	75-100	±3	105	2	9	57	489

Metric

3. Micrometer set

No.	Range [mm]	Content of Set	Mass [g]
193-901	0-75	193-101, 193-102, 193-103, 2 setting standards	820
193-902	0-100	193-101, 193-102, 193-103, 193-104, 3 setting standards	1367

Also available! Inch Models

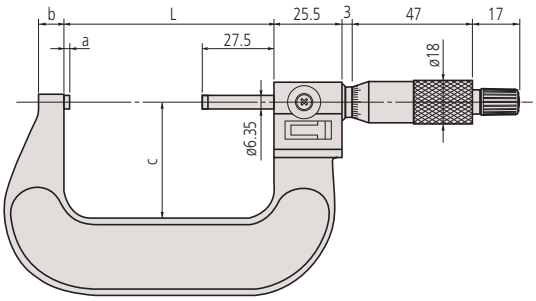

Specifications

Accuracy	Refer to the list of specifications
Measuring force	5-15 N
Graduation	0,001 mm; 0,01 mm
Counter reading	0,01 mm
Scale	Thimble and sleeve satin chrome finish
Flatness	0,6 µm
Parallelism	(2+L/100) µm, L = max. range (mm)
Measuring surfaces	Carbide tipped, micro-lap finish
Measuring spindle	With spindle lock, ø 6,35 mm, spindle pitch 0,5 mm
Delivered	Including box, setting standard (from 25 mm upward), key

193-902

All products to be sold to commercial customers. Product illustrations are without obligation. Product descriptions, in particular any and all technical specifications, are only binding when explicitly agreed upon. For suggested retail prices, please refer to the separate price list.

Digimatic Micrometer with Interchangeable Anvils

Series 340

This Digimatic Micrometer offers you an extra wide measuring range, and has the following benefits:
- Easy, interchangeable anvils allow a wide range of measurements.
- Ratchet stop for constant force.

Dust- and Waterproof IP65

IP65

up 300 mm

Functions	Series 340: 340-251-30 340-252-30	Series 340: 340-520 up to 340-526
ZERO/ABS	●	●
ON		●
Auto Power OFF after 20 min. non use	●	●
2 x PRESET	●	●
Low voltage alarm	●	●
Function lock	●	●
Data output	●	●
HOLD	●	●

Specifications

Accuracy	±(4+L/75) µm, L = max. range (mm) (excluding quantizing error)
Digital step	0,001 mm; 0,001 mm; 0,001 mm (340-351-10)
Scale	Thimble and sleeve satin chrome finish ø18 mm, ø21 mm (over 300 mm)
Flatness	0,6 µm, 1 µm (over 300 mm)
Parallelism	2 µm for models up to 75 mm 3 µm for models up to 150 mm (2+L/100) µm for models over 150 mm, L = max. range (mm)
Measuring surfaces	Hardened, lapped (anvil), carbide tipped, lapped (spindle side)
Measuring spindle	With spindle lock, ø6,35 mm, ø8 mm (over 300 mm), spindle pitch 0,5 mm
Battery life	approx. 2,4 years, approx. 1,8 years (over 300 mm)
Measuring force	5-10 N, 10-14 N (over 300 mm)
Delivered	Including box, setting standard, anvils, key, 1 battery (2 batteries over 300 mm)

Optional accessories

No.	Description
05CZA662	Digimatic Cable with Data Button IP Type, 1m, Micrometer Type
05CZA663	Digimatic Cable with Data Button IP Type, 2m, Micrometer Type
02AZD790B	U-WAVE T Connection Cable B, with Data Button IP Micrometer Type
06ADV380B	USB Input Tool Direct (Digimatic USB), with Data Button IP Micrometer Type
04AZB512	Digimatic Cable, Straight, Data Button, 1m
04AZB513	Digimatic Cable, Straight, Data Button, 2m
959149	Digimatic Cable, Straight, Data Button, 1m
959150	Digimatic Cable, Straight, Data Button, 2m

05CZA662/05CZA663/02AZD790B/06ADV380B for models up to 300 mm
04AZB512/04AZB513/959149/959150/02AZD790C/06ADV380C for models over 300 mm

Consumable spares

No.	Description
938882	Battery SR44 1.5V

340-251-30

Metric

No.	Range [mm]	Interchangeable anvils	Protection IP65	Setting standard	Mass [kg]
340-251-30	0-150	6	●	5	0,96
340-252-30	150-300	6	●	6	1,88
340-520	300-400	4		4	2,6
340-521	400-500	4		4	4,1
340-522	500-600	4		4	5,5
340-523	600-700	4		4	6,8
340-524	700-800	4		4	8,2
340-525	800-900	4		4	9,5
340-526	900-1000	4		4	10,9

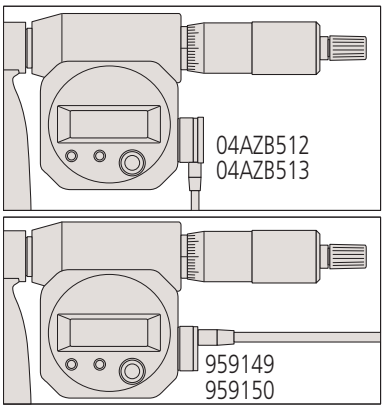

Models over 300 mm

All products to be sold to commercial customers. Product illustrations are without obligation. Product descriptions, in particular any and all technical specifications, are only binding when explicitly agreed upon. For suggested retail prices, please refer to the separate price list.

Mitutoyo

Outside Micrometer with Interchangeable Anvils

Series 104

This Outside Micrometer offers you an extra wide measuring range, and has the following benefits:
- Easy, interchangeable anvils allow a wide range of measurements.
- Ratchet stop for consistent measurements.

104-171

104-135A

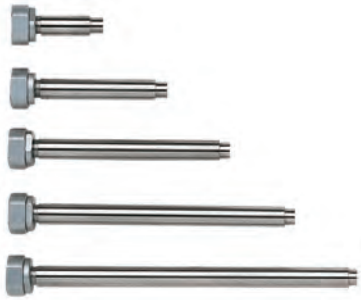

Specifications

Accuracy	±(4+L/75) µm, L = max. range (mm)
Graduation	0,01 mm
Scale	Thimble and sleeve satin chrome finish ø18 mm (up to 300 mm) ø21 mm (over 300 mm)
Flatness	0,6 µm for models up to 300 mm 1 µm for models over 300 mm
Parallelism	2 µm for models up to 75 mm 3 µm for models up to 150 mm (2+L/100) µm for models over 150 mm L = max. range (mm)
Measuring surfaces	Hardened, lapped (anvil), carbide tipped, lapped (spindle side)
Measuring spindle	With spindle lock, ø 6,35 mm (up to 300 mm) ø8 mm (over 300 mm), spindle pitch 0,5 mm
Measuring force	5-10 N, 10-14 N (over 300 mm)
Delivered	Including box, setting standard, anvils, key

Metric

No.	Range [mm]	Interchangeable anvils	Setting standard	Mass [kg]
104-171	0-50	1	1	0,32
104-139A	0-100	4	3	0,79
104-135A	0-150	6	5	1,35
104-161A	50-150	4	4	1,35
104-140A	100-200	4	4	1,38
104-136A	150-300	6	6	2,65
104-141A	200-300	4	4	2,22
104-142A	300-400	4	4	3,31
104-143A	400-500	4	4	4,81
104-144A	500-600	4	4	6,35
104-145A	600-700	4	4	7,72
104-146A	700-800	4	4	9,08
104-147A	800-900	4	4	10,41
104-148A	900-1000	4	4	11,78

Also available! Inch Models

All products to be sold to commercial customers. Product illustrations are without obligation. Product descriptions, in particular any and all technical specifications, are only binding when explicitly agreed upon. For suggested retail prices, please refer to the separate price list.

Outside Micrometer with Interchangeable Anvils

Series 104/340

These are optional interchangeable anvils you can use with the 104 and 340 series.

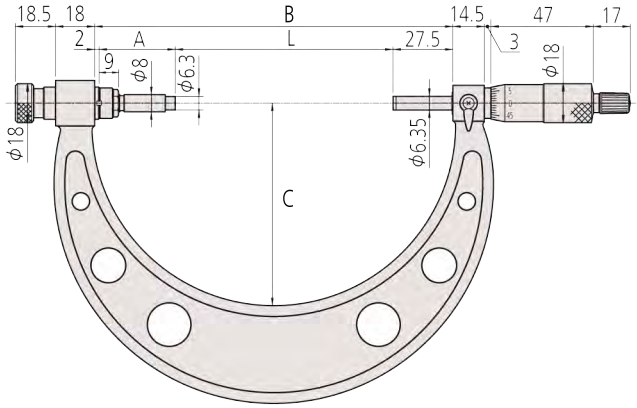

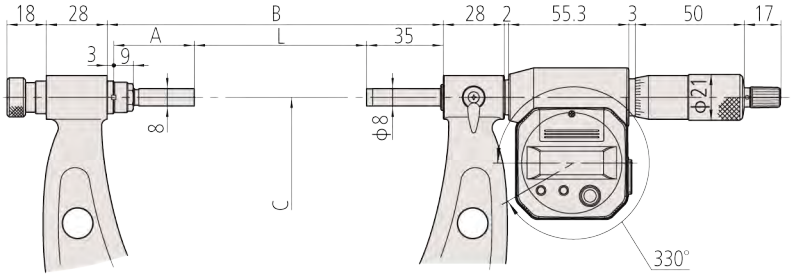

Note: The values for B mm and C mm are valid for all products shown in the tables below:

B mm:
Value for measuring range:
0/150 mm: 164,5; 150/300 mm: 314,5; 300/400 mm: 425; 400/500 mm: 525; 500/600 mm: 625; 600/700 mm: 725; 700/800 mm: 825; 800/900 mm: 925; 900/1000 mm: 1025

C mm:
Value for measuring range:
0/150 mm: 93; 150/300 mm: 166; 300/400 mm: 224; 400/500 mm: 273; 500/600 mm: 332; 600/700 mm: 382; 700/800 mm: 430; 800/900 mm: 480; 900/1000 mm: 530

0 - 300 mm

Interchangeable anvil ident	M1 mm	M2 mm	M3 mm	M4 mm	M5 mm	M6 mm
No.	**303950**	**303951**	**303952**	**303953**	**303954**	**303955**
L=0/150 mm	0-25	25-50	50-75	75-100	100-125	125-150
L=150/300 mm	150-175	175-200	200-225	225-250	250-275	275-300
A mm	135	110	85	60	35	10

300 - 1000 mm

Interchangeable anvil ident	M3 mm	M4 mm	M5 mm	M6 mm
No.	**304001**	**304002**	**304003**	**304004**
L=300/400 mm	300-325	325-350	350-375	375-400
L=400/500 mm	400-425	425-450	450-475	475-500
L=500/600 mm	500-525	525-550	550-575	575-600
L=600/700 mm	600-625	625-650	650-675	675-700
L=700/800 mm	700-725	725-750	750-775	775-800
L=800/900 mm	800-825	825-850	850-875	875-900
L=900/1000 mm	900-925	925-950	950-975	975-1000
A mm	87	62	37	12

All products to be sold to commercial customers. Product illustrations are without obligation. Product descriptions, in particular any and all technical specifications, are only binding when explicitly agreed upon. For suggested retail prices, please refer to the separate price list.

Mitutoyo

Outside Micrometer with Anvil Extension Collars

Series 105

This Outside Micrometer comes with Extension Anvil Collars.
It offers you the following benefits:

- The collars have a stable and rugged yet lightweight tube construction, and are ideal for large micrometers.
- The 50mm spindle stroke gives you extended range compared to standard spindle types.
- Anvil collars extend the measuring range even further.
- The setting standards supplied cover the whole measuring range.

105-105

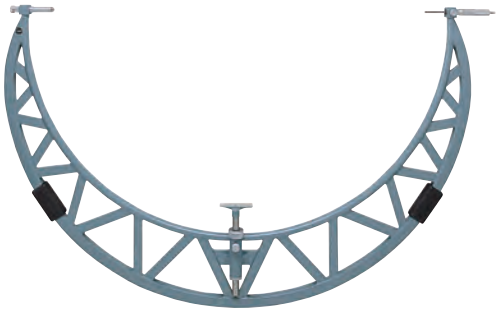

105-408

Metric — Extension Collar: 50 mm

No.	Range [mm]	Extension collar [mm]	Mass [kg]
105-103	500-600	50	5,53
105-104	600-700	50	6,35
105-105	700-800	50	7,17
105-106	800-900	50	7,99
105-107	900-1000	50	8,81
105-408	1000-1100	50	10,49
105-409	1100-1200	50	11,28
105-410	1200-1300	50	12,05
105-411	1300-1400	50	12,72
105-412	1400-1500	50	13,4
105-413	1500-1600	50	14,33
105-414	1600-1700	50	15,26
105-415	1700-1800	50	16,44
105-416	1800-1900	50	18,1
105-417	1900-2000	50	19,76

Metric — Extension Collar: 50 mm, 100 mm

No.	Range [mm]	Extension collar [mm]	Mass [kg]
105-418	1000-1200	50, 100	13,77
105-419	1200-1400	50, 100	15,77
105-420	1400-1600	50, 100	17,91
105-421	1600-1800	50, 100	20,8
105-422	1800-2000	50, 100	22,76

Also available! Inch Models

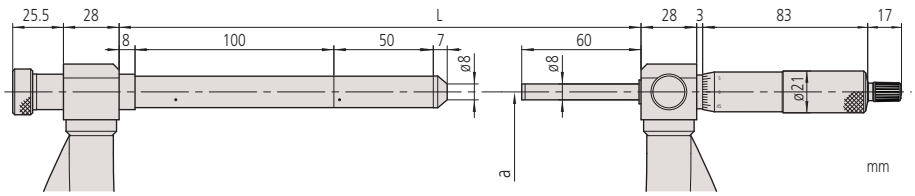

Specifications

Accuracy	±(6+L/75) µm, L = max. range (mm)
Scale	Thimble and sleeve satin chrome finish, ø21 mm
Measuring force	5-10 N
Graduation	0,01 mm
Flatness	1,3 µm
Parallelism	(2+L/100) µm (mm), L = max. range (mm)
Measuring surfaces	Carbide tipped, micro-lap finish
Measuring spindle	With spindle lock, ø8 mm spindle pitch 0,5 mm
Delivered	Including box, setting standards (2 pieces), adjustable stop (for models over 1000 mm range)

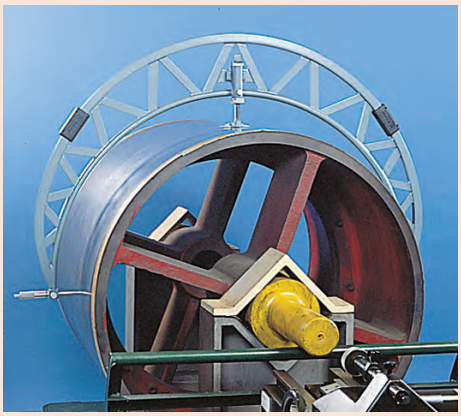

Application with adjustable stop on workpiece

Anvil extension collar

Range	L	a (distance to workpiece stopper)
1000 - 1200 mm	1225	500 - 600
1200 - 1400 mm	1425	600 - 700
1400 - 1600 mm	1625	700 - 800
1600 - 1800 mm	1825	800 - 900
1800 - 2000 mm	2025	900 - 1000

All products to be sold to commercial customers. Product illustrations are without obligation. Product descriptions, in particular any and all technical specifications, are only binding when explicitly agreed upon. For suggested retail prices, please refer to the separate price list.

Digimatic Sheet Metal Micrometer

Series 389

This Digimatic Sheet Metal Micrometer is designed with a deep frame, for measuring the thickness of sheet material.

Functions	Series 389
ORIGIN	●
ZERO/ABS	●
Auto Power OFF after 20 min. non use	●
2 x PRESET	●
Low voltage alarm	●
Function lock	●
Data output	●
HOLD	●

Specifications

Accuracy	Refer to the list of specifications (excluding quantizing error)
Digital step	0,001 mm
Measuring force	3-8, 10-14 (389-514) N
Scale	Thimble and sleeve satin chrome finish, ø 18 mm/ ø 21 mm
Flatness	0,6 µm for models with 160/165 mm throat 1 µm for models with 330 mm throat
Parallelism	3 µm
Measuring surfaces	Carbide tipped, micro-lap finish
Measuring spindle	With spindle lock, ø 6,35 mm/ø 8 mm (389-514), spindle pitch 0,5 mm
Battery life	approx. 2,4 years, approx. 1,8 years (389-514)
Delivered	Including box, key, 1 battery/ 2 batteries (389-514)

Optional accessories

No.	Description
05CZA662	Digimatic Cable with Data Button IP Type, 1m, Micrometer Type
05CZA663	Digimatic Cable with Data Button IP Type, 2m, Micrometer Type
02AZD790B	U-WAVE T Connection Cable B, with Data Button IP Micrometer Type
06ADV380B	USB Input Tool Direct (Digimatic USB), with Data Button IP Micrometer Type
04AZB512	Digimatic Cable, Straight, Data Button, 1m
04AZB513	Digimatic Cable, Straight, Data Button, 2m
959149	Digimatic Cable, Straight, Data Button, 1m
959150	Digimatic Cable, Straight, Data Button, 2m
02AZD790C	U-WAVE T Connection Cable C, Straight, with Data Button
06ADV380C	USB Input Tool Direct (Digimatic USB), Straight, with Data Button

04AZB512/04AZB513/959149/959150/02AZD790C/06ADV380C for 389-514

Consumable spares

No.	Description
938882	Battery SR44 1.5V

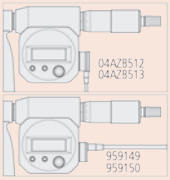

Digimatic cable for 389-514

389-251-30

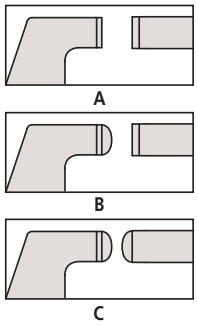

Metric

No.	Range [mm]	Anvil/ Tip	Accuracy [µm]	IP65	Mass [g]
389-251-30	0-25	A	±4	●	840
389-261-30	0-25	B	±4	●	840
389-271-30	0-25	C	±4	●	840
389-514	0-25	A	±5		2750
389-252-30	25-50	A	±4	●	920
389-262-30	25-50	B	±4	●	920
389-272-30	25-50	C	±4	●	920

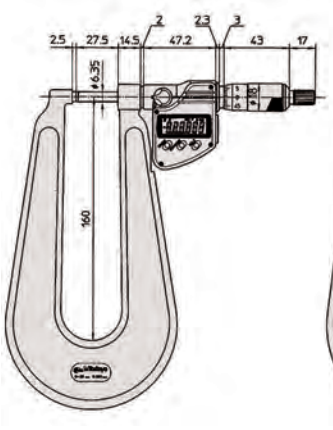

0-25 mm

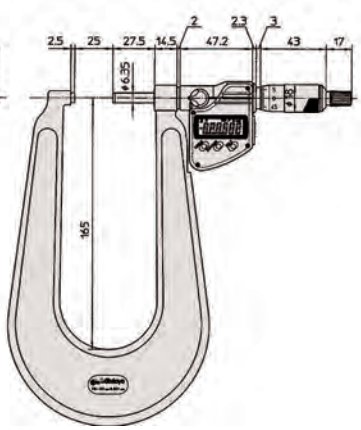

25-50 mm

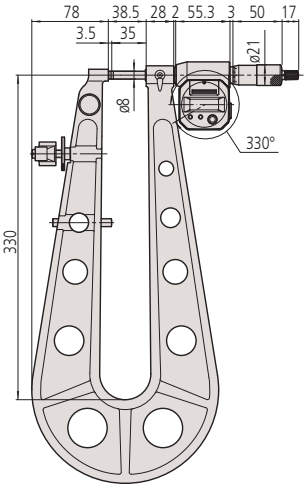

389-514

All products to be sold to commercial customers. Product illustrations are without obligation. Product descriptions, in particular any and all technical specifications, are only binding when explicitly agreed upon. For suggested retail prices, please refer to the separate price list.

Sheet Metal Micrometer

Series 118

This Sheet Metal Micrometer is designed with a deep frame for measuring the thickness of sheet material.

118-102

Metric

No.	Range [mm]	Anvil/ Tip	Accuracy [µm]	L [mm]	a [mm]	b [mm]	c [mm]	d [mm]	e [mm]	f [mm]	g [mm]	Mass [g]
118-101	0-25	A	±4	30,3	110	27,5	2,8	18	6,35	14,5	39	445
118-102	0-25	A	±4	30,3	160	27,5	2,8	18	6,35	14,5	48	740
118-103	0-25	A	±5	38,5	330	35	3,5	21	8	28	84	2650
118-110	25-50	A	±4	55,3	165	27,5	2,5	18	6,35	14,5	45	820
118-114	0-25	B	±4	30,3	160	27,5	2,8	18	6,35	14,5	48	740
118-118	0-25	C	±4	30,3	160	27,5	2,8	18	6,35	14,5	48	740
118-126	25-50	C	±4	55,3	165	27,5	2,5	18	6,35	14,5	48	820

Also available! Inch Models

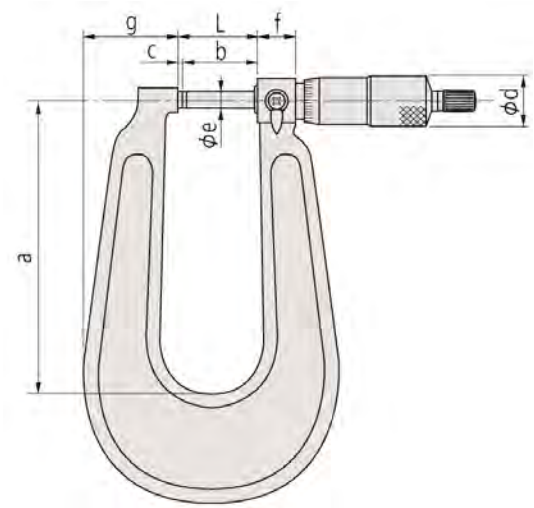

Specifications

Accuracy	Refer to the list of specifications
Measuring force	3-8 N
Graduation	0,01mm
Scale	Thimble and sleeve satin chrome finish, ø18 mm or ø21 mm
Flatness	0,6 µm for models with 110, 160, 165 mm throat 1 µm for models with 300 mm throat
Parallelism	3 µm
Measuring surfaces	Carbide-tipped, micro-lap finish
Measuring spindle	With spindle lock, throat depth up to 150 mm : ø 6,35 mm throat depth up to 300 mm : ø 8 mm, spindle pitch 0,5 mm
Delivered	Including box, key, setting standard (from 25 mm upward)

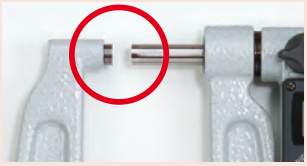

Type A
Flat-Flat

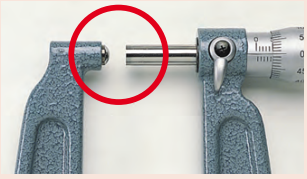

Type B
Spherical-Flat

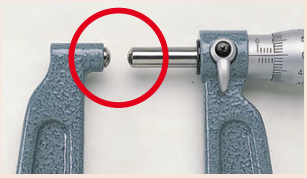

Type C
Spherical-Spherical

All products to be sold to commercial customers. Product illustrations are without obligation. Product descriptions, in particular any and all technical specifications, are only binding when explicitly agreed upon. For suggested retail prices, please refer to the separate price list.

Sheet Metal Micrometer Graduated Dial

Specifications

Accuracy	Refer to the list of specifications
Graduation	0,01 mm
Scale	Thimble and sleeve satin chrome finish
Measuring surfaces	Convex anvil and flat spindle
Measuring spindle	With spindle lock, Ø 6,35 mm

The Series 119 is provided with a dial for making easy and quick reading.

Series 119

This Sheet Metal Micrometer comes with a graduated dial.
It offers you the following features:
- A deep frame that enables you to measure the thickness of sheet material.
- Easy-to-read graduated dial.

119-202

Metric — Dial reading model

No.	Range [mm]	Accuracy [µm]	Throat [mm]	Mass [g]
119-202	0-25	±4	50	305

mm

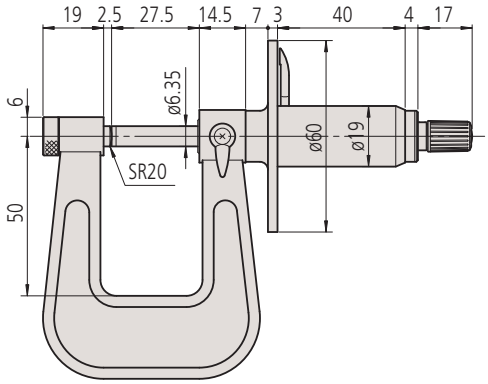

All products to be sold to commercial customers. Product illustrations are without obligation. Product descriptions, in particular any and all technical specifications, are only binding when explicitly agreed upon. For suggested retail prices, please refer to the separate price list.

Digimatic Caliper Jaw Micrometer

Series 343

This Digimatic Caliper Jaw Micrometer has been specially designed for measuring in hard-to-reach places.

343-250-30

Metric

No.	Range [mm]	Accuracy [µm]	L [mm]	a [mm]	b [mm]	c [mm]	Mass [g]
343-250-30	0-25	±5	55,5	27,5	10,6	32,9	320
343-251-30	25-50	±6	80,5	27,5	10,6	32,9	340
343-252-30	50-75	±7	105,5	27,5	10,6	32,9	390
343-253-30	75-100	±8	130,5	27,5	10,6	32,9	440

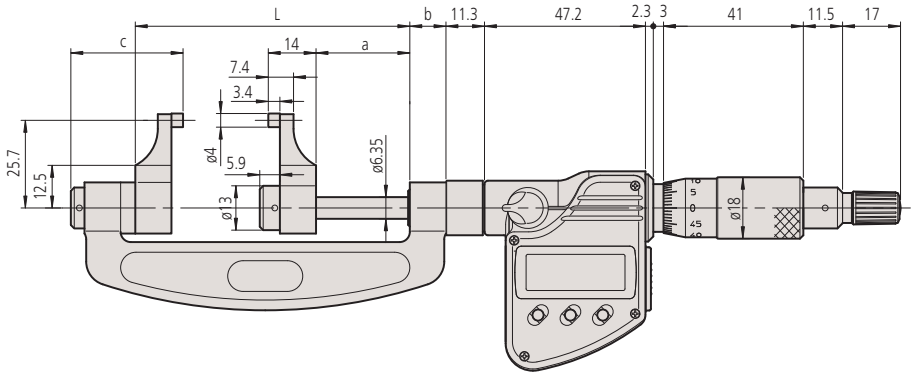

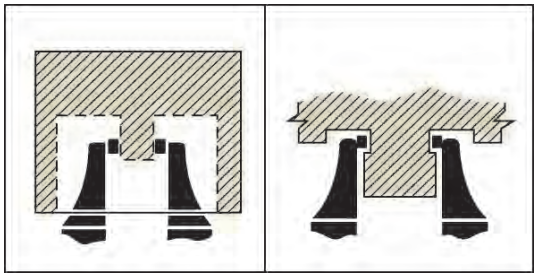

Functions	Series 343
ORIGIN	●
ZERO/ABS	●
Auto Power OFF after 20 min. non use	●
Low voltage alarm	●
Function lock	●
Data output	●
HOLD	●

Specifications

Accuracy	Refer to the list of specifications (excluding quantizing error)
Measuring force	1-6 N
Digital step	0,001 mm
Scale	Thimble and sleeve satin chrome finish, ø18 mm
Flatness	0,3 µm
Parallelism	(3+L/75) µm, L = max. range (mm)
Measuring surfaces	Carbide tipped, micro-lap finish
Measuring spindle	With spindle lock, ø 6,35 mm, spindle pitch 0,5 mm
Battery life	approx. 2,4 years
Delivered	Including box, setting standard (from 25 mm upward), key, 1 battery

Optional accessories

No.	Description
05CZA662	Digimatic Cable with Data Button IP Type, 1m, Micrometer Type
05CZA663	Digimatic Cable with Data Button IP Type, 2m, Micrometer Type
02AZD790B	U-WAVE T Connection Cable B, with Data Button IP Micrometer Type
06ADV380B	USB Input Tool Direct (Digimatic USB), with Data Button IP Micrometer Type

Consumable spares

No.	Description
938882	Battery SR44 1.5V

All products to be sold to commercial customers. Product illustrations are without obligation. Product descriptions, in particular any and all technical specifications, are only binding when explicitly agreed upon. For suggested retail prices, please refer to the separate price list.

Caliper Jaw Micrometer

Series 143

This Caliper Jaw Micrometer has been specially designed for measuring in hard-to-reach places.

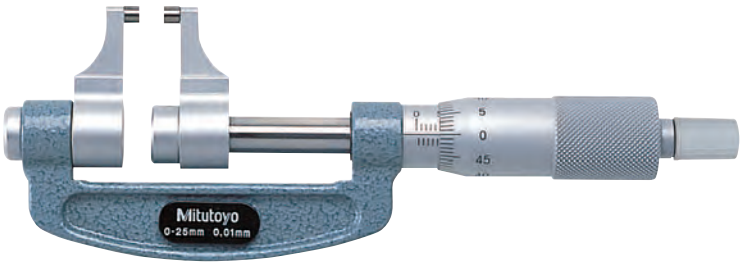

143-101

Specifications

Accuracy	Refer to the list of specifications
Measuring force	1-6 N
Graduation	0,01mm
Scale	Thimble and sleeve satin chrome finish, ø18 mm
Flatness	0,3 µm
Parallelism	(3+L/75) µm (mm), L = max. range (mm)
Measuring surfaces	Carbide tipped, micro-lap finish
Measuring spindle	ø 6,35 mm, spindle pitch 0,5 mm
Delivered	Including box, setting standard (from 25 mm upward), key

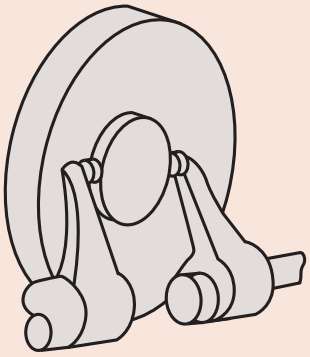

Metric

No.	Range [mm]	Accuracy [µm]	L [mm]	a [mm]	b [mm]	c [mm]	Mass [g]
143-101	0-25	±5	59,8	31,8	10,6	28,6	210
143-102	25-50	±6	84,8	31,8	10,6	28,6	230
143-103	50-75	±7	109,8	31,8	10,6	28,6	280
143-104	75-100	±8	134,8	31,8	10,6	28,6	330
143-105	100-125	±9	159,8	31,8	10,6	28,6	400
143-106	125-150	±9	184,8	31,8	10,6	28,6	450
143-107	150-175	±10	209,8	31,8	10,6	28,6	520
143-108	175-200	±10	234,8	31,8	10,6	28,6	600
143-109	200-225	±11	255,8	27,8	14,5	32,5	690
143-110	225-250	±11	280,8	27,8	14,5	32,5	790
143-111	250-275	±12	305,8	27,8	14,5	32,5	900
143-112	275-300	±12	330,8	27,8	14,5	32,5	920

Also available! Inch Models

mm

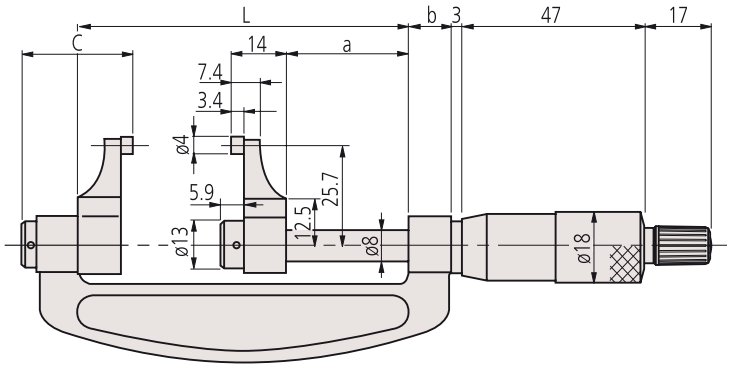

All products to be sold to commercial customers. Product illustrations are without obligation. Product descriptions, in particular any and all technical specifications, are only binding when explicitly agreed upon. For suggested retail prices, please refer to the separate price list.

Universal Micrometer

Series 116

This Universal Micrometer comes with interchangeable tips. It offers you the following benefits:
- Its non-rotating spindle accepts seven forms of optional interchangeable anvil/spindle tip (including flat, spline, spherical, point, knife-edge, disc, and blade) allowing you to use it in a wide range of applications.
- Optional anvils/spindle-tips for screw thread measurement (matching V and cone) are also available.

116-101

Metric

No.	Range [mm]	Accuracy [µm]	Mass [g]
116-101	0-25	±4	250
116-102	25-50	±4	300

Also available! Inch Models

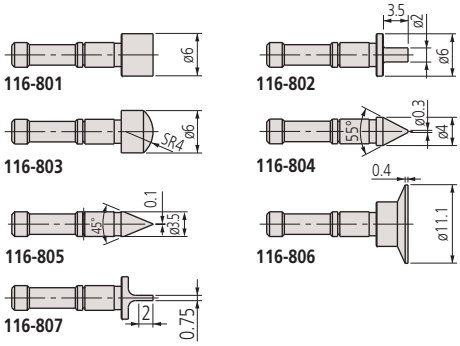

Specifications

Accuracy	Refer to the list of specifications
Measuring force	5-10 N
Graduation	0,01mm
Scale	Thimble and sleeve satin chrome finish, ø18 mm
Measuring spindle	Ø 8 mm, spindle pitch 0,5 mm
Delivered	Including box, plain and 60° thread setting standard (from 25 mm upward), key Interchangeable anvils/spindle-tips not included

Optional accessories

No.	Description
116-801	Measuring Tip, Flat
116-802	Measuring Tip, Spline
116-803	Measuring Tip, Spherical
116-804	Measuring Tip Point
116-805	Measuring Tip, Knife-edge
116-806	Measuring Tip, Disk
116-807	Measuring Tip Blade
116-800	Measuring Tip Set, 7 Pairs
116-830	Measuring Tip Thread Measurement Set, 6 Pairs

116-830 :
- 0,4-0,5 mm/64-48TPI (**116-831**)
- 0,6-0,9 mm/44-28TPI (**116-832**)
- 1-1,75 mm/24-14TPI (**116-833**)
- 2-3 mm/13-9TPI (**116-834**)
- 3,5-5mm/8-5TPI (**116-835**)
- 5,5-7mm/4,5-3,5TPI (**116-836**)

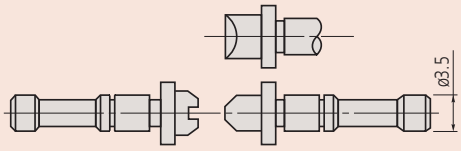

Interchangeable anvils/spindle-tips are available in sets and pairs

All products to be sold to commercial customers. Product illustrations are without obligation. Product descriptions, in particular any and all technical specifications, are only binding when explicitly agreed upon. For suggested retail prices, please refer to the separate price list.

Digimatic Screw Thread Micrometer with Interchangeable Tips

Functions	Series 326
ZERO/ABS	●
Auto Power OFF after 20 min. non use	●
2 x PRESET	●
Low voltage alarm	●
Function lock	●
Data output	●
HOLD	●

Specifications

Accuracy	Refer to the list of specifications (excluding quantizing error)
Measuring force	5-10 N
Digital step	0,001 mm
Scale	Thimble and sleeve satin chrome finish, ø18 mm
Measuring spindle	With spindle lock, ø6,35 mm, spindle pitch 0,5 mm
Battery life	approx. 2,4 years
Delivered	Including box, setting standard (60°) (from 25 mm upward), key, 1 battery Interchangeable anvils/spindle tips not included

Standard accessories

No.	Description
167-261	Setting Standard Screw Thread Micrometer, 60°, Length: 25mm
167-262	Setting Standard Screw Thread Micrometer, 60°, Length: 50mm
167-263	Setting Standard Screw Thread Micrometer, 60°, Length: 75mm

Optional accessories

No.	Description
05CZA662	Digimatic Cable with Data Button IP Type, 1m, Micrometer Type
05CZA663	Digimatic Cable with Data Button IP Type, 2m, Micrometer Type
02AZD790B	U-WAVE T Connection Cable B, with Data Button IP Micrometer Type
06ADV380B	USB Input Tool Direct (Digimatic USB), with Data Button IP Micrometer Type
167-272	Setting Standard Screw Thread Micrometer, 55°, Length: 25mm
167-273	Setting Standard Screw Thread Micrometer, 55°, Length: 50mm
167-274	Setting Standard Screw Thread Micrometer, 55°, Length: 75mm
167-275	Setting Standard Screw Thread Micrometer, 55°, Length: 100mm

Consumable spares

No.	Description
938882	Battery SR44 1.5V

Series 326

This Digimatic Screw Thread Micrometer comes with optional, interchangeable, anvils/spindle-tips that allow you to measure a wide range of metric/unified and Whitworth screw-thread pitch diameters.

Dust- and Waterproof IP65

326-251-30 with optional accessories

Interchangeable anvils/spindle tips in matching pairs

Metric

No.	Range [mm]	Accuracy [µm]	A [mm]	B [mm]	Mass [g]
326-251-30	0-25	±4	39,5	25	350
326-252-30	25-50	±4	64,5	32	380
326-253-30	50-75	±4	90	45	470
326-254-30	75-100	±5	115,6	65,5	510

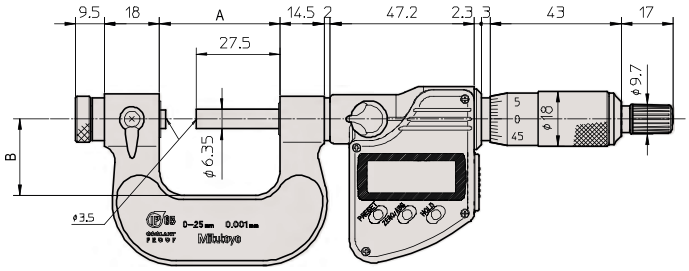

0-75 mm

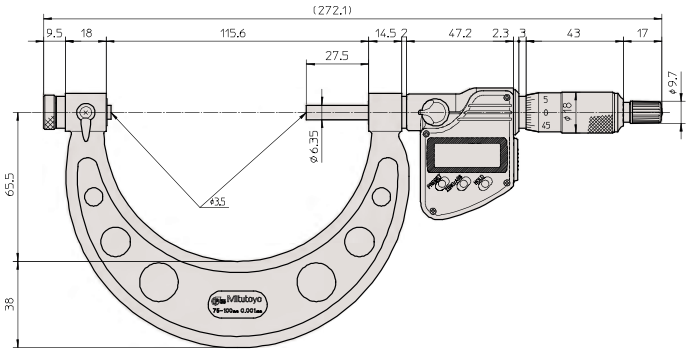

75-100 mm

Anvil/spindle-tip matching pair

All products to be sold to commercial customers. Product illustrations are without obligation. Product descriptions, in particular any and all technical specifications, are only binding when explicitly agreed upon. For suggested retail prices, please refer to the separate price list.

Screw Thread Micrometer with Interchangeable Tips

Series 126

This Screw Thread Micrometer comes with optional, interchangeable, anvils/spindle-tips that allow you to measure a wide range of metric/unified and Whitworth screw-thread pitch diameters.

126-125 with optional accessories

Interchangeable anvils/spindle tips in matching pairs

Metric

No.	Range [mm]	Accuracy [µm]	L [mm]	a [mm]	Mass [g]
126-125	0-25	±4	39,5	25	240
126-126	25-50	±4	64,5	32	290
126-127	50-75	±4	90	45	390
126-128	75-100	±5	115,6	65	450
126-129	100-125	±5	140,6	79	530
126-130	125-150	±5	165,6	93	620
126-131	150-175	±6	190,5	105	730
126-132	175-200	±6	214,5	120	860
126-133	200-225	±6	240,5	131	1030
126-134	225-250	±7	265,5	144	1200
126-135	250-275	±7	290,5	156	1370
126-136	275-300	±7	314,5	171	1540

Also available! Inch Models

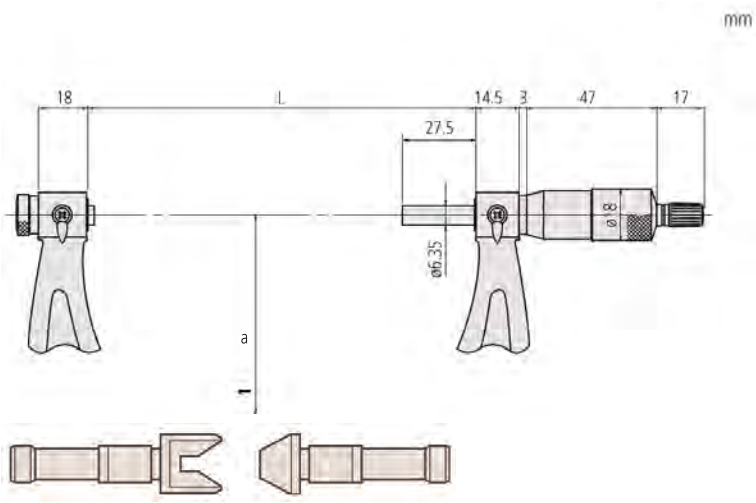

Anvil/spindle-tip matching pair

Specifications

Accuracy	Refer to the list of specifications
Scale	Thimble and sleeve satin chrome finish, ø18 mm
Measuring force	5-10 N
Graduation	0,01 mm
Measuring spindle	With spindle lock, ø 6,35 mm, spindle pitch 0,5 mm
Delivered	Including box, setting standard (60°) (from 25 mm upward), key Interchangeable anvils/spindle tips not included

Standard accessories

No.	Description
167-261	Setting Standard Screw Thread Micrometer, 60°, Length: 25mm
167-262	Setting Standard Screw Thread Micrometer, 60°, Length: 50mm
167-263	Setting Standard Screw Thread Micrometer, 60°, Length: 75mm
167-264	Setting Standard Screw Thread Micrometer, 60°, Length: 100mm
167-265	Setting Standard Screw Thread Micrometer, 60°, Length: 125mm
167-266	Setting Standard Screw Thread Micrometer, 60°, Length: 150mm
167-267	Setting Standard Screw Thread Micrometer, 60°, Length: 175mm
167-268	Setting Standard Screw Thread Micrometer, 60°, Length: 200mm
167-269	Setting Standard Screw Thread Micrometer, 60°, Length: 225mm
167-270	Setting Standard Screw Thread Micrometer, 60°, Length: 250mm
167-271	Setting Standard Screw Thread Micrometer, 60°, Length: 275mm

Optional accessories

No.	Description
167-272	Setting Standard Screw Thread Micrometer, 55°, Length: 25mm
167-273	Setting Standard Screw Thread Micrometer, 55°, Length: 50mm
167-274	Setting Standard Screw Thread Micrometer, 55°, Length: 75mm
167-275	Setting Standard Screw Thread Micrometer, 55°, Length: 100mm
167-276	Setting Standard Screw Thread Micrometer, 55°, Length: 125mm
167-277	Setting Standard Screw Thread Micrometer, 55°, Length: 150mm
167-278	Setting Standard Screw Thread Micrometer, 55°, Length: 175mm
167-279	Setting Standard Screw Thread Micrometer, 55°, Length: 200mm
167-280	Setting Standard Screw Thread Micrometer, 55°, Length: 225mm

All products to be sold to commercial customers. Product illustrations are without obligation. Product descriptions, in particular any and all technical specifications, are only binding when explicitly agreed upon. For suggested retail prices, please refer to the separate price list.

Screw Thread Micrometer with Interchangeable Tips

Series 126

Optional accessories anvils/spindle-tips

Individual measuring anvil/spindle-tip pairs

No.	Accuracy	Remarks	Metric pitch	UNF threads/inch	Whitworth threads/inch
126-801	±30'	M1 (U1)	0,4 - 0,5 mm	64 - 48 TPI	
126-802	±20'	M2 (U2)	0,6 - 0,9 mm	44 - 28 TPI	
126-803	±15'	M3 (U3)	1 - 1,75 mm	24 - 14 TPI	
126-804	±10'	M4 (U4)	2 - 3 mm	13 - 9 TPI	
126-805	±10'	M5 (U5)	3,5 - 5 mm	8 - 5 TPI	
126-806	±10'	M6 (U6)	5,5 - 7 mm	4,5 - 3,5 TPI	
126-811	±30'	W1			60 - 48 TPI
126-812	±30'	W2			48 - 40 TPI
126-813	±20'	W3			40 - 32 TPI
126-814	±20'	W4			32 - 24 TPI
126-815	±15'	W5			24 - 18 TPI
126-816	±15'	W6			18 - 14 TPI
126-817	±10'	W7			14 - 10 TPI
126-818	±10'	W8			10 - 7 TPI
126-819	±10'	W9			7 - 4,5 TPI
126-820	±10'	W10			4,5 - 3,5 TPI

Measuring anvil/spindle-tip set Metric UNF (consists of No. 126-801 to 126-806)

No.	Remarks
126-800	M1 to M6

Measuring anvil/spindle-tip set Whitworth (consists of No. 126-811 to 126-820)

No.	Remarks
126-810	W1 to W10

Ø Nominal	Thread pitch P	Pitch Ø d2
M 1	0,25	0,838
M 1,2	0,25	1,038
M 1,4	0,30	1,205
M 1,7	0,35	1,473
M 2	0,40	1,740
M 2,3	0,40	2,040
M 2,6	0,45	2,308
M 3	0,50	2,675
M 3,5	0,60	3,110
M 4	0,70	3,545
M 5	0,80	4,480
M 6	1,00	5,350
M 8	1,25	7,188
M 10	1,50	9,026
M 12	1,75	10,863

Ø Nominal	Thread pitch P	Pitch Ø d2
M 14	2,00	12,701
M 16	2,00	14,701
M 20	2,50	18,376
M 22	2,50	20,376
M 24	3,00	22,051
M 27	3,00	25,051
M 30	3,50	27,727
M 33	3,50	30,727
M 36	4,00	33,402
M 39	4,00	36,402
M 42	4,50	39,077
M 45	4,50	42,077
M 48	5,00	44,752
M 52	5,00	48,752
M 56	5,50	52,428
M 60	5,50	56,428

All products to be sold to commercial customers. Product illustrations are without obligation. Product descriptions, in particular any and all technical specifications, are only binding when explicitly agreed upon. For suggested retail prices, please refer to the separate price list.

Mitutoyo

Screw Thread Micrometer

Series 125

This Screw Thread Micrometer has a fixed anvil, offering the following benefits:
- Fixed anvil type.
- It directly indicates screw pitch diameter, meaning no need for calculation.

125-103

Metric

No.	Range [mm]	Thread to be measured (Metric/Unified)	L [mm]	a [mm]	Mass [g]
125-101	0-25	0,4-0,5 mm/ 64-48 TPI	37,2	25	200
125-102	0-25	0,6-0,9 mm/ 44-28 TPI	37,2	25	200
125-103	0-25	1-1,75 mm/ 24-14 TPI	37,2	25	200
125-104	0-25	2-3 mm/ 13-9 TPI	37,2	25	200
125-105	0-25	3,5-5 mm/ 8-5 TPI	37,2	25	200
125-106	25-50	0,4-0,5 mm/ 64-48 TPI	62,2	32	250
125-107	25-50	0,6-0,9 mm/ 44-28 TPI	62,2	32	250
125-108	25-50	1-1,75 mm/ 24-14 TPI	62,2	32	250
125-109	25-50	2-3 mm/ 13-9 TPI	62,2	32	250
125-110	25-50	3,5-5 mm/ 8-5 TPI	62,2	32	250
125-111	50-75	0,6-0,9 mm/ 44-28 TPI	87	49	260
125-112	50-75	1-1,75 mm/ 24-14 TPI	87	49	260
125-113	50-75	2-3 mm/ 13-9 TPI	87	49	260
125-114	50-75	3,5-5 mm/ 8-5 TPI	87	49	260
125-115	50-75	5,5-7 mm/ 4,5-3,5 TPI	87	49	260
125-116	75-100	0,6-0,9 mm/ 44-28 TPI	112	63	330
125-117	75-100	1-1,75 mm/ 24-14 TPI	112	63	330
125-118	75-100	2-3 mm/ 13-9 TPI	112	63	330
125-119	75-100	3,5-5 mm/ 8-5 TPI	112	63	330
125-120	75-100	5,5-7 mm/ 4,5-3,5 TPI	112	63	330

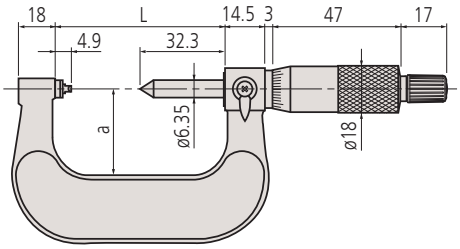

0-50 mm

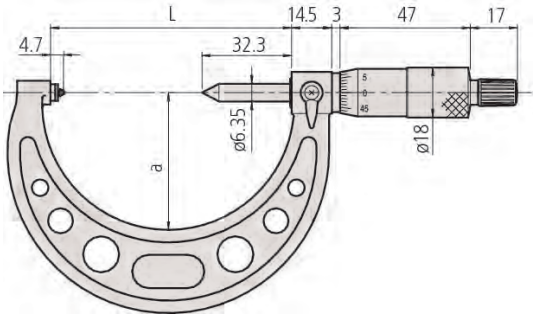

50-100 mm

Specifications

Accuracy	±(2+L/75) µm L = max. range (mm)
Graduation	0,01 mm
Delivered	Including box, setting standard 60° (from 25 mm upward), key

All products to be sold to commercial customers. Product illustrations are without obligation. Product descriptions, in particular any and all technical specifications, are only binding when explicitly agreed upon. For suggested retail prices, please refer to the separate price list.

Digimatic Gear Tooth Micrometer

Functions	Series 324
ZERO/ABS	●
Auto Power OFF after 20 min. non use	●
Low voltage alarm	●
Function lock	●
Data output	●
PRESET	●
HOLD	●

Series 324

This Gear Tooth Micrometer has an interchangeable ball insert.
- Measuring the over-pin diameter of gears with precision.
- It has interchangeable ball inserts that allow you to measure modules sized between 0,5-5,25mm.

Dust- and Waterproof IP65

TÜVRheinland CERTIFIED www.tuv.com ID 4011207400

IP65

324-251-30 with optional accessories

Specifications

Accuracy	Refer to the list of specifications (excluding quantizing error)
Scale	Thimble and sleeve satin chrome finish, ø18 mm
Measuring force	5-10 N
Digital step	0,001 mm
Measuring spindle	With spindle lock, ø6,35 mm, spindle pitch 0,5 mm
Battery life	approx. 2,4 years
Delivered	Including box, setting standard (from 25 mm upward), key, 1 battery Interchangeable anvils/spindle tips not included

Metric — Digital model

No.	Range [mm]	Accuracy [µm]	L [mm]	a [mm]	Mass [g]
324-251-30	0-25	±4	64,5	32	400
324-252-30	25-50	±4	90	45	490
324-253-30	50-75	±4	115,6	65,5	530
324-254-30	75-100	±5	140,6	79	600

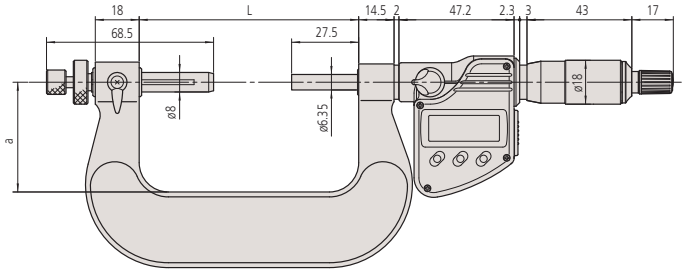

0-50 mm

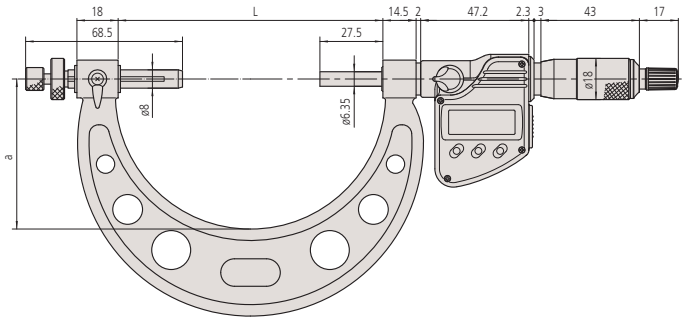

50-100 mm

Optional accessories

No.	Description
05CZA662	Digimatic Cable with Data Button IP Type, 1m, Micrometer Type
05CZA663	Digimatic Cable with Data Button IP Type, 2m, Micrometer Type
02AZD790B	U-WAVE T Connection Cable B, with Data Button IP Micrometer Type
06ADV380B	USB Input Tool Direct (Digimatic USB), with Data Button IP Micrometer Type

Consumable spares

No.	Description
938882	Battery SR44 1.5V

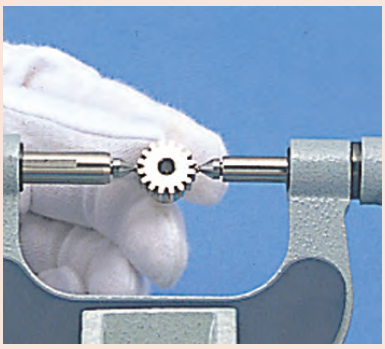

All products to be sold to commercial customers. Product illustrations are without obligation. Product descriptions, in particular any and all technical specifications, are only binding when explicitly agreed upon. For suggested retail prices, please refer to the separate price list.

Mitutoyo

Gear Tooth Micrometer

Series 124

124-173 with optional accessories

Metric

Analog model

No.	Range [mm]	Accuracy [µm]	L [mm]	a [mm]	Mass [g]
124-173	0-25	±4	64,5	32	295
124-174	25-50	±4	90	45	400
124-175	50-75	±4	115,6	65	460
124-176	75-100	±5	140,6	79	540
124-177	100-125	±5	165,6	93	640
124-178	125-150	±5	190,5	105	760
124-179	150-175	±6	214,5	120	900
124-180	175-200	±6	240,5	131	1060
124-181	200-225	±6	265,5	144	1230
124-182	225-250	±7	290,5	156	1430
124-183	250-275	±7	314,5	171	1620
124-195	275-300	±7	353	187	2070

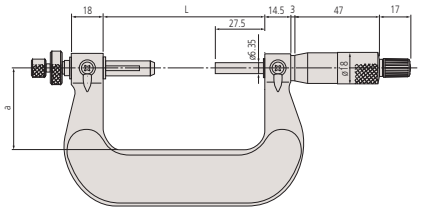

0-50 mm

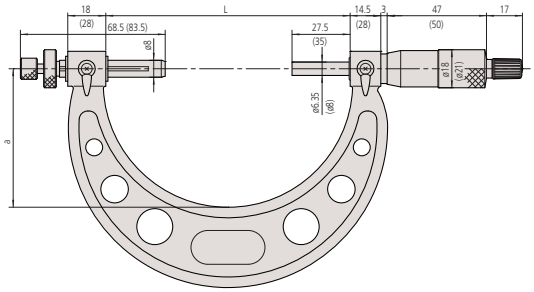

50-300 mm

Specifications

Accuracy	Refer to the list of specifications
Measuring force	5-10 N
Graduation	0,01 mm
Scale	Thimble and sleeve satin chrome finish, Ø18 mm
Measuring spindle	With spindle lock, Ø6,35 mm, spindle pitch 0,5 mm
Delivered	Including box, setting standard (from 25 mm upward), key, interchangeable anvils/spindle tips not included

Interchangeable Ball Anvil/Spindle Tip Set

Series 124/ 324

These optional interchangeable anvils allow you to measure the over-pin diameter of gears with precision.

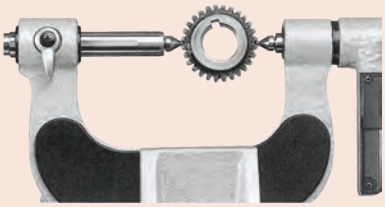

Metric

No.	Remarks	Diameter	Gear module	Dia. pitch
124-801	carbide-tipped type	0,8 mm	0,5-0,55	50
124-802	carbide-tipped type	1 mm	0,6-0,65	45
124-821	carbide-tipped type	1,5 mm	0,9-1	28-26
124-805	carbide-tipped type	2 mm	1,25	22
124-822		2,5 mm	1,5	17
124-807		3 mm	1,75	15
124-823		3,5 mm	2	13
124-810		4 mm	2,25	11
124-824		4,5 mm	2,5	10
124-812		5 mm	2,75	9
124-814		6 mm	3,5	7
124-816		7 mm	4	6,5
124-819		8 mm	4,75	5,5

Also available! Inch/Metric Models

All products to be sold to commercial customers. Product illustrations are without obligation. Product descriptions, in particular any and all technical specifications, are only binding when explicitly agreed upon. For suggested retail prices, please refer to the separate price list.

Digimatic Disc Micrometer

Functions	Series 323
ORIGIN	●
ZERO/ABS	●
Auto Power OFF after 20 min. non use	●
Low voltage alarm	●
Function lock	●
Data output	●
HOLD	●

Specifications

Accuracy	Refer to the list of specifications (excluding quantizing error)
Measuring force	5-10 N
Digital step	0,001 mm
Scale	Thimble and sleeve satin chrome finish, ø18 mm
Flatness	1 µm
Parallelism	4 µm for models up to 50 mm 6 µm for models up to 100 mm
Measuring spindle	With spindle lock, spindle pitch 0,5 mm
Measurable module	0,5-6
Battery life	approx. 2,4 years
Delivered	Including box, setting standard (from 25 mm upward), key, 1 battery

Optional accessories

No.	Description
05CZA662	Digimatic Cable with Data Button IP Type, 1m, Micrometer Type
05CZA663	Digimatic Cable with Data Button IP Type, 2m, Micrometer Type
02AZD790B	U-WAVE T Connection Cable B, with Data Button IP Micrometer Type
06ADV380B	USB Input Tool Direct (Digimatic USB), with Data Button IP Micrometer Type

Consumable spares

No.	Description
938882	Battery SR44 1.5V

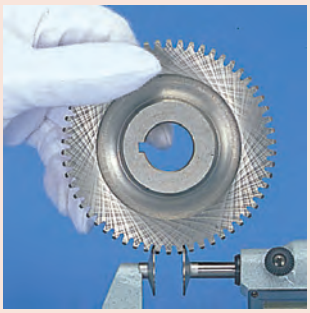

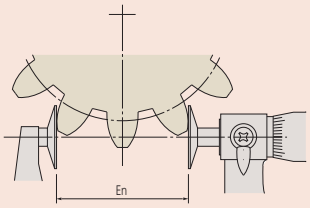

Root tangent length of gear (En)

Series 323

This Digimatic Disc Micrometer enables you to measure hard-to-reach features,
offering you the following benefits:

- Measuring the root tangent length of spur and helical gears.
- You can measure recessed features that are difficult to reach with a standard micrometer.

323-250-30

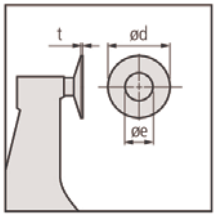

Metric

No.	Range [mm]	Accuracy [µm]	L [mm]	a [mm]	b [mm]	c [mm]	e [mm]	d [mm]	t [mm]	Mass [g]
323-250-30	0-25	±4	39,7	4,5	9,2	25	8	20	0,7	290
323-251-30	25-50	±4	65,6	5,4	11	31	8	20	0,7	355
323-252-30	50-75	±6	90,7	5,5	12,2	50	8	20	0,7	555
323-253-30	75-100	±6	112,5	5,5	13,5	60	8	20	0,7	610

mm

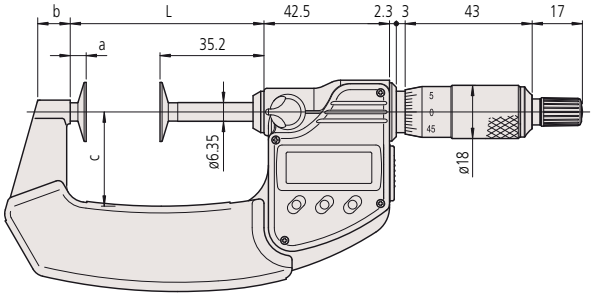

0-75 mm

mm

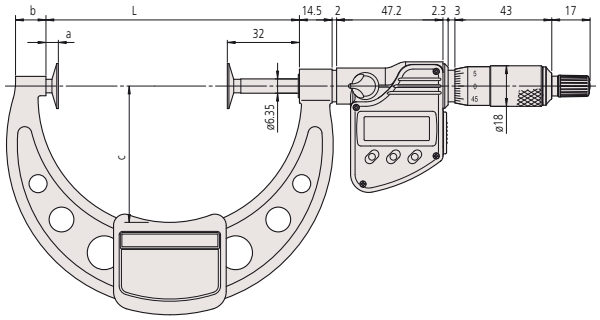

75-100 mm

All products to be sold to commercial customers. Product illustrations are without obligation. Product descriptions, in particular any and all technical specifications, are only binding when explicitly agreed upon. For suggested retail prices, please refer to the separate price list.

Disc Micrometer

Series 123

This Disc Micrometer enables you to measure hard-to-reach features, offering you the following benefits:

- Measuring the root tangent length of spur and helical gears.
- You can measure recessed features that are difficult to reach with a standard micrometer.

123-101

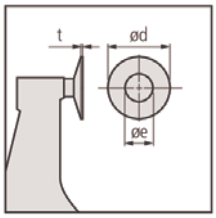

Metric

No.	Range [mm]	Remarks	Accuracy [µm]	L [mm]	a [mm]	b [mm]	c [mm]	e [mm]	d [mm]	t [mm]	Mass [g]
123-101	0-25		±4	37,5	6	14	25	8	20	0,7	200
123-113	0-25	disks have carbide tips	±4	39,7	4,5	9,2	25	9,8	20	0,7	200
123-102	25-50		±4	62,5	6	14	32	8	20	0,7	250
123-114	25-50	disks have carbide tips	±4	65,6	5,4	11	31	9,8	20	0,7	250
123-103	50-75		±6	87	5,5	11	49	8	20	0,7	300
123-115	50-75	disks have carbide tips	±6	90,7	5,5	12,2	50	9,8	20	0,7	300
123-104	75-100		±6	112	5,5	11	63	8	20	0,7	375
123-116	75-100	disks have carbide tips	±6	112,5	5,5	13,5	60	9,8	20	0,7	375
123-105	100-125		±7	137,5	6	12	79	12	30	1	520
123-106	125-150		±7	162,5	6	15	94	12	30	1	570
123-107	150-175		±8	187,5	6	16	106	12	30	1	730
123-108	175-200		±8	212,5	6	15	118	12	30	1	890
123-109	200-225		±8	237,5	6	14	130	12	30	1	1000
123-110	225-250		±9	262,5	6	14	143	12	30	1	1200
123-111	250-275		±9	287,5	6	15	156	12	30	1	1410
123-112	275-300		±9	312,5	6	15	169	12	30	1	1680

Also available! Inch Models

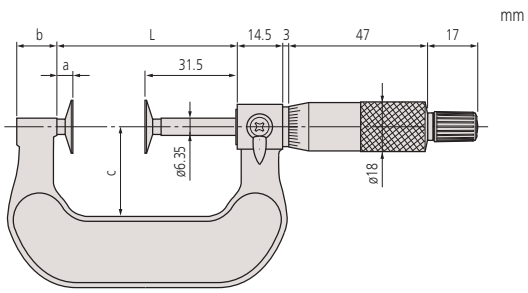

0-50 mm

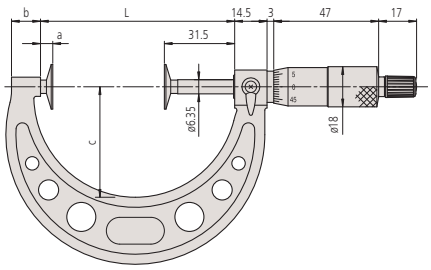

50-300 mm

Specifications

Accuracy	Refer to the list of specifications
Measuring force	5-10 N
Graduation	0,01 mm
Scale	Thimble and sleeve satin chrome finish, ø 18 mm
Flatness	1 µm for models up to 100 mm 1,6 µm for models over 100 mm
Parallelism	4 µm for models up to 50 mm 6 µm for models up to 100 mm (5+L/75) µm for models over 100 mm L = max. range (mm)
Measuring spindle	With spindle lock, spindle pitch 0,5 mm
Measurable module	0,5-6 (0,7-11 : models over 100 mm)
Delivered	Including box, setting standard (from 25 mm upward), key

All products to be sold to commercial customers. Product illustrations are without obligation. Product descriptions, in particular any and all technical specifications, are only binding when explicitly agreed upon. For suggested retail prices, please refer to the separate price list.

Digimatic Disc Micrometer Non-Rotating Spindle Type

Functions	Series 369
ORIGIN	●
ZERO/ABS	●
Auto Power OFF after 20 min. non use	●
Low voltage alarm	●
Function lock	●
Data output	●
HOLD	●

Specifications

Accuracy	Refer to the list of specifications (excluding quantizing error)
Measuring force	3-8 N
Digital step	0,001 mm
Scale	Thimble and sleeve satin chrome finish, ø18 mm
Flatness	1 µm
Parallelism	4 µm for models up to 50 mm 6 µm for models over 50 mm
Measuring spindle	With spindle lock, spindle pitch 0,5 mm
Battery life	approx. 2,4 years
Delivered	Including box, setting standard (from 25 mm upward), key, 1 battery

Optional accessories

No.	Description
05CZA662	Digimatic Cable with Data Button IP Type, 1m, Micrometer Type
05CZA663	Digimatic Cable with Data Button IP Type, 2m, Micrometer Type
02AZD790B	U-WAVE T Connection Cable B, with Data Button IP Micrometer Type
06ADV380B	USB Input Tool Direct (Digimatic USB), with Data Button IP Micrometer Type

Consumable spares

No.	Description
938882	Battery SR44 1.5V

Series 369

This Digimatic Disc Micrometer allows you to measure a range of different materials. It offers you the following benefits:

- Non-rotating spindle and disc-shaped measuring surfaces.
- Measuring the root tangent length of spur and helical gears
- Measurable range of gear pitch: 0,5-6 module
- Suitable for measuring felt, rubber, cardboard, fabric etc.

369-250-30

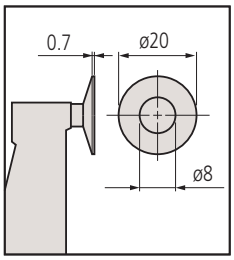

Metric

No.	Range [mm]	Accuracy [µm]	L [mm]	a [mm]	b [mm]	c [mm]	Mass [g]
369-250-30	0-25	±4	58,5	12,9	7	32	340
369-251-30	25-50	±4	83,5	12,9	9,8	47	480
369-252-30	50-75	±6	108,5	12,9	11,2	60	635
369-253-30	75-100	±6	112,5	5,5	13,5	60	775

mm

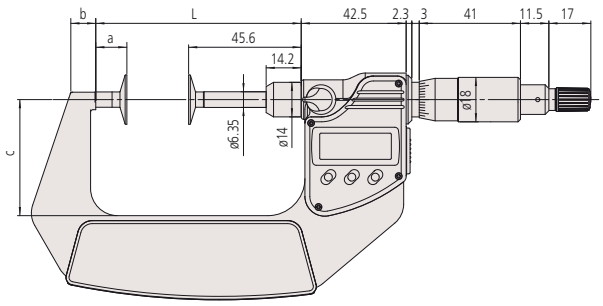

0-75 mm

mm

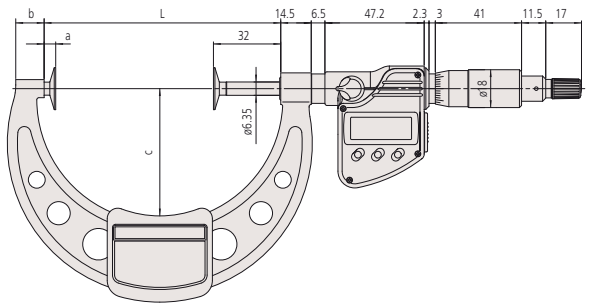

75-100 mm

All products to be sold to commercial customers. Product illustrations are without obligation. Product descriptions, in particular any and all technical specifications, are only binding when explicitly agreed upon. For suggested retail prices, please refer to the separate price list.

ABSOLUTE Digimatic Disc Micrometer QuickMike

Series 369

ABSOLUTE® IP54

The ABSOLUTE Digimatic Disco Micrometer QuickMike allows you measure a range of different materials.
It offers you the following benefits:
- It has a fast spindle feed of 10mm/rev.
- Suitable for measuring felt, rubber, cardboard, fabric etc.
- It features a non-rotating spindle and disc-shaped measuring surfaces.

369-411

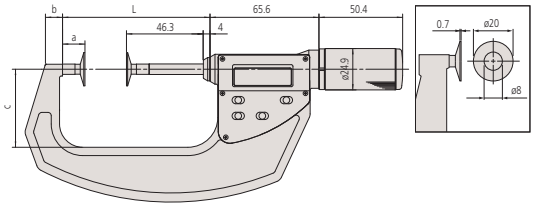

Metric

No.	Range [mm]	Accuracy [µm]	L [mm]	a [mm]	b [mm]	c [mm]	Mass [g]
369-411	0-30	±4	63,8	13,5	8,5	36	360
369-412	25-55	±4	88,8	13,5	10,3	47	490

Also available! Inch/Metric Models

Functions	Series 369
ORIGIN	●
ZERO/ABS	●
ON/OFF	●
Low voltage alarm	●
Data output	●
HOLD	●

Specifications

Accuracy	Refer to the list of specifications (excluding quantizing error)
Measuring force	3-8 N
Digital step	0,001 mm
Flatness	1 µm
Parallelism	4 µm
Battery life	approx. 1 year
Delivered	Including box, setting standard (from 25 mm upward), 1 battery

Optional accessories

No.	Description
937387	Digimatic Cable, Round 6-Pin Type, 1 m
965013	Digimatic Cable, Round 6 -Pin Type, 2m
02AZD790E	U-WAVE T Connection Cable E, Round 6-Pin Type
06ADV380E	USB Input Tool Direct (Digimatic USB) cable, 2m, Round 6-Pin Type

Consumable spares

No.	Description
938882	Battery SR44 1.5V

Series 227

ABSOLUTE®

This Micrometer comes with adjustable measuring force, allowing you to measure various kinds of workpiece.
It offers the following benefits:
- It's designed for applications that require a constant, low measuring force such as measuring felt, fabric, paper and plastic and rubber parts.
- The thimble has a constant and low measuring force mechanism.
- It features a non-rotating spindle and disc-shaped measuring surfaces.
- It has a fast spindle feed of 10mm/rev.

227-221

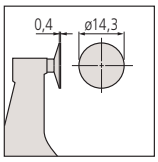

Circular Measuring Surface

Metric

QuickMike type adjustable measuring force

No.	Range [mm]	Accuracy	Measuring force settings(1) [N]	Measuring force accuracy (1) [N]	Mass [g]
227-223	0-10	±4 µm	2; 4; 6; 8; 10	±0,4 + (for setting/10)	340
227-221	0-15	±4 µm	0,5; 1; 1,5; 2; 2,5	±0,1 + (for setting/10)	300

(1) Only valid for instrument orientation within ±3 degrees of horizontal when measuring.

Force adjustable 0,5-2,5 N (227-221)

Force adjustable: 2-10 N (227-223)

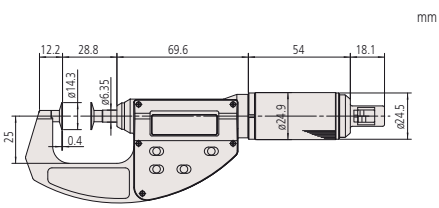

Functions	Series 227
ORIGIN	●
ON/OFF	●
Low voltage alarm	●
Data output	●
HOLD	●

Specifications

Measuring direction	Horizontal
Accuracy	Refer to the list of specifications (excluding quantizing error)
Digital step	0,001 mm
Flatness	1 µm
Parallelism	3 µm
Battery life	approx. 3 years
Delivered	Including box, screwdriver, 1 battery

Optional accessories

No.	Description
937387	Digimatic Cable, Round 6-Pin Type, 1 m
965013	Digimatic Cable, Round 6 -Pin Type, 2m
06ADV380E	USB Input Tool Direct (Digimatic USB) cable, 2m, Round 6-Pin Type
02AZD790E	U-WAVE T Connection Cable E, Round 6-Pin Type

Consumable spares

No.	Description
938882	Battery SR44 1.5V

All products to be sold to commercial customers. Product illustrations are without obligation. Product descriptions, in particular any and all technical specifications, are only binding when explicitly agreed upon. For suggested retail prices, please refer to the separate price list.

Disc Micrometer Non-Rotating Spindle Type

Series 169

This Disc Micrometer has a non-rotating spindle and allows you measure a range of different materials.
It offers you the following benefits:
- It features a non-rotating spindle and disc-shaped measuring surfaces.
- Measuring the root tangent length of spur and helical gears
- Measurable range of gear pitch: 0,5-6 module
- It's suitable for measuring materials such as felt, rubber, cardboard and fabric.

Specifications

Accuracy	Refer to the list of specifications.
Scale	Thimble and sleeve satin chrome finish, ø 18 mm
Graduation	0,01mm
Flatness	1 µm
Parallelism	3 µm (169-101) 4 µm for models up to 50 mm 6 µm for models over 50 mm
Measuring spindle	ø 8 mm, spindle pitch 0,5 mm
Measuring force	8,02 N ± 0,8 N (169-101), 5 - 10
Delivered	Including box, setting standard (from 25 mm upward), key

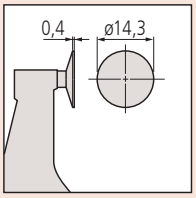

169-101 no central recess

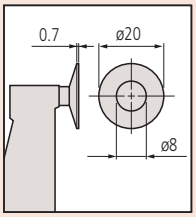

With annular measuring surfaces

169-201

Metric

No.	Range [mm]	Accuracy [µm]	L [mm]	a [mm]	b [mm]	c [mm]	Mass [g]
169-101	0-25	±4	37,5	6	13,5	25	230
169-201	0-25	±4	37,5	6	13,5	25	230
169-202	25-50	±4	62,5	6	13,5	32	280
169-205	50-75	±6	87	5,5	13	49	315
169-207	75-100	±6	112	5,5	13	63	400

Also available! Inch Models

mm

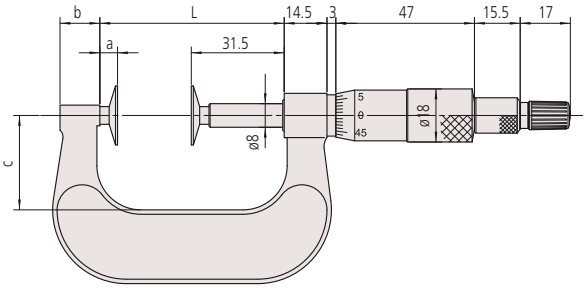

0-50 mm

mm

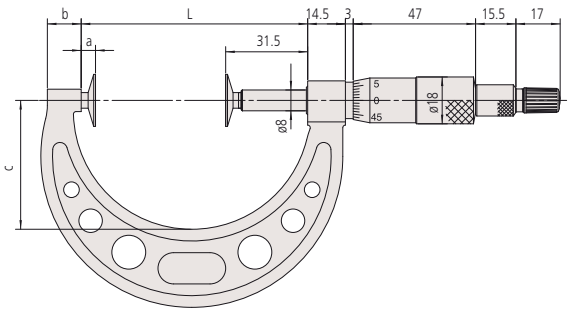

50-100 mm

All products to be sold to commercial customers. Product illustrations are without obligation. Product descriptions, in particular any and all technical specifications, are only binding when explicitly agreed upon. For suggested retail prices, please refer to the separate price list.

Digimatic Spline Micrometer

Series 331

This Digimatic Spline Micrometer makes it easy for you to measure grooves and shaped parts.
It offers you the following benefits:
- Stepped measuring surfaces.
- Suitable for measuring grooves, splined shafts, recesses, shaped parts, etc.

Dust- and Waterproof IP65
www.tuv.com ID 4011207400

331-251-30

Metric

No.	Range [mm]	Anvil/ Tip	Accuracy [µm]	L [mm]	a [mm]	b [mm]	c [mm]	Mass [g]
331-251-30	0-25	A	±2	58,2	17,5	7,3	32	330
331-261-30	0-25	B	±2	58,2	17,5	7,3	32	330
331-252-30	25-50	A	±2	83,2	17,5	10,1	47	470
331-262-30	25-50	B	±2	83,2	17,5	10,1	47	470
331-253-30	50-75	A	±2	108,2	17,5	11,5	60	625
331-263-30	50-75	B	±2	108,2	17,5	11,5	60	625
331-254-30	75-100	A	±3	132,8	20,3	16,7	76	565
331-264-30	75-100	B	±3	132,8	20,3	16,7	76	565

mm

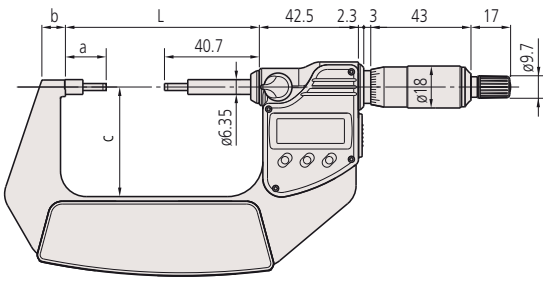

0-75 mm

mm

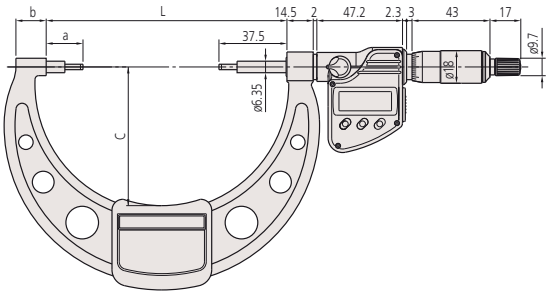

75-100 mm

Functions	Series 331
ORIGIN	●
ZERO/ABS	●
Auto Power OFF after 20 min. non use	●
Low voltage alarm	●
Function lock	
Data output	●
HOLD	●

Specifications

Accuracy	Refer to the list of specifications (excluding quantizing error)
Measuring force	5-10 N
Digital step	0,001 mm
Scale	Thimble and sleeve satin chrome finish, ø18 mm
Flatness	0,3µm
Parallelism	(2+L/100) µm, L = max. range (mm)
Measuring surfaces	Carbide tipped, micro-lap finish
Measuring spindle	With spindle lock, ø6,35 mm, spindle pitch 0,5 mm
Battery life	approx 2,4 years
Delivered	Including box, setting standard (from 25 mm upward), key, 1 battery

Optional accessories

No.	Description
05CZA662	Digimatic Cable with Data Button IP Type, 1m, Micrometer Type
05CZA663	Digimatic Cable with Data Button IP Type, 2m, Micrometer Type
02AZD790B	U-WAVE T Connection Cable B, with Data Button IP Micrometer Type
06ADV380B	USB Input Tool Direct (Digimatic USB), with Data Button IP Micrometer Type

Consumable spares

No.	Description
938882	Battery SR44 1.5V

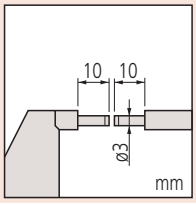

Type A

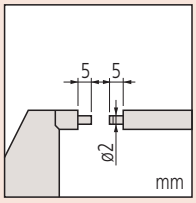

Type B

All products to be sold to commercial customers. Product illustrations are without obligation. Product descriptions, in particular any and all technical specifications, are only binding when explicitly agreed upon. For suggested retail prices, please refer to the separate price list.

Spline Micrometer

Series 111

This Spline Micrometer makes it easy for you to measure grooves and shaped parts.
It offers you the following benefits:
- Stepped measuring surfaces.
- Suitable for measuring grooves, splined shafts, recesses, shaped parts, etc.

Specifications

Accuracy	Refer to the list of specifications
Measuring force	5-10 N
Graduation	0,01 mm
Scale	Thimble and sleeve satin chrome finish ø18 mm
Flatness	0,3 µm
Parallelism	(2+L/100) µm, L = max. range (mm)
Measuring surfaces	carbide-tipped, micro-lap finish, stepped
Measuring spindle	With spindle lock, Ø 6,35 mm, spindle pitch 0,5 mm
Delivered	Including box, setting standard (from 25 mm upward), key

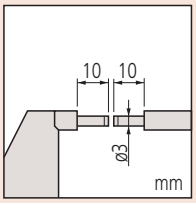

Type A

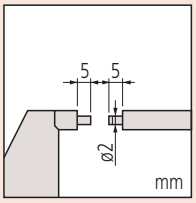

Type B

111-115

Metric

No.	Range [mm]	Anvil/ Tip	Accuracy [µm]	L [mm]	a [mm]	b [mm]	c [mm]	Mass [g]
111-115	0-25	A	±3	54,5	17,5	10	38	205
111-215	0-25	B	±3	54,5	17,8	10	38	205
111-116	25-50	A	±3	79,5	17,8	12	49	305
111-117	50-75	A	±3	104,5	17,8	14	60	370
111-118	75-100	A	±4	132,3	20,3	16,7	79	500
111-119	100-125	A	±4	157,7	20,7	18,8	94	655
111-120	125-150	A	±4	183,1	21,1	19,1	106	710
111-121	150-175	A	±5	208,3	21,3	18,2	118	900
111-122	175-200	A	±5	233,7	21,7	16,8	130	1040
111-123	200-225	A	±5	257,5	20,5	18	143	1245
111-124	225-250	A	±6	283,5	21,5	18	156	1395
111-125	250-275	A	±6	308,5	21,5	18	169	1555
111-126	275-300	A	±6	333,5	21,5	18	181	1975

Also available! Inch Models

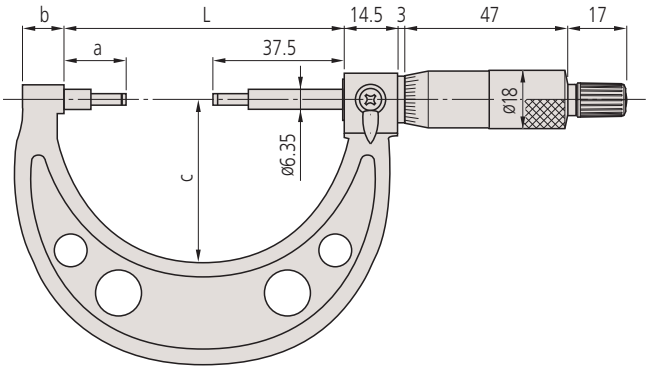

All products to be sold to commercial customers. Product illustrations are without obligation. Product descriptions, in particular any and all technical specifications, are only binding when explicitly agreed upon. For suggested retail prices, please refer to the separate price list.

Digimatic Tube Micrometer

Series 395

This Digimatic Tube Micrometer allows you to measure curved surfaces such as the wall thickness of tubes, bearings and rings.

Dust- and Waterproof IP65

www.tuv.com ID 4011207400

395-251-30

Metric Model with spherical anvil

No.	Range [mm]	Anvil/ Tip	Accuracy [µm]	D [mm]	b [mm]	c [mm]	Mass [g]
395-251-30	0-25	Type A	±2	15	9	25	270
395-252-30	25-50	Type A	±2	15	9,8	32	330
395-253-30	50-75	Type A	±2	19	12,6	47	470
395-254-30	75-100	Type A	±3	20	14	60	625

Metric Model with two spherical anvils

No.	Range [mm]	Anvil/ Tip	Accuracy [µm]	D [mm]	b [mm]	c [mm]	Mass [g]
395-271-30	0-25	Type B	±2	15	9	25	270
395-272-30	25-50	Type B	±2	15	9,8	32	330
395-273-30	50-75	Type B	±2	19	12,6	32	470
395-274-30	75-100	Type B	±3	20	14	60	625

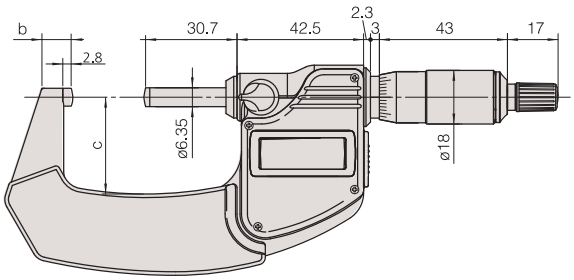

0-50 mm

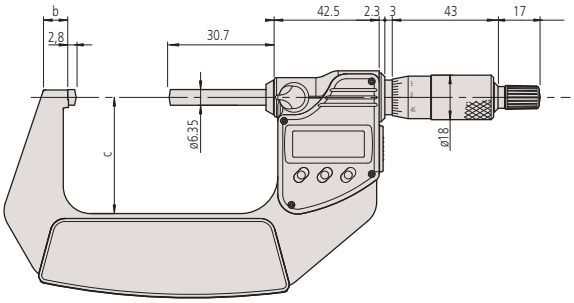

50-100 mm

Functions	Series 395
ORIGIN	●
ZERO/ABS	●
Auto Power OFF after 20 min. non use	●
Low voltage alarm	●
Function lock	●
Data output	●
HOLD	●

Specifications

Accuracy	Refer to the list of specifications (excluding quantizing error)
Measuring force	5-10 N
Digital step	0,001 mm
Scale	Thimble and sleeve satin chrome finish, ø18 mm
Flatness	0,6 µm
Measuring surfaces	Carbide tipped, micro-lap finish
Measuring spindle	With spindle lock, ø 6,35 mm, spindle pitch 0,5 mm
Battery life	approx. 2,4 years
Delivered	Including box, setting standard (from 25 mm upward), key, 1 battery

Optional accessories

No.	Description
05CZA662	Digimatic Cable with Data Button IP Type, 1m, Micrometer Type
05CZA663	Digimatic Cable with Data Button IP Type, 2m, Micrometer Type
02AZD790B	U-WAVE T Connection Cable B, with Data Button IP Micrometer Type
06ADV380B	USB Input Tool Direct (Digimatic USB), with Data Button IP Micrometer Type

Consumable spares

No.	Description
938882	Battery SR44 1.5V

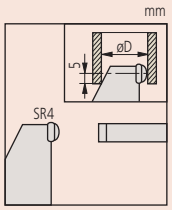

Type A

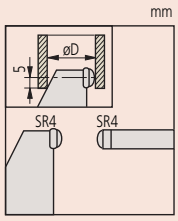

Type B

All products to be sold to commercial customers. Product illustrations are without obligation. Product descriptions, in particular any and all technical specifications, are only binding when explicitly agreed upon. For suggested retail prices, please refer to the separate price list.

Digimatic Tube Micrometer

Series 395

This Digimatic Tube Micrometer allows you to measure curved surfaces such as the wall thickness of tubes, bearings and rings.

Dust- and Waterproof IP65

TÜVRheinland CERTIFIED

www.tuv.com ID 4011207400

IP65

Functions	Series 395
ORIGIN	●
ZERO/ABS	●
Auto Power OFF after 20 min. non use	●
Low voltage alarm	●
Function lock	●
Data output	●
HOLD	●

Specifications

Accuracy	Refer to the list of specifications (excluding quantizing error)
Measuring force	3-8 N
Digital step	0,001 mm
Scale	Thimble and sleeve satin chrome finish, ø18 mm
Flatness	0,6 µm
Measuring surfaces	Carbide tipped, micro-lap finish (spindle) anvil: hardened steel
Measuring spindle	with spindle lock, ø6,35 mm, spindle pitch 0,5 mm
Battery life	approx. 2,4 years
Delivered	Including box, setting standard (from 25 mm upward), key, 1 battery

Optional accessories

No.	Description
05CZA662	Digimatic Cable with Data Button IP Type, 1m, Micrometer Type
05CZA663	Digimatic Cable with Data Button IP Type, 2m, Micrometer Type
02AZD790B	U-WAVE T Connection Cable B, with Data Button IP Micrometer Type
06ADV380B	USB Input Tool Direct (Digimatic USB), with Data Button IP Micrometer Type

Consumable spares

No.	Description
938882	Battery SR44 1.5V

395-261-30

395-262-30

395-263-30

395-264-30

Metric

No.	Range [mm]	Anvil/ Tip	Accuracy [µm]	L [mm]	D [mm]	Mass [g]
395-261-30	0-25	Type A	±3	4	2	270
395-262-30	0-25	Type B	±3	4	3,6	270
395-263-30	0-25	Type C	±3	12	4,8	310
395-264-30	0-25	Type D	±3	22	8,2	310

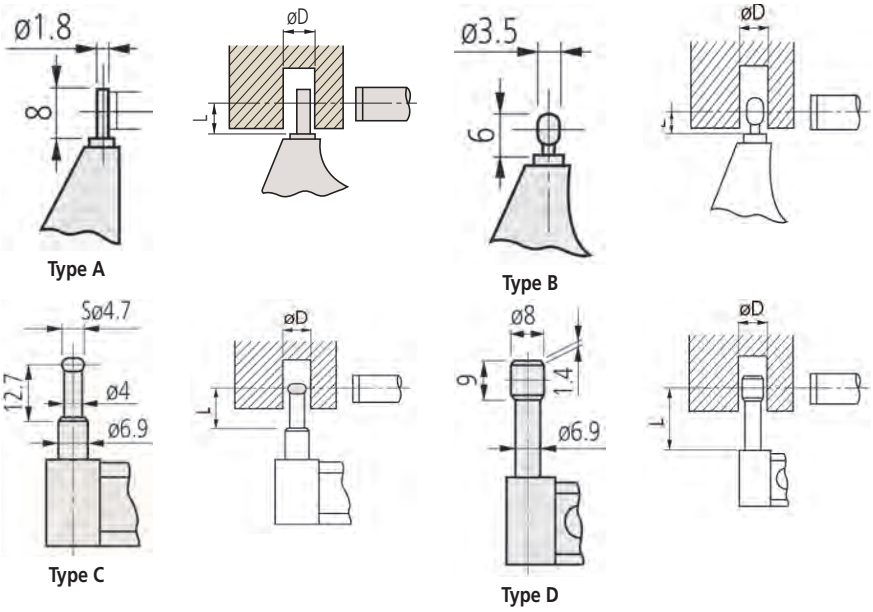

All products to be sold to commercial customers. Product illustrations are without obligation. Product descriptions, in particular any and all technical specifications, are only binding when explicitly agreed upon. For suggested retail prices, please refer to the separate price list.

Mitutoyo

Tube Micrometer

Series 115

This Tube Micrometer allows you to measure curved surfaces such as the wall thickness of tubes, bearings and rings.

115-215

Metric

No.	Range [mm]	Remarks	Accuracy [µm]	L [mm]	D [mm]	Mass [g]
115-302	0-25	Type A	±3	4	2	180
115-308	0-25	Type B	±3	4	3,6	180
115-315	0-25	Type C	±3	12	4,8	180
115-316	0-25	Type D	±3	22	8,2	180
115-303	25-50	Type A	±3	4	2	240
115-309	25-50	Type B	±3	4	3,6	240

Metric

Model with spherical anvil

No.	Range [mm]	Remarks	Accuracy [µm]	D [mm]	Mass [g]
115-115	0-25	Type E	±3	10	180
115-116	25-50	Type E	±3	11	240
115-117	50-75	Type E	±3	17	315
115-118	75-100	Type E	±4	18	375

Metric

Model with spherical anvil and spindle face

No.	Range [mm]	Remarks	Accuracy [µm]	D [mm]	Mass [g]
115-215	0-25	Type F	±3	10	180
115-216	25-50	Type F	±3	11	240
115-217	50-75	Type F	±3	17	315
115-218	75-100	Type F	±4	18	375

Also available! Inch Models

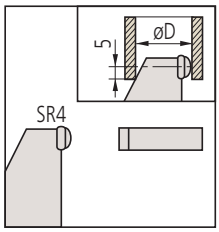

Type E

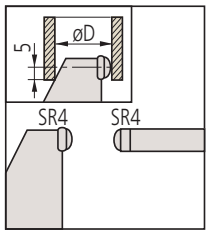

Type F

Specifications

Accuracy	Refer to the list of specifications
Graduation	0,01 mm
Scale	Thimble and sleeve satin chrome finish, ø18 mm
Measuring surfaces	Spindle and anvil: carbide-tipped, micro-lap finish (115-1xx, 115-2xx) spindle: carbide tipped anvil: hardened steel (115-3xx)
Measuring spindle	With spindle lock, Ø 6,35 mm, spindle pitch 0,5 mm
Measuring force	5-10 N/ 3-8 N (Type A, B, C, D)
Delivered	Including box, setting standard (from 25 mm upward), key

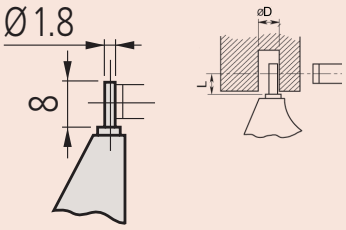

Type A

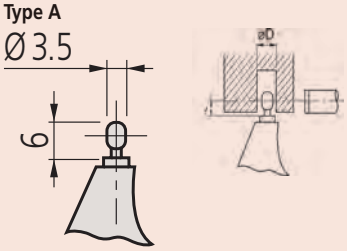

Type B

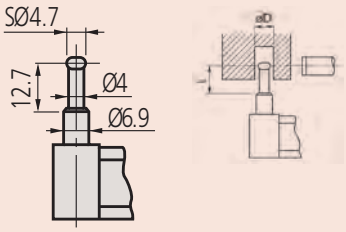

Type C

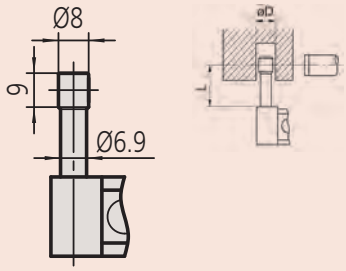

Type D

All products to be sold to commercial customers. Product illustrations are without obligation. Product descriptions, in particular any and all technical specifications, are only binding when explicitly agreed upon. For suggested retail prices, please refer to the separate price list.

Digimatic Point Micrometer

Functions	Series 342
ORIGIN	●
ZERO/ABS	●
Auto Power OFF after 20 min. non use	●
Low voltage alarm	●
Function lock	●
Data output	●

Specifications

Accuracy	Refer to the list of specifications (excluding quantizing error)
Measuring force	3-8 N
Digital step	0,001 mm
Scale	Thimble and sleeve satin chrome finish, ø18 mm
Measuring surfaces	Carbide tipped and conical spindle and anvil, measuring point radius 0,3 mm
Measuring spindle	with spindle lock, ø 6,35 mm, spindle pitch 0,5 mm
Battery life	approx. 2,4 years
Delivered	Including box, setting standard (from 25 mm upward), key, 1 battery

Optional accessories

No.	Description
05CZA662	Digimatic Cable with Data Button IP Type, 1m, Micrometer Type
05CZA663	Digimatic Cable with Data Button IP Type, 2m, Micrometer Type
02AZD790B	U-WAVE T Connection Cable B, with Data Button IP Micrometer Type
06ADV380B	USB Input Tool Direct (Digimatic USB), with Data Button IP Micrometer Type

Consumable spares

No.	Description
938882	Battery SR44 1.5V

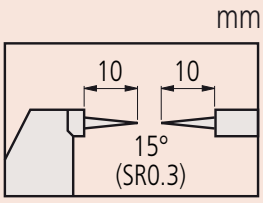

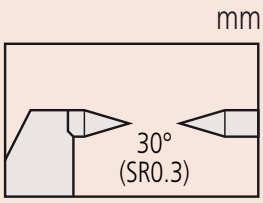

Series 342

This Digimatic Point Micrometer features a pointed anvil and spindle, and offers the following benefits:

- Its pointed anvil and spindle has a choice of included angle, ending in small-radius contact points.
- You can use it to measure grooves, steps and similar.

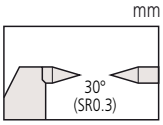

342-251-30

Metric

No.	Range [mm]	Accuracy [µm]	L [mm]	a [mm]	b [mm]	c [mm]	Point	Mass [g]
342-251-30	0-25	±2	58,2	12,5	7,3	32	15°	330
342-261-30	0-25	±2	58,2	12,5	7,3	32	30°	330
342-252-30	25-50	±2	83,2	12,5	10,1	47	15°	470
342-262-30	25-50	±2	83,2	12,5	10,1	47	30°	470
342-253-30	50-75	±2	108,2	12,5	11,5	60	15°	625
342-263-30	50-75	±2	108,2	12,5	11,5	60	30°	625
342-254-30	75-100	±3	132,8	15,3	16,7	76	15°	565
342-264-30	75-100	±3	132,8	15,3	16,7	76	30°	565

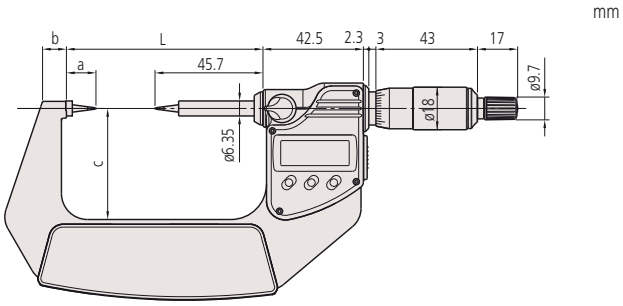

0-75 mm

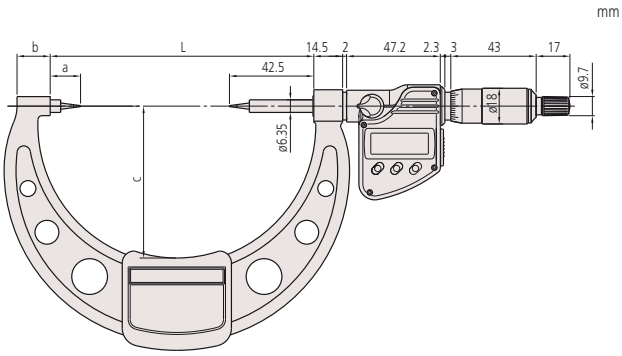

75-100 mm

All products to be sold to commercial customers. Product illustrations are without obligation. Product descriptions, in particular any and all technical specifications, are only binding when explicitly agreed upon. For suggested retail prices, please refer to the separate price list.

Point Micrometer

Series 112

This Point Micrometer features a pointed anvil and spindle, and offers the following benefits:
- Its pointed anvil and spindle has a choice of included angle, ending in small-radius contact points.
- You can use it to measure grooves, steps and similar.

112-201

Metric — Carbide tip

No.	Range [mm]	Accuracy [µm]	Point	L [mm]	a [mm]	b [mm]	c [mm]	Mass [g]
112-165	0-25	±3	15°	55,3	12,8	10	38	205
112-213	0-25	±3	30°	55,3	12,8	10	38	205
112-166	25-50	±3	15°	80,3	12,8	12	49	305
112-214	25-50	±3	30°	80,3	12,8	12	49	305
112-167	50-75	±3	15°	105,3	12,8	14	60	370
112-215	50-75	±3	30°	105,3	12,8	14	60	370
112-168	75-100	±4	15°	132,8	15,3	17	79	500
112-216	75-100	±4	30°	132,8	15,3	17	79	500

Metric — Hardened steel tip

No.	Range [mm]	Accuracy [µm]	Point	L [mm]	a [mm]	b [mm]	c [mm]	Mass [g]
112-153	0-25	±3	15°	55,3	12,8	10	38	205
112-201	0-25	±3	30°	55,3	12,8	10	38	205
112-154	25-50	±3	15°	80,3	12,8	12	49	305
112-202	25-50	±3	30°	80,3	12,8	12	49	305
112-155	50-75	±3	15°	105,3	12,8	14	60	370
112-203	50-75	±3	30°	105,3	12,8	14	60	370
112-156	75-100	±4	15°	132,8	15,3	17	79	500
112-204	75-100	±4	30°	132,8	15,3	17	79	500

Also available! Inch Models

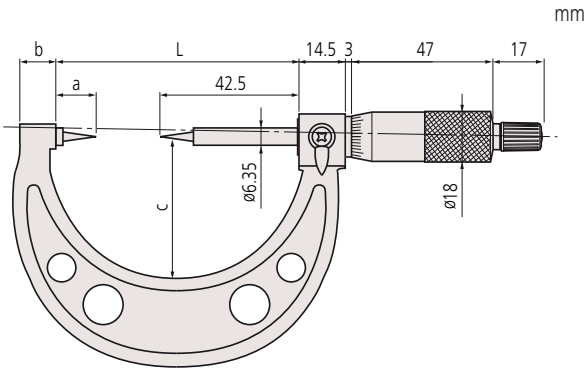

Specifications

Accuracy	Refer to the list of specifiactions
Measuring force	3-8 N
Graduation	0,01 mm
Scale	Thimble and sleeve satin chrome finish ø18 mm
Measuring surfaces	Carbide pointed or hardened steel spindle and anvil, measuring point radius 0,3 mm
Measuring spindle	With spindle lock, spindle pitch 0,5 mm
Delivered	Including box, setting standard (from 25 mm upward), key

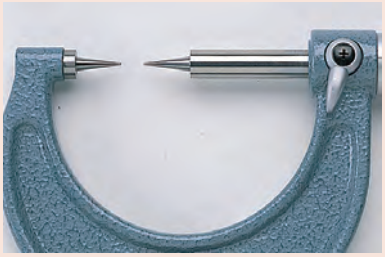

Type angle : 15°

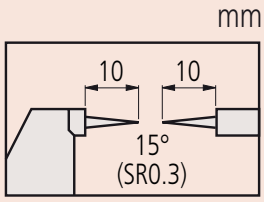

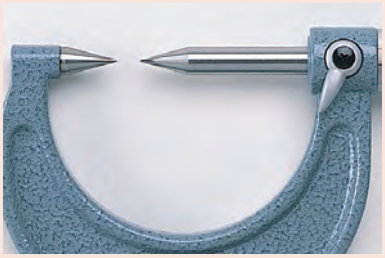

Type angle : 30°

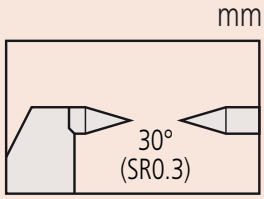

All products to be sold to commercial customers. Product illustrations are without obligation. Product descriptions, in particular any and all technical specifications, are only binding when explicitly agreed upon. For suggested retail prices, please refer to the separate price list.

Crimp Height Micrometer

Series 342/ Series 112

This Crimp Height Micrometer features a flat anvil and pointed spindle, allowing you to measure the crimped height of electrical contacts.

Dust- and Waterproof IP65

342-271

342-451

342-451

Functions	Series 342/ Series 112 342-271-30	342-451
ORIGIN	●	●
ZERO/ABS	●	
ON/OFF		●
Auto Power OFF after 20 min. non use	●	
Low voltage alarm	●	●
Function lock	●	
Data output	●	●
HOLD	●	●

Specifications

Accuracy	Refer to the list of specifications
Digital step	0,001 mm
Graduation	0,01 mm
Measuring force	3-8 4-6 (342-451) N
Scale	Thimble and sleeve satin chrome finish, ø 18 mm (342-271-30, 112-401)
Measuring surfaces	Hardened and precision ground
Measuring spindle	With spindle lock (342-271-30112-401), ø6,35 mm, spindle pitch 0,5 mm ø 6,35 mm, spindle pitch 10 mm (342-451)
Battery life	approx. 2,4 years (342-271-30), 3 years (342-451)
Delivered	Including box, 1 battery

Optional accessories

No.	Description
937387	Digimatic Cable, Round 6-Pin Type, 1 m
965013	Digimatic Cable, Round 6 -Pin Type, 2m
02AZD790E	U-WAVE T Connection Cable E, Round 6-Pin Type
06ADV380E	USB Input Tool Direct (Digimatic USB) cable, 2m, Round 6-Pin Type
05CZA662	Digimatic Cable with Data Button IP Type, 1m, Micrometer Type
05CZA663	Digimatic Cable with Data Button IP Type, 2m, Micrometer Type
02AZD790B	U-WAVE T Connection Cable B, with Data Button IP Micrometer Type
06ADV380B	USB Input Tool Direct (Digimatic USB), with Data Button IP Micrometer Type

937387/965013/06ADV380E/02AZD790E: for 342-451

Consumable spares

No.	Description
938882	Battery SR44 1.5V

342-271-30

342-451

112-401

Metric — Analog model

No.	Range [mm]	Accuracy [µm]	Mass [g]
112-401	0-25	±3	165

Metric — Digital model

No.	Range [mm]	Accuracy [µm]	Mass [g]
342-271-30	0-20	±3	270

Metric — QuickMike type

No.	Range [mm]	Accuracy [µm]	Mass [g]
342-451	0-15	±3	275

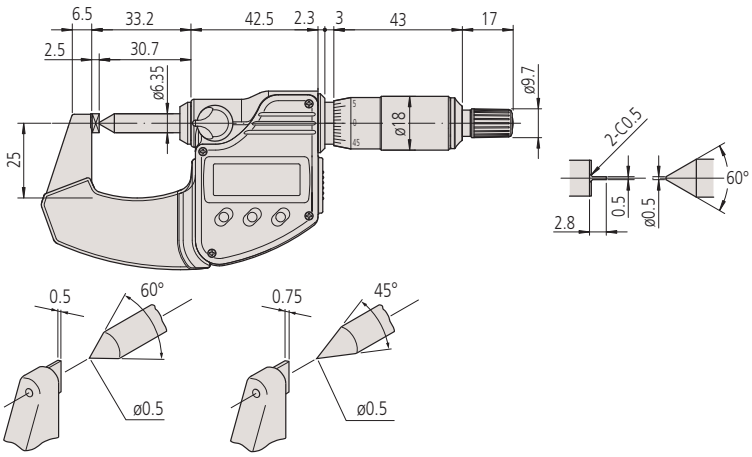

342-271-30
112-401

342-451

All products to be sold to commercial customers. Product illustrations are without obligation. Product descriptions, in particular any and all technical specifications, are only binding when explicitly agreed upon. For suggested retail prices, please refer to the separate price list.

Digimatic Blade Micrometer

Series 422

This Digimatic Blade Micrometer is designed to help you measure hard-to-reach features.
It offers the following benefits:
- Blade-shaped anvil and spindle for measuring the groove diameter of shafts, keyways, and other hard-to reach features.
- Non-rotating spindle.

422-230-30

Metric

No.	Range [mm]	Anvil/ Tip	Accuracy [µm]	L [mm]	a [mm]	b [mm]	c [mm]	Mass [g]
422-230-30	0-25	Type A	±3	65,6	12,5	11	31	365
422-260-30	0-25	Type B	±3	65,6	12,5	11	31	365
422-270-30	0-25	Type C	±3	65,6	12,5	11	31	365
422-271-30	0-25	Type D	±3	65,6	12,5	11	31	365
422-231-30	25-50	Type A	±3	90,7	12,6	12,2	50	565
422-261-30	25-50	Type B	±3	90,7	12,6	12,2	50	565
422-232-30	50-75	Type A	±3	105,3	13,5	14,1	57	465
422-233-30	75-100	Type A	±4	132,8	16	16,7	76	580

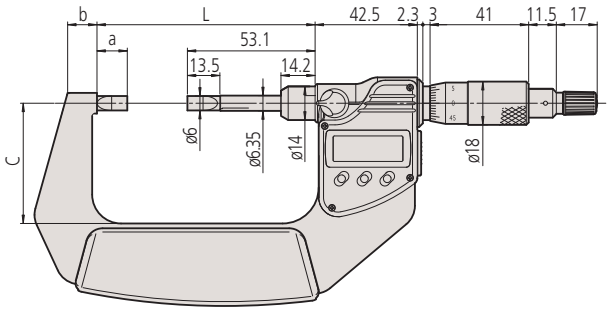

0-50 mm

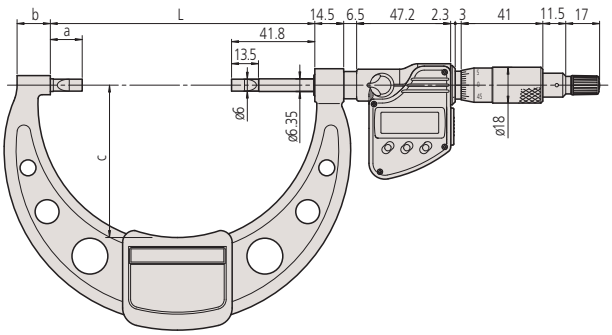

50-100 mm

Functions	Series 422
ORIGIN	●
ZERO/ABS	●
Auto Power OFF after 20 min. non use	●
Low voltage alarm	●
Function lock	●
Data output	●
HOLD	●

Specifications

Accuracy	Refer to the list of specifications (excluding quantizing error)
Measuring force	3-8 N
Digital step	0,001 mm
Scale	Thimble and sleeve satin chrome finish, ø18 mm
Parallelism	3 µm for models up to 75 mm 4 µm for models over 75 mm
Measuring spindle	With spindle lock, ø 6,35 mm, spindle pitch 0,5 mm
Battery life	approx. 2,4 years
Delivered	Including box, setting standard (from 25 mm upward), key, 1 battery

Optional accessories

No.	Description
05CZA662	Digimatic Cable with Data Button IP Type, 1m, Micrometer Type
05CZA663	Digimatic Cable with Data Button IP Type, 2m, Micrometer Type
02AZD790B	U-WAVE T Connection Cable B, with Data Button IP Micrometer Type
06ADV380B	USB Input Tool Direct (Digimatic USB), with Data Button IP Micrometer Type

Consumable spares

No.	Description
938882	Battery SR44 1.5V

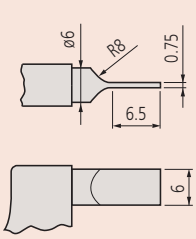

Type A (hardened steel)

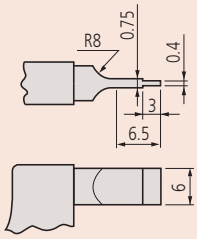

Type B (hardened steel)

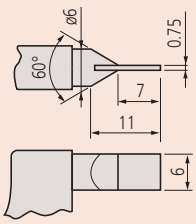

Type C (carbide-tipped)

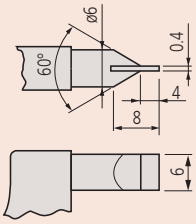

Type D (carbide-tipped)

All products to be sold to commercial customers. Product illustrations are without obligation. Product descriptions, in particular any and all technical specifications, are only binding when explicitly agreed upon. For suggested retail prices, please refer to the separate price list.

ABSOLUTE Digimatic Blade Micrometer QuickMike

Functions	Series 422
ORIGIN	●
ZERO/ABS	●
ON/OFF	●
Low voltage alarm	●
Data output	●
HOLD	●

Specifications

Accuracy	Refer to the list of specifications (excluding quantizing error)
Scale	Thimble, ø 24,9 mm
Digital step	0,001 mm
Parallelism	3 µm
Measuring spindle	ø6,35 mm, spindle pitch 10 mm
Battery life	approx. 1 year
Delivered	Including box, setting standard (from 25 mm upward), 1 battery

Optional accessories

No.	Description
937387	Digimatic Cable, Round 6-Pin Type, 1 m
965013	Digimatic Cable, Round 6 -Pin Type, 2m
02AZD790E	U-WAVE T Connection Cable E, Round 6-Pin Type
06ADV380E	USB Input Tool Direct (Digimatic USB) cable, 2m, Round 6-Pin Type

Consumable spares

No.	Description
938882	Battery SR44 1.5V

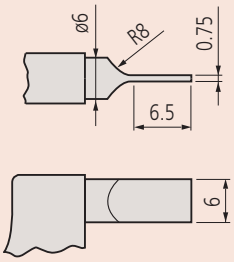

Series 422

ABSOLUTE IP54

This ABSOLUTE Digimatic Blade Micrometer QuickMike is designed to help you measure hard-to-reach features.
It offers the following benefits:

- Blade-shaped anvil and spindle for measuring the groove diameter of shafts, keyways, and other hard-to reach features.
- Non-rotating spindle.
- Fast spindle feed of 10mm/rev.

422-411

Metric

No.	Range [mm]	Accuracy [µm]	L [mm]	a [mm]	b [mm]	c [mm]	Mass [g]
422-411	0-30	±3	59,8	13,5	8,5	36	350
422-412	25-55	±3	84,8	13,5	10,3	47	490

Also available! Inch/Metric Models

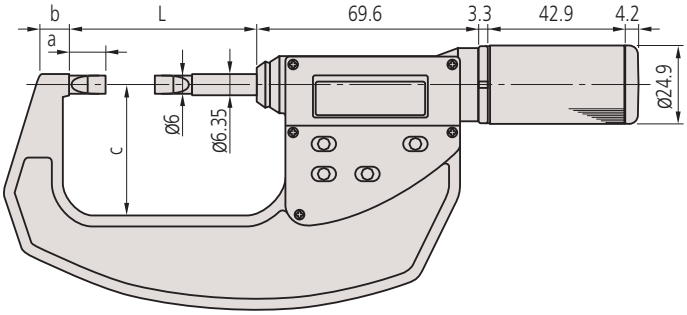

All products to be sold to commercial customers. Product illustrations are without obligation. Product descriptions, in particular any and all technical specifications, are only binding when explicitly agreed upon. For suggested retail prices, please refer to the separate price list.

Mitutoyo

Blade Micrometer

Series 122

This Blade Micrometer is designed to help you measure hard-to-reach features.
It offers the following benefits:
- Blade-shaped anvil and spindle for measuring the groove diameter of shafts, keyways, and other hard-to reach features.
- Non-rotating spindle.

122-101

Metric

No.	Range [mm]	Anvil/ Tip	Accuracy [µm]	L [mm]	a [mm]	b [mm]	c [mm]	Mass [g]
122-101	0-25	A	±3	55,3	15	8	30	260
122-111	0-25	B	±3	55,3	15	8	30	260
122-161	0-25	C	±3	55,3	15	8	30	275
122-141	0-25	D	±3	55,3	15	8	30	275
122-102	25-50	A	±3	80,3	15	12	49	300
122-112	25-50	B	±3	80,3	15	12	49	300
122-162	25-50	C	±3	80,3	15	12	49	315
122-142	25-50	D	±3	80,3	15	12	49	315
122-103	50-75	A	±3	105,3	15	13	60	360
122-104	75-100	A	±4	132,8	17,5	17	79	525
122-105	100-125	A	±4	158,2	17,9	19	94	670
122-106	125-150	A	±4	183,6	18,3	20	106	775
122-107	150-175	A	±5	208,8	18,5	19	118	950
122-108	175-200	A	±5	234,2	18,9	19	118	1140
122-109	200-225	A	±5	258	17,7	18	143	1300
122-110	225-250	A	±6	284	18,7	18	156	1450
122-115	250-275	A	±6	309	18,7	18	169	1600
122-116	275-300	A	±6	334	18,7	18	181	2020

Also available! Inch Models

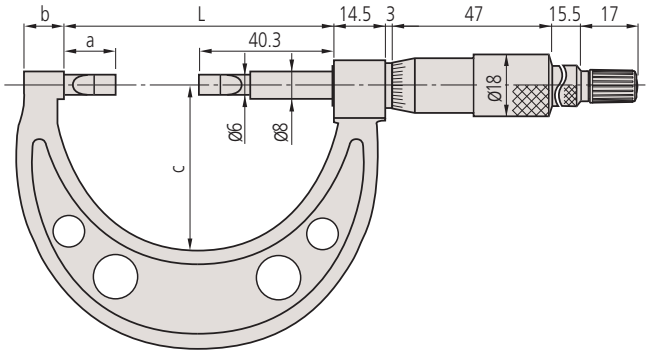

Specifications

Accuracy	Refer to the list of specifications
Measuring force	3-10 N
Graduation	0,01 mm
Scale	Thimble and sleeve satin chrome finish, ø18 mm
Parallelism	3 µm for models up to 75 mm (3+L/100) µm for models over 75 mm, L= max. range (mm)
Measuring spindle	ø 8 mm, spindle pitch 0,5 mm
Delivered	Including box, setting standard (from 25 mm upward), key

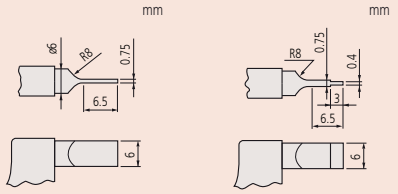

Type A (hardened steel) **Type B (hardened steel)**

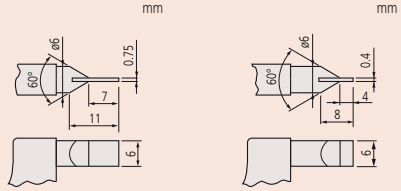

Type C (carbide-tipped) **Type D (carbide-tipped)**

All products to be sold to commercial customers. Product illustrations are without obligation. Product descriptions, in particular any and all technical specifications, are only binding when explicitly agreed upon. For suggested retail prices, please refer to the separate price list.

Digimatic V-Anvil Micrometer

Functions	Series 314
ZERO/ABS	●
Auto Power OFF after 20 min. non use	●
2 x PRESET	●
Low voltage alarm	●
Function lock	●
Data output	●
HOLD	●

Specifications

Accuracy	Refer to the list of specifications (excluding quantizing error)
Digital step	0,001 mm
Scale	Thimble and sleeve satin chrome finish, ø 18 mm
Flatness	0,3 µm (spindle) 1 µm (anvil)
Measuring surfaces	Prism angle 60°
Measuring spindle	With spindle lock; ø 6,35 mm, spindle pitch 0,75 mm
Battery life	approx. 2,4. years
Measuring force	5-10 N / 3-8 N (1-15 mm)
Delivered	Including box, setting standard, key, 1 battery

Optional accessories

No.	Description
05CZA662	Digimatic Cable with Data Button IP Type, 1m, Micrometer Type
05CZA663	Digimatic Cable with Data Button IP Type, 2m, Micrometer Type
02AZD790B	U-WAVE T Connection Cable B, with Data Button IP Micrometer Type
06ADV380B	USB Input Tool Direct (Digimatic USB), with Data Button IP Micrometer Type

Consumable spares

No.	Description
938882	Battery SR44 1.5V

Series 314

This Digimatic V-Anvil Micrometer helps you measure cutting tools and taps.
It offers the following benefits:

- It measures the outside diameter of cutting tools (such as taps, reamers, end mills) which have three or five flutes.
- V-anvils with a centreline groove are available for measuring the pitch diameter of taps by the single-wire method.

314-251-30

Metric

No.	Range [mm]	Remarks	Accuracy [µm]	Setting standard	Mass [g]
314-251-30	1-15	with groove	±4	167-327 ø 5 mm	275
314-261-30	1-15	-	±4	167-327 ø 5 mm	275
314-252-30	10-25	with groove	±4	167-328 ø 10 mm	410
314-262-30	10-25	-	±4	167-328 ø 10 mm	410
314-253-30	25-40	-	±5	167-329 ø 25 mm	465

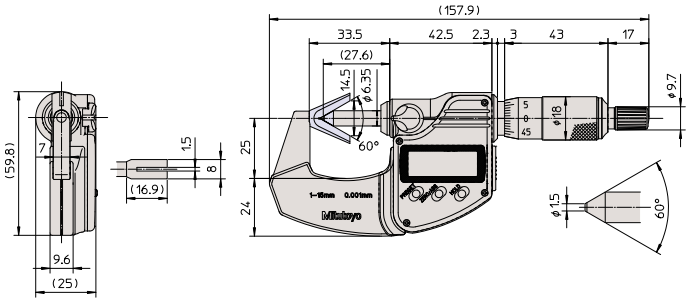

1 - 15 mm

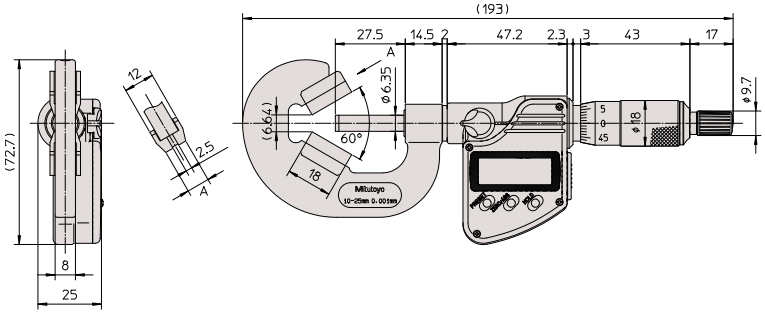

10 - 25 mm

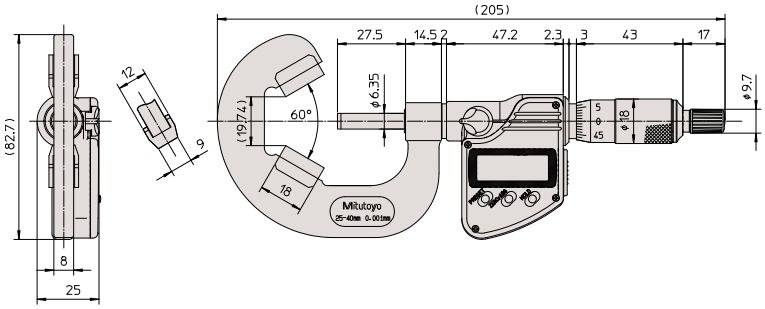

25 - 40 mm

All products to be sold to commercial customers. Product illustrations are without obligation. Product descriptions, in particular any and all technical specifications, are only binding when explicitly agreed upon. For suggested retail prices, please refer to the separate price list.

V-Anvil Micrometer

Series 114

This V-Anvil Micrometer helps you measure cutting tools and taps.
It offers the following benefits:
- It measures the outside diameter of cutting tools (such as taps, reamers, end mills) which have three or five flutes.
- V-anvils with a centreline groove are available for measuring the pitch diameter of taps by the single-wire method.

114-102

114-121

Metric

For 3-flute cutting tools (60°)

No.	Range [mm]	Remarks	Accuracy [µm]	Setting standard	a [mm]	Mass [g]
114-101	1-15	with groove	±4	167-327 ø 5 mm	0,5	120
114-161	1-15	-	±4	167-327 ø 5 mm	0,5	120
114-204	2,3-25	-	±4	167-327 ø 5 mm	0,5	290
114-102	10-25	with groove	±4	167-328 ø 10 mm	6,2	280
114-162	10-25	-	±4	167-328 ø 10 mm	6,2	280
114-103	25-40	-	±5	167-329 ø 25 mm	19,14	400
114-104	40-55	-	±6	167-330 ø 40 mm	32,13	465
114-105	55-70	-	±6	167-331 ø 55 mm	45,12	675
114-106	70-85	-	±7	167-332 ø 70 mm	58,11	910
114-107	85-100	-	±7	167-333 ø 85 mm	71,1	1160
114-108	100-115	-	±8	167-334 ø 100 mm	84,1	1480
114-109	115-130	-	±8	167-335 ø 115 mm	97,09	2080
114-110	130-145	-	±9	167-336 ø 130 mm	110,1	2880

114-204, 114-137: carbide-tipped anvil and spindle
others: carbide tipped spindle

Metric

For 5-flute cutting tools (108°)

No.	Range [mm]	Remarks	Accuracy [µm]	Setting standard	Mass [g]
114-121	5-25	with groove	±4	167-327 ø 5 mm	255
114-165	5-25	-	±4	167-327 ø 5 mm	255
114-137	2,3-25	-	±4	167-327 ø 5 mm	220
114-122	25-45	-	±5	167-329 ø 25 mm	400
114-123	45-65	-	±6	167-331 ø 55 mm	540
114-124	65-85	-	±7	167-332 ø 70 mm	760

114-204, 114-137: carbide-tipped anvil and spindle
others: carbide tipped spindle

Also available! Inch Models

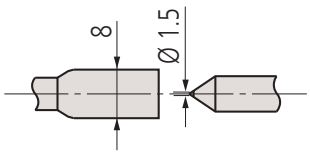

Plain anvil model

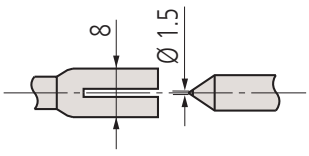

Grooved anvil model

Specifications

Accuracy	Refer to the list of specifications
Measuring force	5-10 N
Graduation	0,01 mm
Scale	Thimble and sleeve satin chrome finish, ø18 mm
Flatness	0,6 µm (spindle) 1,3 µm (anvil)
Measuring surfaces	Prism angle 60°/108°
Measuring spindle	With spindle lock, ø6,35 mm, spindle pitch 0,75 mm
Delivered	Including box, setting standard, key

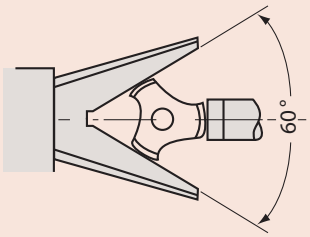

For 3-flute cutting tools

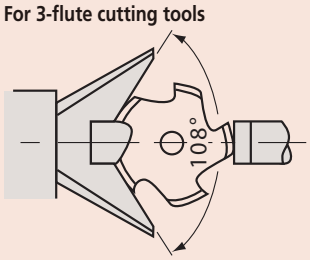

For 5-flute cutting tools

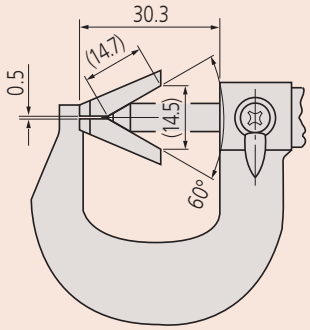

114-101, 114-161

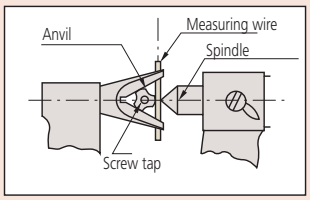

For 114-101, 114-102, 114-121

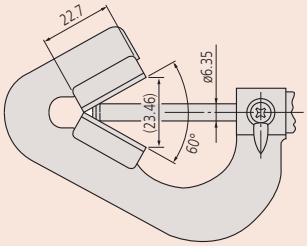

114-204

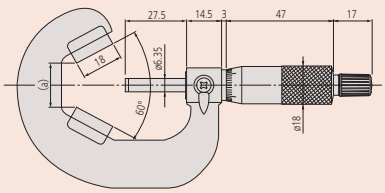

114-102 to 114-110

All products to be sold to commercial customers. Product illustrations are without obligation. Product descriptions, in particular any and all technical specifications, are only binding when explicitly agreed upon. For suggested retail prices, please refer to the separate price list.

Can Seam Micrometer

Series 147

This Can Seam Micrometer allows you to measure different types of can seams.
It offers the following benefits:
- Designed to measure the width, height and depth of can seams.
- Three types are available, for steel, aluminium and spray cans.

Specifications

Accuracy	3 µm
Graduation	0,01mm
Scale	Thimble and sleeve satin chrome finish, ø13 mm
Delivered	Including box, key

Metric

No.	Range [mm]	Remarks	Mass [g]
147-103	0-13	For steel cans	65
147-105	0-13	For aluminium cans	65
147-202	0-13	For spray cans	65

Also available! Inch Models

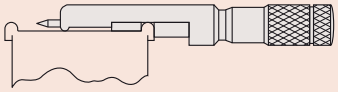

147-103
For steel cans

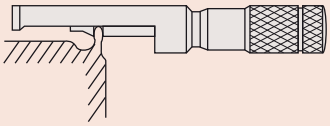

147-105
For aluminium cans

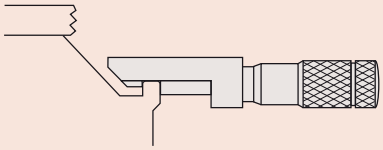

147-202
For spray cans

147-103

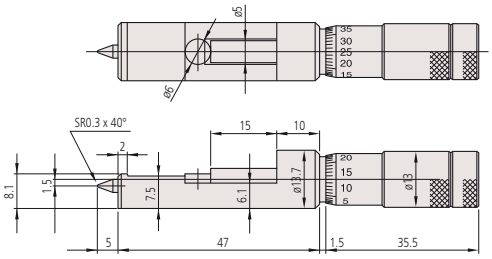

147-103

147-105

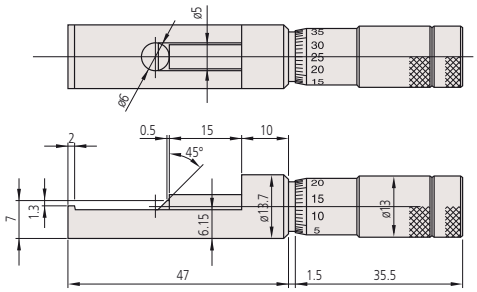

147-105

147-202

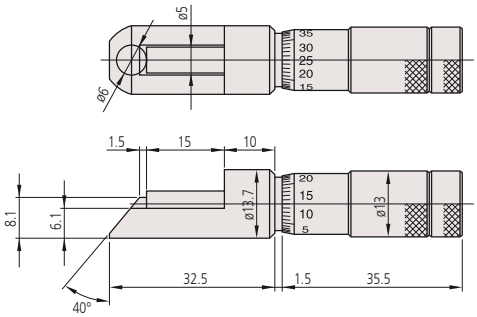

147-202

All products to be sold to commercial customers. Product illustrations are without obligation. Product descriptions, in particular any and all technical specifications, are only binding when explicitly agreed upon. For suggested retail prices, please refer to the separate price list.

Mitutoyo

Wire Micrometer

Series 147

This Wire Micrometer takes easy, accurate measurements and offers the following benefits:
- Designed for measuring wire thickness.
- You can also use it to measure the diameter of small balls.

147-401

Metric

No.	Range [mm]	Accuracy [µm]	Mass [g]
147-401	0-10	±3	65

Also available! Inch Models

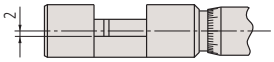

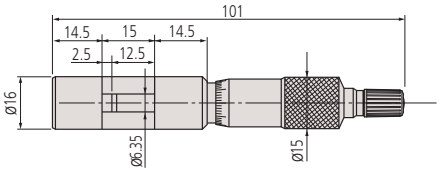

Specifications

Accuracy	Refer to the list of specifications
Measuring force	5-10 N
Graduation	0,01 mm
Scale	Thimble and sleeve satin chrome finish, ø15 mm
Flatness	0,6 µm
Parallelism	1,3 µm
Measuring surfaces	Carbide tipped, micro-lap finish
Measuring spindle	ø 6,35 mm, spindle pitch 0,5 mm
Delivered	Including box, key

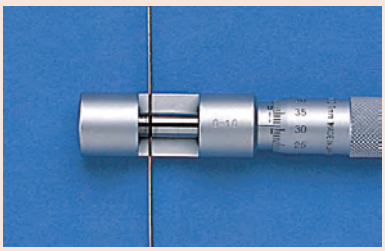

Hub Micrometer

Series 147

This Hub Micrometer is designed with a very small throat depth, allowing you to measure hub thickness, shouldered features inside a bore and bearing bushings.

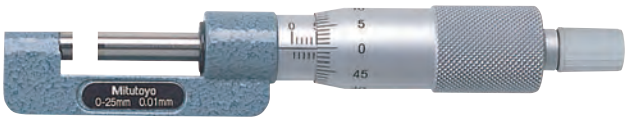

147-301

Metric

No.	Range [mm]	Accuracy [µm]	L [mm]	A [mm]	B [mm]	C [mm]	H [mm]	Mass [g]
147-301	0-25	±2	0	6	8,5	13,5	17,5	135
147-302	25-50	±2	25	6,5	11	14	20,5	150
147-303	50-75	±2	50	6,5	11	13	20,5	170
147-304	75-100	±3	75	6,5	11	13	20,5	185

Also available! Inch Models

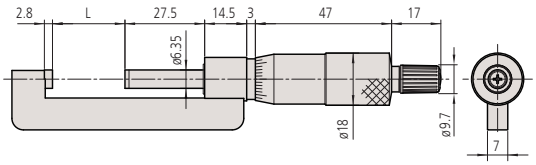

Specifications

Accuracy	Refer to the list of specifications
Measuring force	5-10 N
Graduation	0,01 mm
Scale	Thimble and sleeve satin chrome finish, ø18 mm
Flatness	0,6 µm
Parallelism	(2+L/100) µm L=max. range (mm)
Measuring surfaces	carbide-tipped, micro-lap finish
Measuring spindle	ø6,35 mm, spindle pitch 0,5 mm
Delivered	Including box, setting standard (from 25 mm upward), key

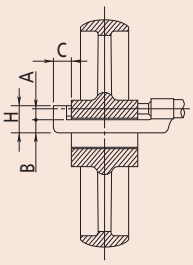

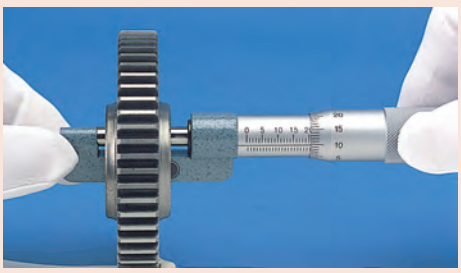

All products to be sold to commercial customers. Product illustrations are without obligation. Product descriptions, in particular any and all technical specifications, are only binding when explicitly agreed upon. For suggested retail prices, please refer to the separate price list.

Digimatic Micrometer Interchangeable Anvil Type

Functions	Series 317
ORIGIN	●
ZERO/ABS	●
Auto Power OFF after 20 min. non use	●
Low voltage alarm	●
Function lock	●
Data output	●
HOLD	●

Specifications

Accuracy	Refer to the list of specifications (excluding quantizing error)
Measuring force	5-10 N
Digital step	0,001 mm
Scale	Thimble and sleeve satin chrome finish, ø18 mm
Flatness	0,6 µm (spindle) 2 µm (anvil)
Parallelism	3 µm
Measuring surfaces	Carbide tipped (spindle)
Measuring spindle	With spindle lock, ø6,35 mm, spindle pitch 0,5 mm
Battery life	approx. 2,4 years
Delivered	Including box, setting standard (from 25 mm upward), key, 1 battery, anvils

Optional accessories

No.	Description
05CZA662	Digimatic Cable with Data Button IP Type, 1m, Micrometer Type
05CZA663	Digimatic Cable with Data Button IP Type, 2m, Micrometer Type
02AZD790B	U-WAVE T Connection Cable B, with Data Button IP Micrometer Type
06ADV380B	USB Input Tool Direct (Digimatic USB), with Data Button IP Micrometer Type
950758	Round Base for Series 117, for 0-25mm
201218	V-Anvil

Consumable spares

No.	Description
938882	Battery SR44 1.5V
201217	Cylindrical Anvil 3mm
201379	Cylindrical Anvil 5mm
201216	Flat Anvil

950758 with micrometer

Series 317

Dust- and Waterproof IP65

This Digimatic Micrometer Interchangeable Anvil Type lets you measure a range of different features.
It offers the following benefits:

- It is designed to accept interchangeable anvils shaped for specific tasks.
- You can use it to measure the wall thickness of tubes, as well as openings and slots from edge to edge, and features in hard-to-reach locations.

317-251-30

Metric

No.	Range [mm]	Graduation	Accuracy [µm]	Anvils included	Mass [g]
317-251-30	0-25	0,01mm	±4	201217, 201216	335
317-252-30	25-50	0,01mm	±4	201379, 201216	360

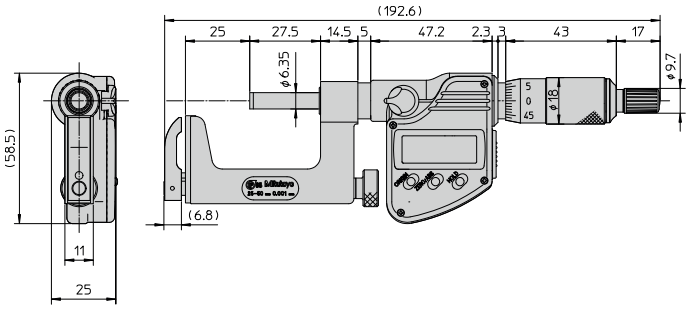

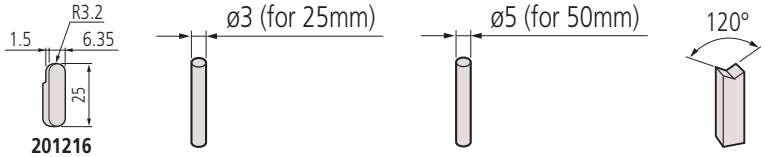

201216 Flat anvil

201217 Cylindrical anvil

201379 Cylindrical anvil

201218 V-anvil

All products to be sold to commercial customers. Product illustrations are without obligation. Product descriptions, in particular any and all technical specifications, are only binding when explicitly agreed upon. For suggested retail prices, please refer to the separate price list.

Micrometer Interchangeable Anvil Type

Series 117

This Micrometer Interchangeable Anvil Type lets you measure a range of different features.
It offers the following benefits:
- It is designed to accept interchangeable anvils shaped for specific tasks.
- You can use it to measure the wall thickness of tubes, as well as openings and slots from edge to edge, and features in hard-to-reach locations.

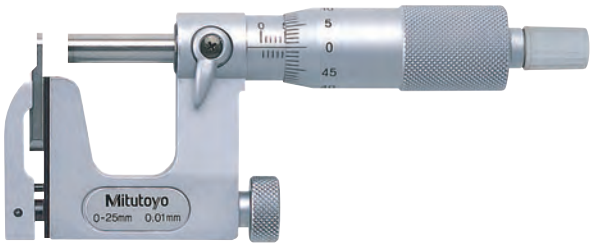

117-101

Metric

No.	Range [mm]	Accuracy [µm]	Anvils included	Mass [g]
117-101	0-25	±4	201217, 201216	255
117-102	25-50	±4	201379, 201216	320

Also available! Inch Models

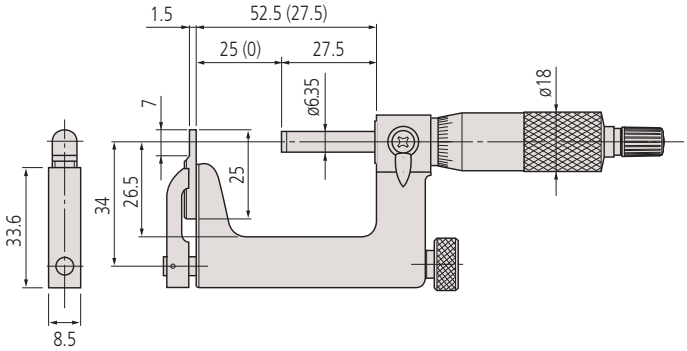

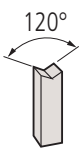

201218
V-anvil

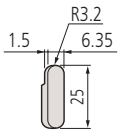

201216
Flat anvil

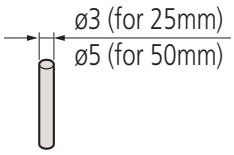

201217
Cylindrical anvil

Specifications

Accuracy	Refer to the list of specifications
Measuring force	5-10 N
Graduation	0,01 mm
Scale	Thimble and sleeve satin chrome finish, ø 18 mm
Flatness	0,6 µm (spindle) 2 µm (anvil)
Parallelism	3 µm
Measuring surfaces	Carbide tipped (spindle)
Measuring spindle	With spindle lock, Ø 6,35 mm, spindle pitch 0,5 mm
Delivered	Including box, setting standard (from 25 mm upward), key, anvils

Optional accessories

No.	Description
201218	V-Anvil
950758	Round Base for Series 117, for 0-25mm

Consumable spares

No.	Description
201217	Cylindrical Anvil 3mm
201379	Cylindrical Anvil 5mm
201216	Flat Anvil

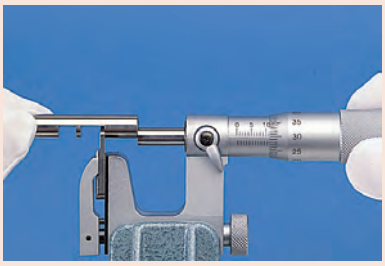

950758 with micrometer

All products to be sold to commercial customers. Product illustrations are without obligation. Product descriptions, in particular any and all technical specifications, are only binding when explicitly agreed upon. For suggested retail prices, please refer to the separate price list.

Limit Micrometer

Series 113

This Limit Micrometer offers the following benefits:
- Spindle and Anvil with chamfered edge.
- You can use it as a GO/±NG gauge by setting the upper and lower limits of dimension.

113-102

Specifications

Accuracy	Refer to the list of specifications
Measuring force	5-10 N
Graduation	0,01 mm
Scale	Thimble and sleeve satin chrome finish, ø18 mm
Flatness	0,6 µm
Parallelism	(3+L/100) µm, L = max. range (mm)
Measuring surfaces	Carbide tipped with chamfer micro-lap finish
Measuring spindle	With spindle lock, Ø 6,35 mm, spindle pitch 0,5 mm
Delivered	Including box, setting standard (from 25 mm upward), key

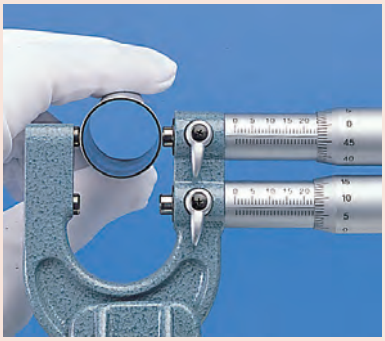

Metric

No.	Range [mm]	Accuracy [µm]	L [mm]	a [mm]	c [mm]	Mass [g]
113-102	0-25	±3	29,3	15	23	340
113-103	25-50	±3	54,3	15	37	380

mm

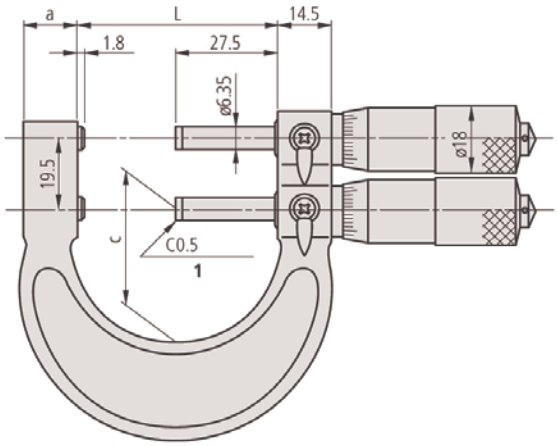

All products to be sold to commercial customers. Product illustrations are without obligation. Product descriptions, in particular any and all technical specifications, are only binding when explicitly agreed upon. For suggested retail prices, please refer to the separate price list.

Indicating Micrometer

Series 510

This is a Micrometer screw with a dial comparator that enables you to take fast and highly accurate measurements.
It offers the following benefits:

- A self-setting micrometer gauge lets you take rapid measurement of workpieces, especially cylindrical shapes, in batch or mass production situations.
- In the 25mm measuring range, the model line-up offers a choice of having the anvil retraction button positioned on the left or the right.
- Large dial comparator for easy reading (+/- 0,06mm).
- Tolerance markers for GO/NG measurements.
- 8mm spindle diameter gives you easy positioning and highly accurate measurements.

510-121

Metric

No.	Range [mm]	Anvil retracting stroke	Indicating range	Operating button	L [mm]	D [mm]	Mass [g]
510-121	0-25	2 mm	±0,06 mm	Right	31,5	25	520
510-141	0-25	2 mm	±0,06 mm	Left	31,5	25	520
510-122	25-50	2 mm	±0,06 mm	Left	56,5	38	670
510-123	50-75	2 mm	±0,06 mm	Left	81,5	50	820
510-124	75-100	2 mm	±0,06 mm	Left	106,5	63	970

Also available! Inch Models

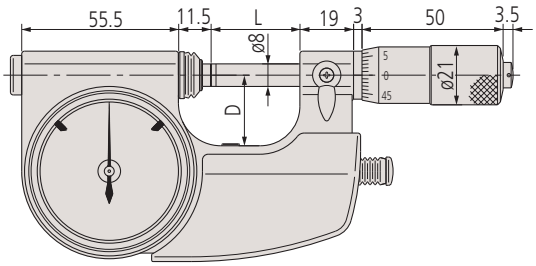

0-25 mm

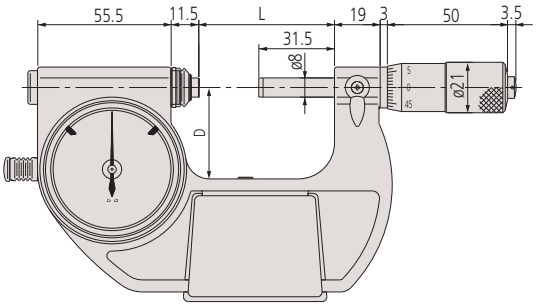

25-100 mm

Specifications

Measuring force	5-10 N
Graduation	0,001 mm
Graduation dial comparator	0,001 mm
Accuracy micrometer	2 µm
Accuracy dial comparator	1 µm
Scale	Thimble and sleeve satin chrome finish, ø 21 mm
Flatness	0,3 µm
Parallelism	0,6 µm for models up to 50 mm 1 µm for models over 50 mm
Measuring surfaces	carbide-tipped, micro-lap finish, ø 8 mm
Delivered	Including box, key

Optional accessories

No.	Description
04AZA124	Workpiece Stopper Indicating Micrometer, 23mm
04AZA125	Workpiece Stopper Indicating Micrometer, 20,5mm
04AZA126	Workpiece Stopper Indicating Micrometer, 15mm

		Diameter range of workpiece supported		
Measuring range mm	**Nr.**	A Ø mm	B Ø mm	C Ø mm
0– 25	**510-121**	–	4–16	15– 25
25– 50	**510-122**	25–37	30–42	41– 50
50– 75	**510-123**	50–61	54–66	65– 75
75–100	**510-124**	75–87	80–92	91–100

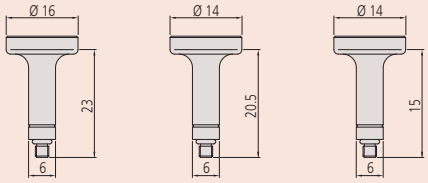

04AZA124 Workpiece stop A **04AZA125 Workpiece stop B** **04AZA126 Workpiece stop C**

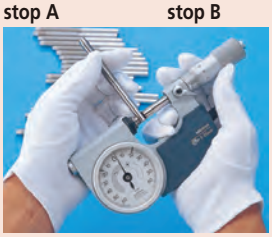

Adjusting screw for dial comparator ± 5 µm

All products to be sold to commercial customers. Product illustrations are without obligation. Product descriptions, in particular any and all technical specifications, are only binding when explicitly agreed upon. For suggested retail prices, please refer to the separate price list.

Indicating Snap Gauge

Series 523

This Snap Gauge designed to mount an indicator to suit the measurement application, and offers the following benefits:

- It's ideal for rapidly inspecting workpieces, especially cylindrical, in batch or mass production situations, when you need an indication of where a measurement falls within the tolerance band.
- You can set it with external length standards such as block gauges.
- Easy-to-operate retracting button.

Specifications

Measuring force	5-10 N
Graduation dial comparator	0,001 mm
Accuracy dial comparator	1 µm
Flatness	0,3 µm
Parallelism	0,6 µm for models up to 50 mm 1 µm for models over 50 mm
Measuring surfaces	Carbide tipped, micro-lap finish ø 10,8 mm
Delivered	Including box, workpiece rest

523-121

Metric

No.	Range [mm]	Anvil retracting stroke	Indicating range	L [mm]	D [mm]	Mass [g]
523-121	0-25	2 mm	±0,06 mm	31	25	740
523-122	25-50	2 mm	±0,06 mm	56	35	840
523-123	50-75	2 mm	±0,06 mm	81	47,5	950
523-124	75-100	2 mm	±0,06 mm	106	60	1080

Also available! Inch Models

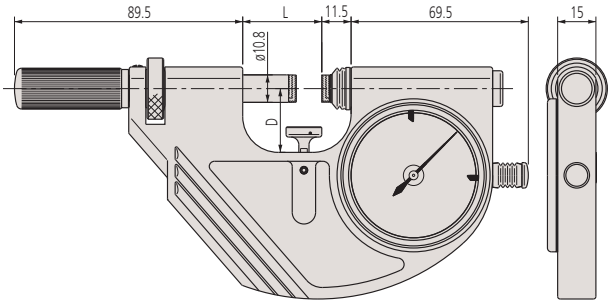

All products to be sold to commercial customers. Product illustrations are without obligation. Product descriptions, in particular any and all technical specifications, are only binding when explicitly agreed upon. For suggested retail prices, please refer to the separate price list.

Snap Gauge

Series 523

This Snap Gauge designed to mount an indicator to suit the measurement application, and offers the following benefits:

- It's ideal for rapidly inspecting workpieces, especially cylindrical, in batch or mass production situations, when you need an indication of where a measurement falls within the tolerance band.
- You can set it with external length standards such as block gauges.
- Easy-to-operate retracting button.

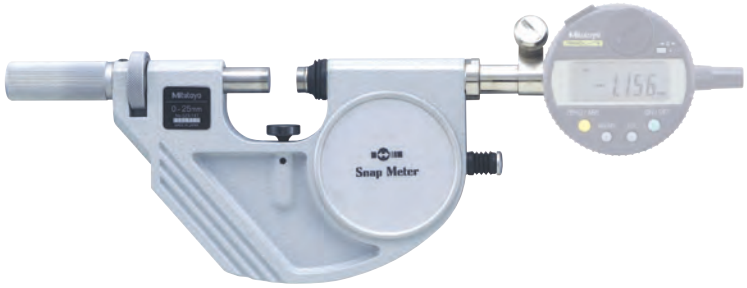

523-141with optional indicator

Metric

No.	Range [mm]	Anvil retracting stroke	Repeatability [µm]	L [mm]	D [mm]	Mass [g]
523-141	0-25	2 mm	0,4	31	25	710
523-142	25-50	2 mm	0,4	56	35	810
523-143	50-75	2 mm	0,4	81	47,5	920
523-144	75-100	2 mm	0,4	106	60	1050

Also available! Inch Models

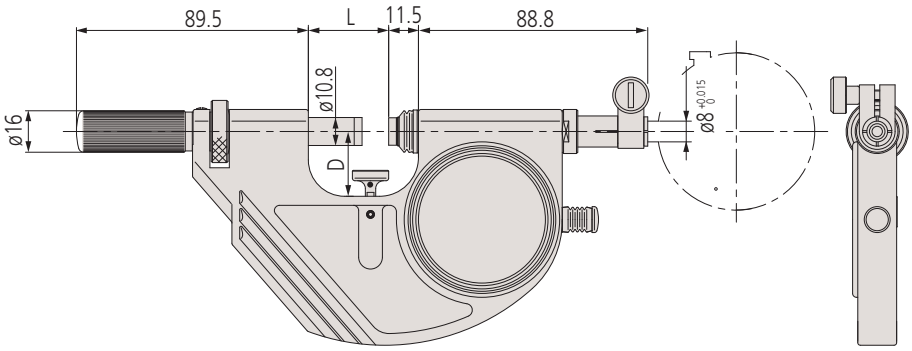

Sample application: with dial indicator

Sample application: with digital indicator

Sample application: with Linear Gauge

Specifications

Measuring force	5-10 N
Flatness	0,3 µm
Parallelism	0,6 µm for models up to 50 mm 1 µm for models over 50 mm
Measuring surfaces	carbide-tipped, micro-lap finish, Ø 10,8 mm
Optional accessories	See dial gauges section
Delivered	Including box, workpiece rest, without indicator

All products to be sold to commercial customers. Product illustrations are without obligation. Product descriptions, in particular any and all technical specifications, are only binding when explicitly agreed upon. For suggested retail prices, please refer to the separate price list.

Dial Gauge Micrometer

Series 107

This Dial Gauge Micrometer allows you to quickly measure mass-produced parts.
It offers the following benefits:

- Designed to mount a dial or a digital indicator for direct GO/NG judgement of mass-produced parts.
- You can take rapid measurements thanks to its anvil retracting trigger.
- 3mm anvil retracting stroke.

107-201 with optional dial indicator

Specifications

Accuracy	Refer to the list of specifications
Measuring force	5-10 N
Graduation	0,01 mm
Anvil retracting stroke	3 mm
Scale	Thimble and sleeve satin chrome finish, ø18 mm
Flatness	0,6 µm
Parallelism	(2+L/100) µm (mm) L = max. range
Measuring surfaces	carbide-tipped, micro-lap finish
Measuring spindle	With spindle lock, Ø 6,35 mm, spindle pitch 0,5 mm
Delivered	Including box, setting standard (from 25 mm upward), key

2900SB-10 (1µm)

543-390B (1µm)

542-181 (0,1 µm)

Optional
See dial indicators section

Metric

No.	Range [mm]	Accuracy [µm]	L [mm]	C [mm]	Mass [g]
107-201	0-25	±2	39,5	30	480
107-202	25-50	±2	64,5	38	520
107-203	50-75	±2	90	45	585
107-204	75-100	±3	115,6	65	630
107-205	100-125	±3	140,6	79	725
107-206	125-150	±3	165,6	93	810
107-207	150-175	±4	190,5	105	1050
107-208	175-200	±4	215,5	120	1170

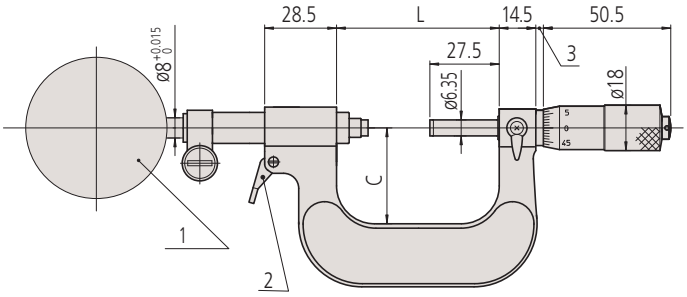

1: dial indicator - 2: retracting trigger (0 - 50 mm)

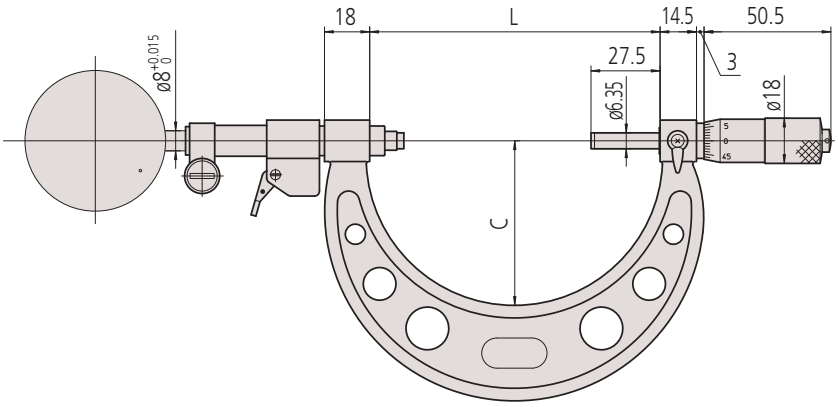

50 - 200 mm

All products to be sold to commercial customers. Product illustrations are without obligation. Product descriptions, in particular any and all technical specifications, are only binding when explicitly agreed upon. For suggested retail prices, please refer to the separate price list.

Dial Snap Gauges

Series 201

These Dial Snap Gauges are designed to let you quickly carry out GO/NG judgement of the diameters of cylinders and shafts in machining processes.
They offer the following benefits:
- Wide, flat carbide anvils.
- 2mm anvil retracting stroke.
- You can adjust the measuring range with an adjustment nut.

201-101 with optional accessories

Metric

No.	Range [mm]	A [mm]	B [mm]	Mass [g]
201-101	0-25	277	42	570
201-102	25-50	302	67	660
201-103	50-75	328	93	700
201-104	75-100	353	118	770
201-105	100-125	379	144	870
201-106	125-150	404	169	950
201-107	150-175	429	194	1070
201-108	175-200	455	220	1160
201-109	200-225	480	245	1260
201-110	225-250	506	271	1350
201-111	250-275	531	296	1470
201-112	275-300	556	321	1620

Also available! Inch Models

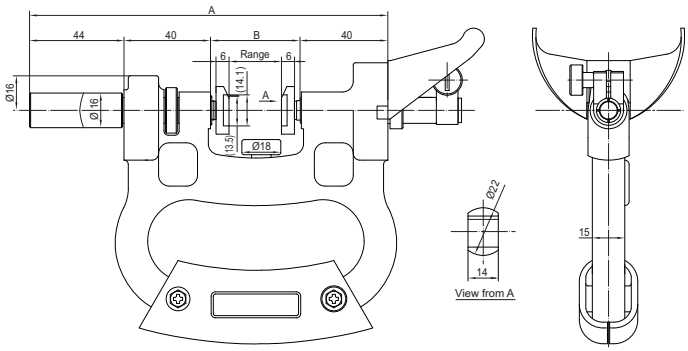

Specifications

Anvil retracting stroke	2 mm
Anvil positioning range	25 mm
Flatness	1 µm
Parallelism	5 µm
Measuring force	15 N ±3
Delivered	Including hand guard Adjustable workpiece stop Suitable for dial indicators with ø 8 mm stem (metric)

Optional accessories

No.	Description
2046SB	Dial Indicator, Flat Back, 10mm, 0,01mm
2109SB-10	Dial Indicator, Flat Back, 1mm, 0,001mm, Shockproof
21DZA000	Protector for Indicator (plastic cover)
2972TB	Dial Indicator, Flat Back, 1mm, 0,01mm, One Revolution, Shockproof

201-101 with with optional accessories
Stand 156-101-10
Dial indicator 2109SB-10

All products to be sold to commercial customers. Product illustrations are without obligation. Product descriptions, in particular any and all technical specifications, are only binding when explicitly agreed upon. For suggested retail prices, please refer to the separate price list.

Internal Groove Micrometer

Series 146

This Internal Groove Micrometer is designed to measure the width and location of grooves cut into bore walls.
It offers the following features:
- Two-directional ratchet stop.
- Non-rotating spindle models are also available.

Specifications

Accuracy	±10 µm
Graduation	0,01
Scale	Thimble and sleeve satin chrome finish, ø18 mm
Parallelism	10 µm
Measuring surfaces	hardened
Measuring spindle	Spindle pitch 0,5 mm
Ratchet	Can be used in both directions
Delivered	Including box, key

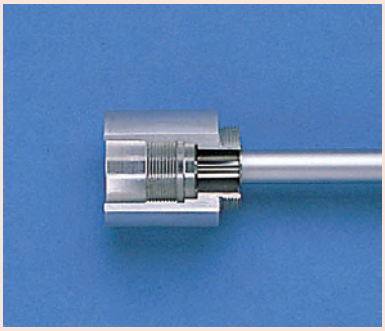

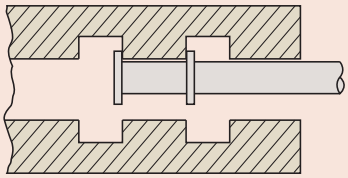

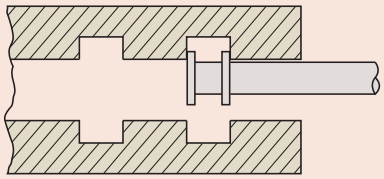

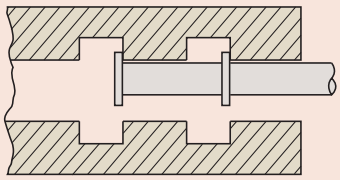

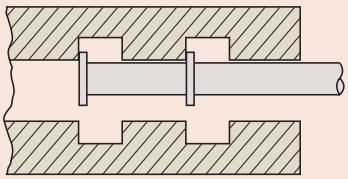

146-122

146-221

146-222

Metric — Non-rotating spindle type

No.	Range Outside	Range Inside	Diameter of measuring plate [mm]	l [mm]	L [mm]	Mass [g]
146-221	0-25 mm	1,6-26,5 mm	6,35			135
146-222	0-25 mm	1,6-26,5 mm	12,7	115	25	185
146-223	25-50 mm	26,5-51,5 mm	12,7	90	50	175
146-224	50-75 mm	51,5-76,5 mm	12,7	65	75	165
146-225	75-100 mm	76,5-101,5 mm	12,7	40	100	160

Metric — Rotating spindle type

No.	Range Outside	Range Inside	Diameter of measuring plate [mm]	l [mm]	L [mm]	Mass [g]
146-121	0-25 mm	1,6-26,5 mm	6,35			135
146-122	0-25 mm	1,6-26,5 mm	12,7	103,3	25	185
146-123	25-50 mm	26,5-51,5 mm	12,7	78,3	50	175
146-124	50-75 mm	51,5-76,5 mm	12,7	53,3	75	165
146-125	75-100 mm	76,5-101,5 mm	12,7	28,3	100	160

Also available! Inch Models

Unit: mm

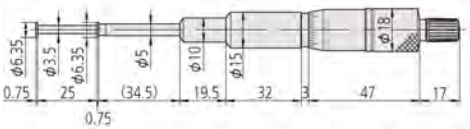

146-221

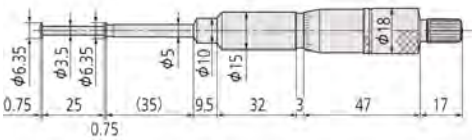

146-121

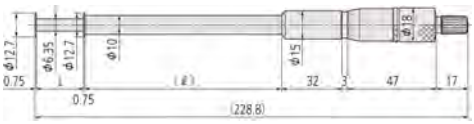

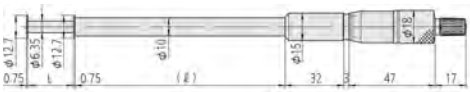

All products to be sold to commercial customers. Product illustrations are without obligation. Product descriptions, in particular any and all technical specifications, are only binding when explicitly agreed upon. For suggested retail prices, please refer to the separate price list.

Mitutoyo

Micrometer Setting Standards ≤ 1000 mm

Series 167

167-103

167-108

Specifications

Accuracy	Refer to the list of specifications (Tolerance on deviation of measured central length from nominal at 20°C.)
Flatness	0,3 µm
Parallelism	2 µm
Measuring surfaces	micro-lap finish

Metric

No.	Length [mm]	Accuracy [µm]	Diameter (D) [mm]
167-101	25	±1,5	6,35
167-102	50	±2	6,35
167-103	75	±2,5	6,35
167-104	100	±3	7,9
167-105	125	±3,5	7,9
167-106	150	±4	7,9
167-107	175	±4,5	7,9
167-108	200	±5	9,4
167-109	225	±5,5	9,4
167-110	250	±6	9,4
167-111	275	±6,5	9,4
167-112	300	±7	9,4
167-113	325	±7,5	9,4
167-114	350	±8	9,4
167-115	375	±8,5	9,4
167-116	400	±9	9,4
167-117	425	±9,5	9,4
167-118	450	±10	9,4
167-119	475	±10,5	9,4
167-120	500	±11	11,9
167-121	525	±11,5	11,9
167-122	550	±12	11,9
167-123	575	±12,5	11,9
167-124	600	±13	11,9
167-125	625	±13,5	11,9
167-126	650	±14	11,9
167-127	675	±14,5	11,9
167-128	700	±15	11,9
167-129	725	±15,5	11,9
167-130	750	±16	11,9
167-131	775	±16,5	11,9
167-132	800	±17	11,9
167-133	825	±17,5	11,9
167-134	850	±18	11,9
167-135	875	±18,5	11,9
167-136	900	±19	11,9
167-137	925	±19,5	11,9
167-138	950	±20	11,9
167-139	975	±20,5	11,9
167-140	1000	±21	11,9

Metric

Sets

No.	Length [mm]	Number of standards
167-902	25-125	5
167-903	25-275	11

25 mm - 75 mm

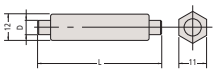

200 mm - 475 mm

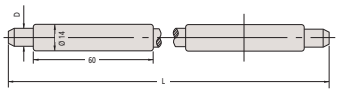

100 mm - 175 mm

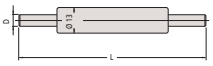

500 mm - 1000 mm

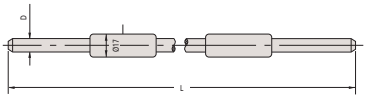

All products to be sold to commercial customers. Product illustrations are without obligation. Product descriptions, in particular any and all technical specifications, are only binding when explicitly agreed upon. For suggested retail prices, please refer to the separate price list.

Micrometer Setting Standards > 1000 mm

Specifications

Accuracy	±(1+L/50) µm
Flatness	0,3 µm
Parallelism	2 µm
Measuring surfaces	Micro-lap finish

Series 167

This Micrometer Setting Standards 1000mm lets you accurately set outside micrometers at either end of the measuring range.

Metric

No.	Length [mm]	Diameter (D) [mm]
167-365	1025	11,9
167-366	1050	11,9
167-367	1075	11,9
167-368	1100	11,9
167-369	1125	11,9
167-370	1150	11,9
167-371	1175	11,9
167-372	1200	11,9
167-373	1225	11,9
167-374	1250	11,9
167-375	1275	11,9
167-376	1300	11,9
167-377	1325	11,9
167-378	1350	11,9
167-379	1375	11,9
167-380	1400	11,9
167-381	1425	11,9
167-382	1450	11,9
167-383	1475	11,9
167-384	1500	11,9
167-385	1525	11,9
167-386	1550	11,9
167-387	1575	11,9
167-388	1600	11,9
167-389	1625	11,9
167-390	1650	11,9
167-391	1675	11,9
167-392	1700	11,9
167-393	1725	11,9
167-394	1750	11,9
167-395	1775	11,9
167-396	1800	11,9
167-397	1825	11,9
167-398	1850	11,9
167-399	1875	11,9
167-400	1900	11,9
167-401	1925	11,9
167-402	1950	11,9
167-403	1975	11,9
167-404	2000	11,9

All products to be sold to commercial customers. Product illustrations are without obligation. Product descriptions, in particular any and all technical specifications, are only binding when explicitly agreed upon. For suggested retail prices, please refer to the separate price list.

Mitutoyo

Setting Standards for Screw Thread Micrometers

Series 167

These Setting Standards are specially designed to allow you to accurately set Screw Thread Micrometers.

Metric — Angle 55°

No.	Length [mm]	Accuracy [µm]
167-272	25	±4
167-273	50	±5
167-274	75	±6
167-275	100	±7
167-276	125	±8
167-277	150	±9
167-278	175	±10
167-279	200	±11
167-280	225	±12
167-281	250	±13
167-282	275	±14

Metric — Angle 60°

No.	Length [mm]	Accuracy [µm]
167-261	25	±4
167-262	50	±5
167-263	75	±6
167-264	100	±7
167-265	125	±8
167-266	150	±9
167-267	175	±10
167-268	200	±11
167-269	225	±12
167-270	250	±13
167-271	275	±14

Also available! Inch Models

Specifications

Accuracy — Refer to the list of specifications

Setting Standards for V-Anvil Micrometers

Series 167

These Setting Standards are designed so you can accurately set V-Anvil Micrometers.

Metric

No.	Length [mm]	Accuracy [µm]
167-327	5	±2
167-328	10	±2
167-329	25	±2
167-330	40	±3
167-331	55	±3
167-332	70	±3
167-333	85	±3

Also available! Inch Models

Specifications

Accuracy — Refer to the list of specifications

167-329

All products to be sold to commercial customers. Product illustrations are without obligation. Product descriptions, in particular any and all technical specifications, are only binding when explicitly agreed upon. For suggested retail prices, please refer to the separate price list.

3-Wire Measuring Process

Series 313

This three-wire measuring process is one of the most precise procedures for determining the pitch diameter of threads. It offers you the following benefits:

- The measuring wires are hardened and precision-lapped.
- They are placed onto the spindle and anvil of an outside micrometer, allowing you to measure the pitch diameter of threads.

313-101

Specifications

Accuracy wires	DIN 2269, Grade 1
Tolerance wires	±1 µm
Contents	18 pairs of wires ø 0,17 mm up to ø 3200 mm
Delivered	Sets including wooden box

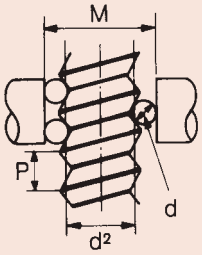

P =thread pitch
d_D =measuring wire Ø
d_2 =pitch diameter
M =theoretical dimension at measuring pressure d
a =pitch angle
d =correction factor

$$M = d_2 + \frac{d_D}{\sin\frac{a}{2}} - \frac{P}{2\tan\frac{a}{2}} + d_D + d$$

$$d = \frac{d_D}{2} \cdot \frac{P^2}{p^2} \cdot \frac{\cos\frac{a}{2} \cdot \cot\frac{a}{2}}{d_2^2}$$

ø Nominal	Thread pitch P	Pitch ø d2	Measuring wire ø dD	Measurement over wire M	(M-d2)
M 14	2,00	12,701	1,350	15,021	2,320
M 16	2,00	14,701	1,350	17,021	2,320
M 20	2,50	18,376	1,650	21,163	2,787
M 22	2,50	20,376	1,650	23,163	2,787
M 24	3,00	22,051	2,050	25,606	3,555
M 27	3,00	25,051	2,050	28,605	3,554
M 30	3,50	27,727	2,050	30,848	3,121
M 33	3,50	30,727	2,050	33,848	3,121
M 36	4,00	33,402	2,550	37,591	4,189
M 39	4,00	36,402	2,550	40,590	4,188
M 42	4,50	39,077	2,550	42,832	3,755
M 45	4,50	42,077	2,550	45,832	3,755
M 48	5,00	44,752	3,200	50,025	5,273
M 52	5,00	48,752	3,200	54,024	5,272
M 56	5,50	52,428	3,200	57,267	4,839
M 60	5,50	56,428	3,200	61,267	4,839

ø Nominal	Thread pitch P	Pitch ø d2	Measuring wire ø dD	Measurement over wire M	(M-d2)
M 1	0,25	0,838	0,170	1,133	0,295
M 1,2	0,25	1,038	0,170	1,332	0,294
M 1,4	0,30	1,205	0,170	1,456	0,251
M 1,7	0,35	1,473	0,220	1,831	0,358
M 2	0,40	1,740	0,250	2,145	0,405
M 2,3	0,40	2,040	0,250	2,444	0,404
M 2,6	0,45	2,308	0,290	2,789	0,481
M 3	0,50	2,675	0,290	3,113	0,438
M 3,5	0,60	3,110	0,335	3,596	0,486
M 4	0,70	3,545	0,455	4,305	0,760
M 5	0,80	4,480	0,455	5,153	0,673
M 6	1,00	5,350	0,620	6,346	0,996
M 8	1,25	7,188	0,725	8,282	1,094
M 10	1,50	9,026	0,895	10,414	1,388
M 12	1,75	10,863	1,100	12,650	1,787

1) Wire in set

No.	Spindle diameter [mm]
313-101	6,35
313-102	8

Individual wires (content of 313-101)
One pair, support spindle ø 6,35 mm

No.	Measuring wire ø [mm]
952131	0,17
952132	0,195
952133	0,22
952134	0,25
952135	0,29
952136	0,335
952137	0,39
952138	0,455
952139	0,53
952140	0,62
952141	0,725
952142	0,895
952143	1,1
952144	1,35
952145	1,65
952146	2,05
952147	2,55
952148	3,2

Individual wires (content of 313-102)
One pair, support spindle ø 8 mm

No.	Measuring wire ø [mm]
952149	0,17
952150	0,195
952151	0,22
952152	0,25
952153	0,29
952154	0,335
952155	0,39
952156	0,455
952157	0,53
952158	0,62
952159	0,725
952160	0,895
952161	1,1
952162	1,35
952163	1,65
952164	2,05
952165	2,55
952166	3,2

All products to be sold to commercial customers. Product illustrations are without obligation. Product descriptions, in particular any and all technical specifications, are only binding when explicitly agreed upon. For suggested retail prices, please refer to the separate price list.

Mitutoyo

Micrometer Stands

Series 156

- Keeps both hands free for operating the micrometer and positioning the workpiece.
- Designed for batch or mass production measurements in manufacturing and quality assurance.

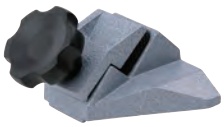

156-105-10

156-101-10

156-102

No.	Micrometer range	Remarks	Mass [g]
156-105-10	0-50 mm	Fixed angle type 45°	700
156-101-10	0 - 100 mm	Adjustable angle type	1210
156-102	100-300 mm	Vertical type	9000
156-103	300-1000 mm	Vertical type	8500

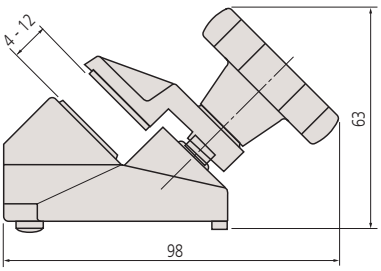

156-105-10

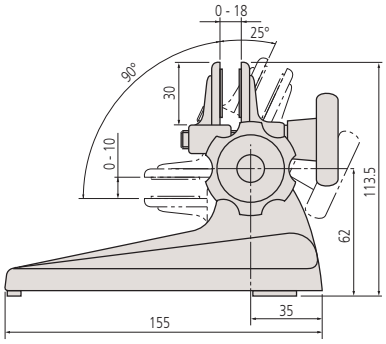

156-101-10

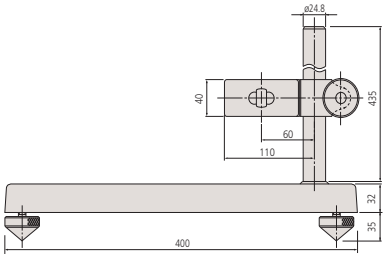

156-102

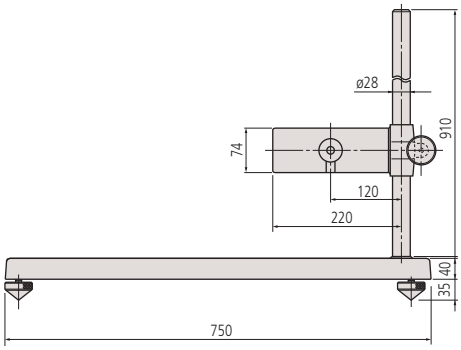

156-103

All products to be sold to commercial customers. Product illustrations are without obligation. Product descriptions, in particular any and all technical specifications, are only binding when explicitly agreed upon. For suggested retail prices, please refer to the separate price list.

Colour Coded Ratchets and Speeders

Micrometer accessories

Colour-coded ratchets

Colour-coded speeders for Ratchet Thimble Micrometer series 102-7XX, QuantuMike and Series 293 with ratched thimble

Colour-coded ratchets for analogue micrometer 0-300 mm

No.	Colour
985056	Black
985061	Red
985081	Blue
985071	Yellow
985076	Green
985066	Brown
04GZA239	Grey

Colour-coded ratchets for analogue micrometer 300-1000 mm

No.	Colour
04GZA243	Grey

Colour-coded speeders for digital micrometer 0-300 mm

No.	Colour
04GZA241	Grey

Colour-coded speeders for series 102-7XX, QuantuMike and series 293 with ratched thimble

No.	Colour
04AAB208	Grey
04GAA899	Black
04GAA900	Red
04GAA901	Yellow
04GAA902	Green
04GAA903	Blue

Micrometer Oil

Micrometer accessory

- Lubricates measuring instruments
- Lubricates spindle of micrometer
- Acid and resin free

No.	Remarks
207000D	500 ml spray

All products to be sold to commercial customers. Product illustrations are without obligation. Product descriptions, in particular any and all technical specifications, are only binding when explicitly agreed upon. For suggested retail prices, please refer to the separate price list.

Spindle attachment tips

Micrometer accessories

These spindle attachment tips give you an economical way to adapt a micrometer spindle for different tasks.
They offer the following benefits:
- You can use the tips on a micrometer spindle as an economical adaptation for particular measurement applications.
- They can also be mounted on micrometer anvils ø 6,35mm.
- The measuring range changes when a spindle attachment tip is mounted.

208062 208063 208064 208065 208066

No.	Description
208062	Spline
208063	Spherical
208064	Knife edge
208065	Knife edge
208066	Tray

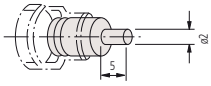

208062

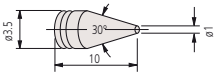

208063

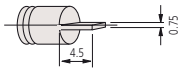

208064

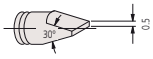

208065

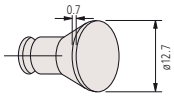

208066

Specifications

Tip length	10 mm ±5 µm

208066

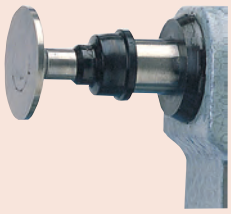

Ball attachment

Micrometer accessories

- Ball attachment to fit micrometer anvils (ø 6,35 mm only)

101468M

Sample application

Metric	
No.	ø ball [mm]
101468M	5

All products to be sold to commercial customers. Product illustrations are without obligation. Product descriptions, in particular any and all technical specifications, are only binding when explicitly agreed upon. For suggested retail prices, please refer to the separate price list.

Optical parallels

Specifications

Flatness	0,1 µm
Parallelism	0,2 µm
Diameter	30 mm

Series 157

These Optical Parallels allow you to inspect micrometers and other measuring tools.
They offer the following benefits:
- Using optical interference, they can inspect the measuring faces of micrometers for parallelism and flatness.
- Each set consists of 4 sizes designed for testing at each quarter revolution.

157-903

Metric

No.	Contents	Range of micrometer to be checked	Sizes of parallels included in set
157-903	157-101 157-102 157-103 157-104	0-25 mm	12 mm 12,12 mm 12,25 mm 12,37 mm
157-904	157-105 157-106 157-107 157-108	25-50 mm	25 mm 25,12 mm 25,25 mm 25,37 mm

Also available! Inch Models

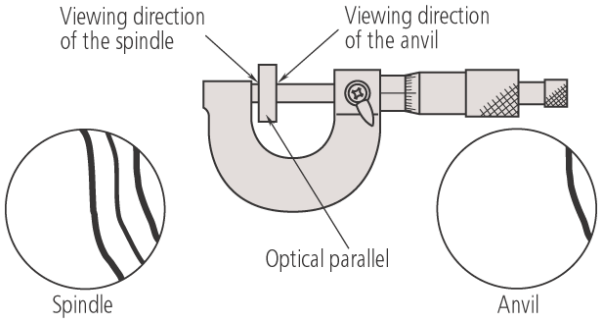

Testing a micrometer for flatness and parallelism of anvil and spindle faces : flatness is indicated by straightness and regular spacing of interference fringes, and parallelism by how many fringes are visible.

All products to be sold to commercial customers. Product illustrations are without obligation. Product descriptions, in particular any and all technical specifications, are only binding when explicitly agreed upon. For suggested retail prices, please refer to the separate price list.

Mitutoyo

Optical flats

Series 158

These optical flats are an essential tool for you to test the flatness of reflective surfaces such as gauge blocks and setting standards, through optical interference technology.

158-118

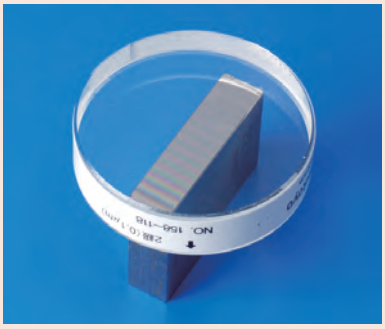

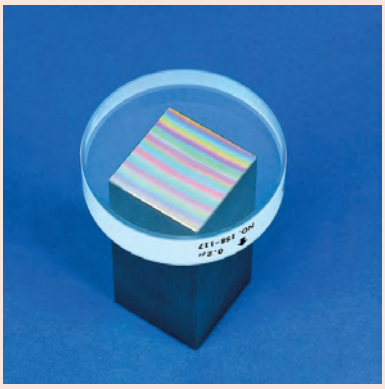

Metric

No.	Length [mm]	Flatness	Diameter [mm]
158-117	12	0,2 µm	45
158-119	15	0,2 µm	60
158-118	12	0,1 µm	45
158-120	15	0,1 µm	60

Also available! Inch Models

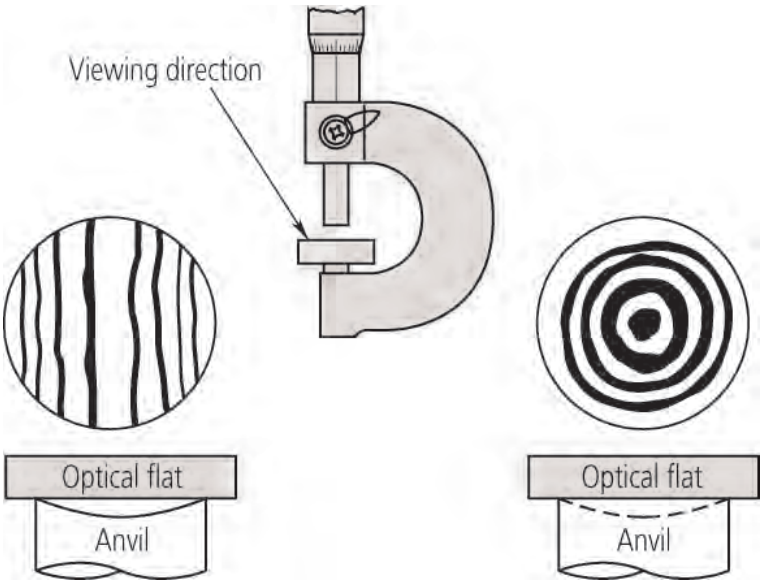

All products to be sold to commercial customers. Product illustrations are without obligation. Product descriptions, in particular any and all technical specifications, are only binding when explicitly agreed upon. For suggested retail prices, please refer to the separate price list.

Survey Micrometer Head

Specifications

Graduation	0,001mm/ 0,0005mm/ 0,0001mm

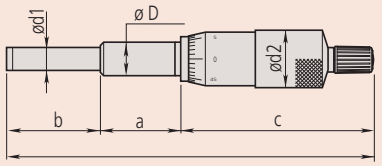

Total length l = a + b + c

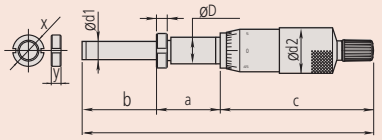

Total length l = a + b + c

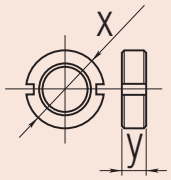

Micrometer Head Selector

Stem w/ locknut No.	Plain stem No.	Range mm	1)	2)	4)	5)	6)	Grad. mm	x mm	y mm	a mm	b mm	c mm	Ø D mm	Ø d1 mm	Ø d2 mm
110-105.		0-1				●	●	0,001			12,7	25	62,5	12	8	21
110-106.		0-1				●	●	0,0001			12,7	25	62,5	12	8	21
110-107.		0-1	●			●	●	0,001			12,7	25	62,5	12	8	21
110-108.		0-1	●			●	●	0,0001			12,7	25	62,5	12	8	21
110-101.		0-2,5				●	●	0,001			12,7	25	70	12	8	21
110-102.		0-2,5				●	●	0,0001			12,7	25	70	12	8	21
148-216.	148-215.	0-5	●					0,02	5,5	1,8	5	6,5	20,5	3,5	2	6
	148-201.	0-6,5						0,01			6	9	21,7	6	3,5	9,3
148-203.		0-6,5						0,01	8	3	7,5	7,5	21,7	6	3,5	9,3
148-302.	148-301.	0-6,5						0,01	14	4	9,5	9	23,5	9,5	6,35	15
148-304.	148-303.	0-6,5						0,01	14	4	9,5	9	23,5	9,5	6,35	20
148-306.	148-305.	0-6,5						0,01	14	4	9,5	9	23,5	9,5	6,35	29
148-221.	148-220.	0-6,5		●				0,01			15	9	22,5	6	3,5	9,3
148-223.	148-222.	0-6,5		●				0,01			17	7,5	22,5	6	3,5	9,3
148-317. 148-319.	148-316. 148-318.	0-6,5		●				0,01			18,7	9	22,5	9,5	6,35	15
148-207.	148-205.	0-6,5	●					0,01	8	3	7,5	7,5	21,7	6	3,5	9,3
148-323.	148-322.	0-6,5	●					0,01	14	4	9,5	9	23,5	9,5	6,35	15
148-143.	148-142.	0-6,5	●					0,002	14	4	9,5	14	31,5	9,5	5	13
148-343.	148-342.	0-6,5	●					0,002	14	4	9,5	9	23,5	9,5	6,35	15
148-243.	148-242.	0-6,5	●					0,002	8	3	6	9	21,9	6	3,5	9,3
152-283.		0-10					●	0,002	16	4	26	19	53	12	6,35	49
110-502.		0-13	●			●		0,0005			15	15	67,5	9,5	5	13
148-133. 148-802.	148-132. 148-801.	0-13	●					0,01	14	4	9,5	17,5	31,5	9,5	5	13
	148-853.	0-13	●					0,01			9,5	15,5	37	9,5	5	13
148-804.	148-803.	0-13	●	●				0,01	14	4	9,5	17,5	40	9,5	5	13
148-854.		0-13	●	●				0,01	14	4	9,5	15,5	45,5	9,5	5	13
	148-104.	0-13						0,001	14	4	9,5	17,5	31,5	9,5	5	13
148-103.		0-13						0,01	14	4	9,5	17,5	31,5	9,5	5	13
148-308.	148-307.	0-13						0,01	14	4	9,5	15,5	30	9,5	6,35	15
148-310.	148-309.	0-13						0,01	14	4	9,5	15,5	30	9,5	6,35	20
148-312.	148-311.	0-13						0,01	14	4	9,5	15,5	30	9,5	6,35	29
148-508.	148-503.	0-13						0,01	14	4	9,5	15,5	37	9,5	5	13
	148-513.	0-13						0,01			9,5	15,5	37	9,5	5	13
148-120.	148-121.	0-13		●				0,01	14	4	9,5	17,5	40,1	9,5	5	13
148-504.	148-506.	0-13		●				0,01	14	4	9,5	15,5	45,6	9,5	5	13
148-151.	148-150.	0-13		●				9,5			18,7	17,5	31	12	5	13
148-153.	148-152.	0-13		●			●	9,5			18,7	17,5	31	12	5	13
149-131.	149-132.	0-15					●	0,01	14	4	15	17	43,5	9,5	6,35	15
	152-101.	0-15					●	0,01			16	18	60	12	8	30
	153-101.	0-15				●	●	0,01			10	17	58,5	9,5	6,35	15,3
149-184.	149-183.	0-15		●			●	0,01	14	4	9,5	17	49	9,5	6,35	15
149-802.	149-801.	0-15	●				●	0,01	14	4	15	17	43,5	9,5	6,35	15
150-189.	150-190.	0-25			●		●	0,001	14	4	15	27	67	10	6,35	18
151-221.	151-222.	0-25			●		●	0,001	16	4	29	34	70	12	8	21
150-191.	150-192.	0-25			●		●	0,01	14	4	15	27	67	10	6,35	18
151-223.	151-224.	0-25			●		●	0,01	16	4	29	34	70	12	8	21
150-195.	150-196.	0-25					●	0,01	14	4	15	27	54	10	6,35	18
	152-102.	0-25					●	0,01			16	28	69	12	8	30
	152-332.	0-25					●	0,002			29	34	66	12	8	49

1) Spherical measuring surface 2) With spindle lock 4) With ratchet 5) With non-rotating spindle 6) Carbide tipped

x and y apply to heads with clamp nut

All products to be sold to commercial customers. Product illustrations are without obligation. Product descriptions, in particular any and all technical specifications, are only binding when explicitly agreed upon. For suggested retail prices, please refer to the separate price list.

Mitutoyo

Survey Micrometer Head

Micrometer Head Selector

Stem w/ locknut No.	Plain stem No.	Range	1)	2)	3)	4)	5)	6)	7)	Grad. mm	x mm	y mm	a mm	b mm	c mm	Ø D mm	Ø d1 mm	Ø d2 mm
150-220.	**150-219.**	0 - 25								0,01	14	4	15	65	53,5	10	6,35	18
	153-203.	0 - 25					●	●		0,01			10	27	70,5	12	8	18
	153-204.	0 - 25					●	●		0,001			10	27	71	12	8	18
	153-301.	0 - 25					●	●		0,0005				28,6	31,8	18	8	85,5
	153-201.	0 - 25				●	●	●		0,01			10	27	87,5	12	8	18
	153-202.	0 - 25				●	●	●		0,001			10	27	88	12	8	18
150-210.	**150-209.**	0 - 25		●		●		●		0,01	14	4	15	27	78,5	10	6,35	18
	250-301.	0 - 25		●		●		●		0,01			15	27	94	10	6,35	18
350-252-30.	**350-251-30.**	0 - 25		●		●		●		0,001	14	4		27	114,5	10	6,35	18
350-272-30.	**350-271-30.**	0 - 25		●		●		●		0,001				27	113,5	12	6,35	18
350-282-30.	**350-281-30.**	0 - 25		●		●		●		0,001	16	4		27	114,5	12	6,35	18
150-212.	**150-211.**	0 - 25		●				●		0,01	14	4	15	27	65	10	6,35	18
151-226.	**151-225.**	0 - 25		●				●		0,01	16	4	19	34,5	66	12	8	21
350-261-30.		0 - 25		●					●	0,001				38,7	101	12	6,35	18
150-802.	**150-801.**	0 - 25	●			●		●		0,01	14	4	15	27	67	10	6,35	18
350-254-30.	**350-253-30.**	0 - 25	●	●		●				0,001	14	4		27	113,5	10	6,35	18
350-274-30.	**350-273-30.**	0 - 25	●	●		●				0,001	16	4		27	113,5	12	6,35	18
350-284-30.	**350-283-30.**	0 - 25	●	●		●				0,001	16	4		27	114,5	12	6,35	18
	152-348.	0-25-0			●			●		0,002			29	34	66	12	8	49
	152-401.	0-25-0	●					●		0,001			14	41,7	84,3	18	8	49
151-255.	**151-256.**	0 - 50				●		●		0,01	16	4	29	59	103	12	8	21
151-259.	**151-260.**	0 - 50						●		0,01	16	4	29	59	90	12	8	21
	152-103.	0 - 50						●		0,01			16	53	94	12	8	30
	164-161.	0 - 50					●	●		0,001			14	65	143	18	11	49
	197-101.	0 - 50					●	●		0,005			14	65	64	18	8	49
	152-380.	0-50-0			●			●		0,002			29	34	66	12	8	49
148-211.	**148-209.**	6,5-0			●					0,01	8	3	7,5	7,5	21,7	6	3,5	9
148-822.	**148-821.**	13-0			●					0,01	14	4	9,5	17,5	31,5	9,5	5	13
	148-863.	13-0			●					0,01			9,5	15,5	37	9,5	5	13
148-824.	**148-823.**	13-0		●	●					0,01	16	4	9,5	17,5	40,1	9,5	5	13
	148-864.	13-0		●	●					0,01			9,5	15,5	45,6	9,5	5	13
149-822.	**149-821.**	15-0			●			●		0,01	16	4	15	17	43,5	9,5	6,35	15
150-822.	**150-821.**	25-0			●	●		●		0,01	16	4	15	27	84	10	6,35	18

1) Spherical measuring surface 2) With spindle lock 3) Reverse reading 4) With ratchet 5) With non-rotating spindle 6) Carbide tipped 7) Non-rotating measuring surface

x and y apply to heads with clamp nut

Specifications

Graduation	0,001mm/ 0,0005mm/ 0,0001mm

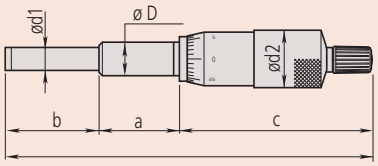

Total length l = a + b + c

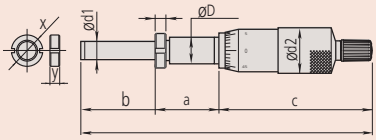

Total length l = a + b + c

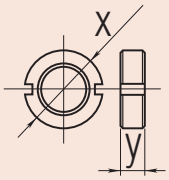

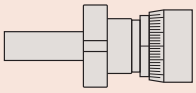

With clamp nut

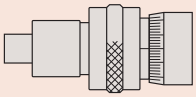

With spindle lock

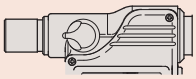

With spindle lock 250-301 / 350-2XX

With spherical measuring surfaces

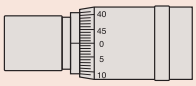

With reverse reading

All products to be sold to commercial customers. Product illustrations are without obligation. Product descriptions, in particular any and all technical specifications, are only binding when explicitly agreed upon. For suggested retail prices, please refer to the separate price list.

Digital Micrometer Head

Series 164

- Display and operating unit may be rotated by 330° for convenience.
- For integration into machinery and measuring instruments.
- Digital micrometer head with non-rotating spindle.

Functions	Series 164
ZERO/ABS	●
Auto Power OFF after 20 min. non use	●
2 x PRESET	●
Data output	●
Counting direction switchable	●

Specifications

Accuracy	Refer to the list of specifications (excluding quantizing error)
Digital step	0,001 mm
Measuring spindle	spindle pitch 0,5 mm
Display	LCD character height 7,5 mm
Power supply	2 batteries SR-44
Battery life	approx. 1,8 years

Optional accessories

No.	Description
959149	Digimatic Cable, Straight, Data Button, 1m
959150	Digimatic Cable, Straight, Data Button, 2m
06ADV380C	USB Input Tool Direct (Digimatic USB), Straight, with Data Button
02AZD790C	U-WAVE T Connection Cable C, Straight, with Data Button

Consumable spares

No.	Description
938882	Battery SR44 1.5V

164-163

Metric

No.	Range [mm]	Remarks	Spindle end	Stem Ø	Accuracy	Mass [g]
164-163	0-50	Non-rotating spindle	Carbide tipped	18 mm	±3 µm	490

Also available! Inch/Metric Models

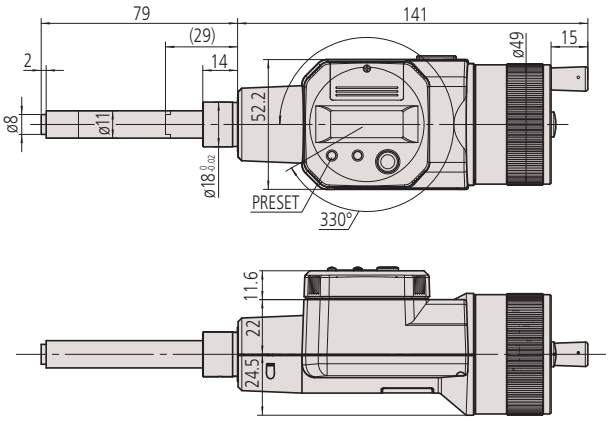

164-163
( ): with spindle full retracted

All products to be sold to commercial customers. Product illustrations are without obligation. Product descriptions, in particular any and all technical specifications, are only binding when explicitly agreed upon. For suggested retail prices, please refer to the separate price list.

Mitutoyo

Digital Micrometer Head with 10 mm Stem

Series 350

This Micrometer Head has a 25mm range and a 10mm stem, and offers the following benefits:
- You can integrate it into machinery and measuring instruments.
- Measurement values are clearly displayed in 0,001mm increments.
- Stem diameter: 10mm.

350-251-30

Metric

No.	Range [mm]	Spindle end	Stem Ø	Stem	Fixture thickness for clamp nut [mm]	Mass [g]
350-251-30	0-25	Flat (carbide tip)	10 mm	Plain		230
350-252-30	0-25	Flat (carbide tip)	10 mm	w/ clamp nut	11,5	230
350-253-30	0-25	Spherical (SR4)	10 mm	Plain		230
350-254-30	0-25	Spherical (SR4)	10 mm	w/ clamp nut	11,5	230

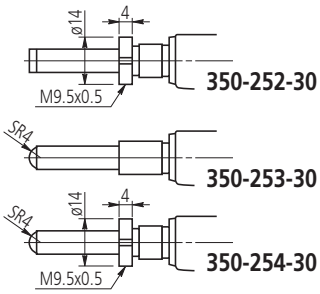

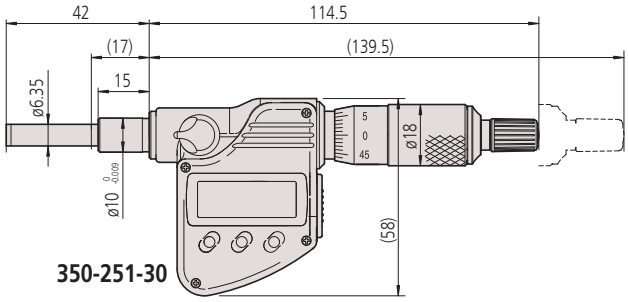

( ): with spindle full retracted

Functions	Series 350
ZERO/ABS	●
Auto Power OFF after 20 min. non use	●
2 x PRESET	●
Function lock	●
Data output	●
HOLD	●

Specifications

Accuracy	±2 µm (excluding quantizing error)
Digital step	0,001 mm
Measuring spindle	With spindle lock, ø 6,35 mm, spindle pitch 0,5 mm
Display	LCD, Character Height 7,5 mm
Power supply	Battery SR-44
Battery life	approx. 2,4 years

Optional accessories

No.	Description
05CZA662	Digimatic Cable with Data Button IP Type, 1m, Micrometer Type
05CZA663	Digimatic Cable with Data Button IP Type, 2m, Micrometer Type
02AZD790B	U-WAVE T Connection Cable B, with Data Button IP Micrometer Type
06ADV380B	USB Input Tool Direct (Digimatic USB), with Data Button IP Micrometer Type

Consumable spares

No.	Description
938882	Battery SR44 1.5V

All products to be sold to commercial customers. Product illustrations are without obligation. Product descriptions, in particular any and all technical specifications, are only binding when explicitly agreed upon. For suggested retail prices, please refer to the separate price list.

Digital Micrometer Head with 12 mm Stem

Functions	Series 350
ZERO/ABS	●
Auto Power OFF after 20 min. non use	●
2 x PRESET	●
Function lock	●
Data output	●
HOLD	●

Specifications

Accuracy	±2 µm (excluding quantizing error)
Digital step	0,001 mm
Measuring spindle	With spindle lock, ø 6,35 mm spindle pitch 0,5 mm
Display	LCD, Character Height 7,5 mm
Power supply	Battery SR-44
Battery life	approx. 2,4 years

Optional accessories

No.	Description
05CZA662	Digimatic Cable with Data Button IP Type, 1m, Micrometer Type
05CZA663	Digimatic Cable with Data Button IP Type, 2m, Micrometer Type
02AZD790B	U-WAVE T Connection Cable B, with Data Button IP Micrometer Type
06ADV380B	USB Input Tool Direct (Digimatic USB), with Data Button IP Micrometer Type

Consumable spares

No.	Description
938882	Battery SR44 1.5V
305307	Bush, Series 350, Ø 12/18 mm, 14 mm length
306625	Bush, Series 350, Ø 12/18 mm, 16 mm length

306625 Standard for 350-271-30, 350-273-30
305307 Standard for 350-261-30

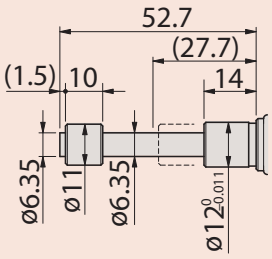

350-261-10

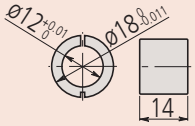

305307

Series 350

This Micrometer Head has a 25mm range and a 12mm stem, and offers the following benefits:

- You can integrate it into machinery and measuring instruments.
- Its excellent water and dust resistance (IP65 protection level) lets you use it in machining situations that include splashing coolant fluid (except types with threaded stem).
- Measurement values are clearly displayed in 0,001mm increments.

350-281-30

Metric

No.	Range [mm]	Remarks	Spindle end	Stem Ø	Stem	Fixture thickness for clamp nut [mm]	Mass [g]
350-271-30	0-25	IP65	Flat (carbide tip)	12 /18 mm	Plain		230
350-272-30	0-25	threaded stem	Flat (carbide tip)	M12 x 1	w/ clamp nut	11,5	230
350-273-30	0-25	IP65	Spherical (SR4)	12 /18 mm	Plain		230
350-274-30	0-25	threaded stem	Spherical (SR4)	M12 x 1	w/ clamp nut	11,5	230
350-281-30	0-25	IP65	Flat (carbide tip)	12 mm	Plain		230
350-282-30	0-25	IP65	Flat (carbide tip)	12 mm	w/ clamp nut	11,5	230
350-283-30	0-25	IP65	Spherical (SR4)	12 mm	Plain		230
350-284-30	0-25	IP65	Spherical (SR4)	12 mm	w/ clamp nut	11,5	230
350-261-30	0-25	IP65, w/ non-rotating measuring face w/o ratched stop	Flat	12/18 mm	Plain		235

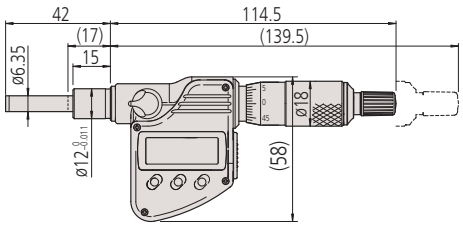

350-281-30 ( ) with spindle full retracted

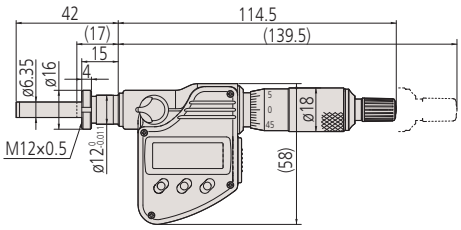

350-282-30

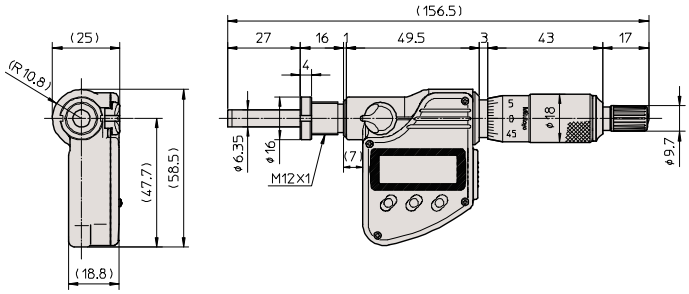

350-272-30

All products to be sold to commercial customers. Product illustrations are without obligation. Product descriptions, in particular any and all technical specifications, are only binding when explicitly agreed upon. For suggested retail prices, please refer to the separate price list.

Micrometer Head with Counter

Series 250 - Digit counter type

This Digit counter type is a micrometer head with a mechanical counter.

250-301

Metric

No.	Range [mm]	Spindle end	Stem Ø	Accuracy	Stem	Mass [g]
250-301	0-25	Flat (carbide tip)	10 mm	±2 µm	Plain	165

Also available! Inch Models

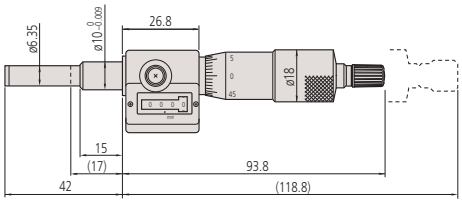

250-301

Specifications

Scale	Thimble and sleeve satin chrome
Graduation	0,01mm
Measuring spindle	With spindle lock, ø 6,35 mm, spindle pitch 0,5 mm

Micro Jack

Series 7

This Micro Jack allows you to make easy adjustments under a heavy load.
It offers the following benefits:
- Adjustments can easily be made under a heavy load.
- You can use it to accurately level machines, surface plates, and other precision instruments.

7850

Metric

No.	Range [mm]	Remarks
7850	60-75	Max. load : 400kg

Specifications

Graduation	0,01mm

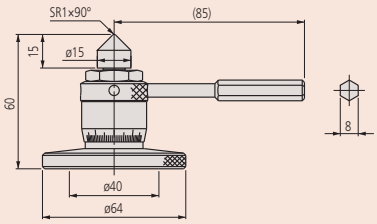

7850

All products to be sold to commercial customers. Product illustrations are without obligation. Product descriptions, in particular any and all technical specifications, are only binding when explicitly agreed upon. For suggested retail prices, please refer to the separate price list.

Fine Spindle Feed Micrometer Head 5 mm and 6.5 mm Range

Specifications

Scale	Thimble and sleeve satin chrome finish
Graduation	0,002 mm / 0,004 mm (148-244, 148-245)
Spindle pitch	0,1 mm
Measuring surfaces	Hardened steel (>60 HRC)

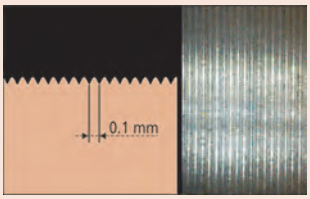

Pitch 0,1 mm

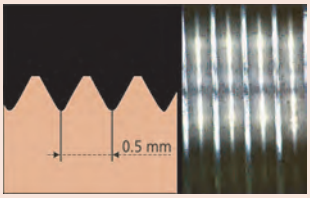

Pitch 0,5 mm

Series 148 - Very fine spindle feed of 0,1/rev

These micrometer heads have a very fine spindle feed of 0,1mm/rev.
They offer the following benefits:
- Small size micrometer heads with extremely fine pitch of 0,1mm.
- Ideal for fine adjustment applications in scientific apparatus.

148-143

148-243

Metric

No.	Range [mm]	Spindle end	Stem Ø	Accuracy [µm]	Stem	Fixture thickness for clamp nut [mm]	Mass [g]
148-244	0-5	Spherical (SR1,5)	3,5 mm	±5	Plain		4
148-245	0-5	Spherical (SR1,5)	3,5 mm	±5	w/ clamp nut	3	5
148-142	0-6,5	Spherical (SR4)	9,5 mm	±2	Plain		31
148-143	0-6,5	Spherical (SR4)	9,5 mm	±2	w/ clamp nut	6	34
148-342	0-6,5	Spherical (SR4)	9,5 mm	±2	Plain		29
148-343	0-6,5	Spherical (SR4)	9,5 mm	±2	w/ clamp nut	6	31
148-242	0-6,5	Spherical (SR3)	6 mm	±5	Plain		10
148-243	0-6,5	Spherical (SR3)	6 mm	±5	w/ clamp nut	4	10

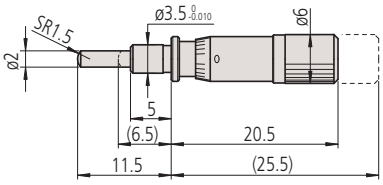

148-244

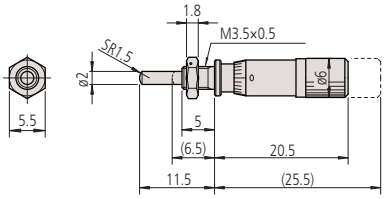

148-245

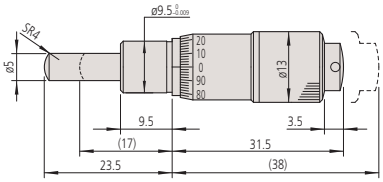

148-142

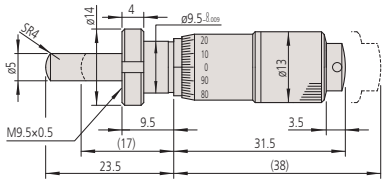

148-143

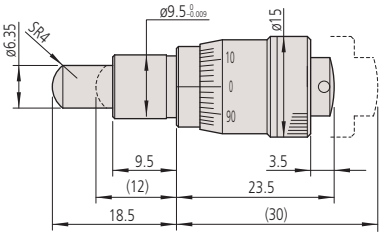

148-342

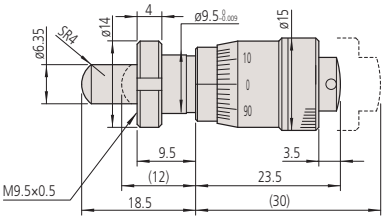

148-343

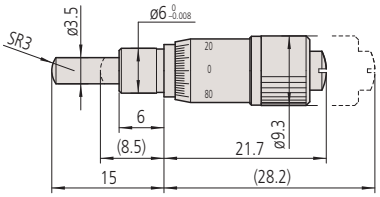

148-242

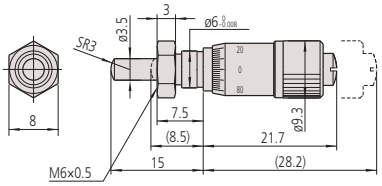

148-243

( ): with spindle full retracted

All products to be sold to commercial customers. Product illustrations are without obligation. Product descriptions, in particular any and all technical specifications, are only binding when explicitly agreed upon. For suggested retail prices, please refer to the separate price list.

Micrometer Head 5 mm and 6,5 mm Range

Series 148 - Ultra small

These ultra small, miniature micrometer heads allow you to easily incorporate them into machines.

148-201

148-215

Specifications

Accuracy	±5 µm
Scale	Thimble and sleeve satin chrome finish
Graduation	0,02 mm (148-215/ 148-216) 0,01 mm
Spindle pitch	0,5 mm
Measuring surfaces	Hardened steel (>60 HRC)

Metric

No.	Range [mm]	Spindle end	Stem Ø	Stem	Fixture thickness for clamp nut [mm]	Special features	Mass [g]
148-215	0-5	Spherical (SR1,5)	3,5 mm	Plain		-	4
148-216	0-5	Spherical (SR1,5)	3,5 mm	w/ clamp nut	3	-	4
148-201	0-6,5	Flat	6 mm	Plain		-	10
148-203	0-6,5	Flat	6 mm	w/ clamp nut	4	-	10
148-205	0-6,5	Spherical (SR3)	6 mm	Plain		-	10
148-207	0-6,5	Spherical (SR3)	6 mm	w/ clamp nut	4	-	10
148-209	0-6,5	Flat	6 mm	Plain		Reverse reading	10
148-211	0-6,5	Flat	6 mm	w/ clamp nut	4	Reverse reading	10

Also available! Inch Models

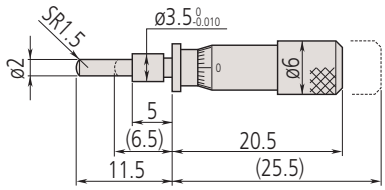

148-215

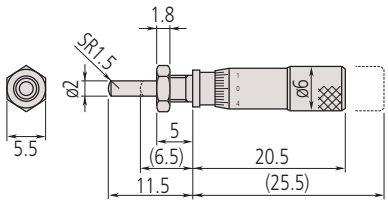

148-216

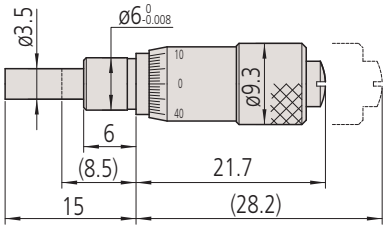

148-201

(): with spindle full retracted

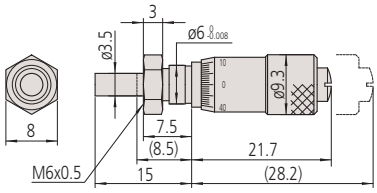

148-203

All products to be sold to commercial customers. Product illustrations are without obligation. Product descriptions, in particular any and all technical specifications, are only binding when explicitly agreed upon. For suggested retail prices, please refer to the separate price list.

Micrometer Head 6,5 mm and 13 mm Range

Specifications

Accuracy	±2 µm
Scale	Thimble and sleeve satin chrome finish
Graduation	0,01 mm
Spindle pitch	0,25 mm
Measuring surfaces	Hardened steel (> 60 HRC)

Series 148 - Fine spindle feed of 0,25/rev

These micrometer heads are a standard, small-sized type with a 13mm measuring range. They offer the following benefits:

- Carbide-tipped spindle
- The small micrometer head gives you a 15mm measuring range and a tungsten carbide measuring surface.

148-132

Metric

No.	Range [mm]	Spindle end	Stem Ø	Stem	Fixture thickness for clamp nut [mm]	Mass [g]
148-322	0-6,5	Spherical (SR4)	9,5 mm	Plain		30
148-323	0-6,5	Spherical (SR4)	9,5 mm	w/ clamp nut	6	35
148-132	0-13	Spherical (SR4)	9,5 mm	Plain		30
148-133	0-13	Spherical (SR4)	9,5 mm	w/ clamp nut	6	35

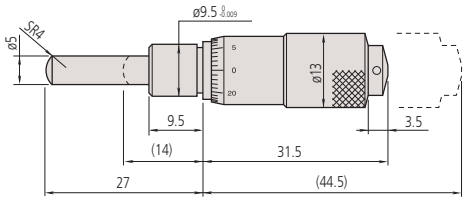

148-132 mm

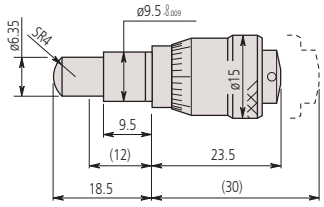

148-322 mm

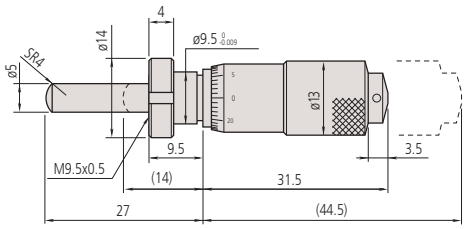

148-133 mm

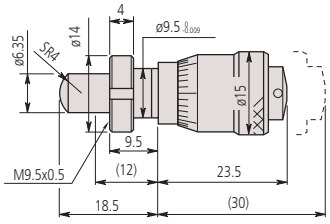

148-323 mm

( ): with spindle full retracted

All products to be sold to commercial customers. Product illustrations are without obligation. Product descriptions, in particular any and all technical specifications, are only binding when explicitly agreed upon. For suggested retail prices, please refer to the separate price list.

Micrometer Head 6,5 mm and 13 mm Range

Series 148 - Large Thimble Diameter for Easy Reading

These micrometer heads feature a locking screw so you can lock the spindle in any position with the knurled locking screw.

Metric

No.	Range [mm]	Spindle end	Stem Ø	Stem	Fixture thickness for clamp nut [mm]	Thimble Ø	Mass [g]
148-301	0-6,5	Flat	9,5 mm	Plain		15 mm	26
148-302	0-6,5	Flat	9,5 mm	w/ clamp nut	6	15 mm	26
148-303	0-6,5	Flat	9,5 mm	Plain		20 mm	39
148-304	0-6,5	Flat	9,5 mm	w/ clamp nut	6	20 mm	39
148-305	0-6,5	Flat	9,5 mm	Plain		29 mm	71
148-306	0-6,5	Flat	9,5 mm	w/ clamp nut	6	29 mm	71
148-313	0-6,5	Spherical (SR4)	9,5 mm	Plain		15 mm	26
148-314	0-6,5	Spherical (SR4)	9,5 mm	w/ clamp nut	6	15 mm	26
148-307	0-13	Flat	9,5 mm	Plain		15 mm	35
148-308	0-13	Flat	9,5 mm	w/ clamp nut	6	15 mm	35
148-309	0-13	Flat	9,5 mm	Plain		20 mm	55
148-310	0-13	Flat	9,5 mm	w/ clamp nut	6	20 mm	55
148-311	0-13	Flat	9,5 mm	Plain		29 mm	103
148-312	0-13	Flat	9,5 mm	w/ clamp nut	6	29 mm	103

Also available! Inch Models

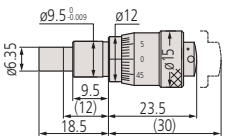
148-301

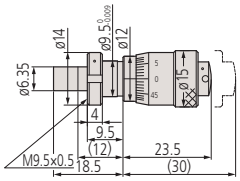
148-302

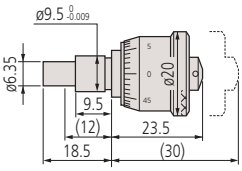
148-303

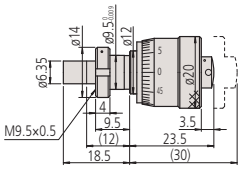
148-304

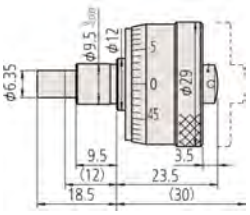
148-305

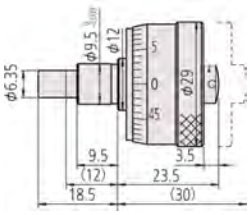
148-306

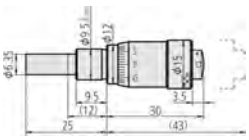
148-307

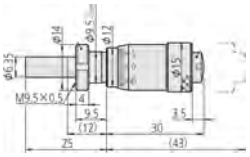
148-308

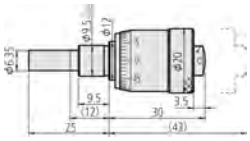
148-309

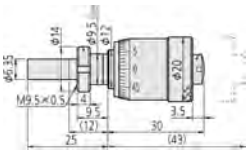
148-310

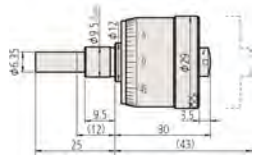
148-311

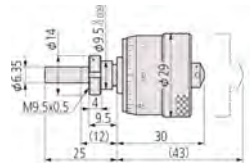
148-312

( ): with spindle full retracted

Specifications

Accuracy	±2 µm
Scale	Thimble and sleeve satin chrome finish
Graduation	0,01 mm
Spindle pitch	0,5 mm
Measuring surfaces	Hardened steel (>60 HRC)

148-301

148-303

148-305

148-313

148-314

All products to be sold to commercial customers. Product illustrations are without obligation. Product descriptions, in particular any and all technical specifications, are only binding when explicitly agreed upon. For suggested retail prices, please refer to the separate price list.

Micrometer Head 6,5 mm Range with Spindle Lock

Series 148 - Locking screw Type

These micrometer heads feature a knurled locking screw so you can lock the spindle in any position with the knurled locking screw.

148-223

148-319

148-220

148-316

Specifications

Scale	Thimble and sleeve satin chrome finish
Graduation	0,01 mm
Spindle pitch	0,5 mm
Measuring surfaces	Hardened steel (>60 HRC)

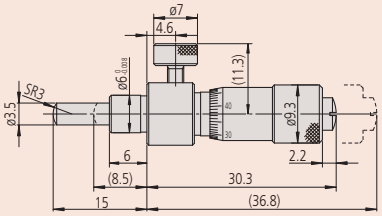

148-222

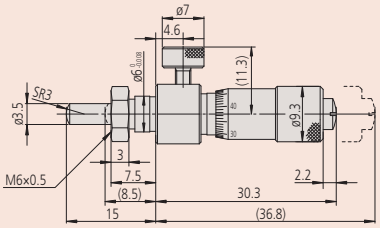

148-223

Metric

No.	Range [mm]	Spindle end	Stem Ø	Accuracy [µm]	Stem	Fixture thickness for clamp nut [mm]	Mass [g]
148-220	0-6,5	Flat	6 mm	±5	Plain		16
148-221	0-6,5	Flat	6 mm	±5	w/ clamp nut	4	17
148-222	0-6,5	Spherical (SR3)	6 mm	±5	Plain		16
148-223	0-6,5	Spherical (SR3)	6 mm	±5	w/ clamp nut	4	17
148-316	0-6,5	Flat	9,5 mm	±2	Plain		40
148-317	0-6,5	Flat	9,5 mm	±2	w/ clamp nut	6	43
148-318	0-6,5	Spherical (SR4)	9,5 mm	±2	Plain		40
148-319	0-6,5	Spherical (SR4)	9,5 mm	±2	w/ clamp nut	6	43

Also available! Inch Models

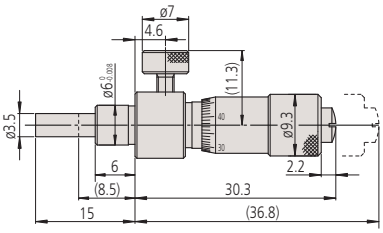

148-220

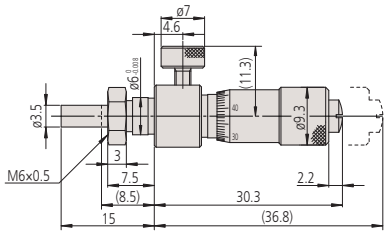

148-221

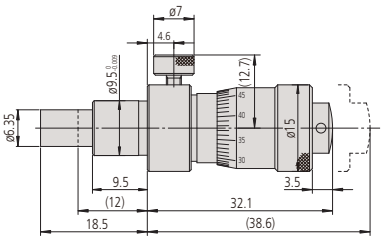

148-316

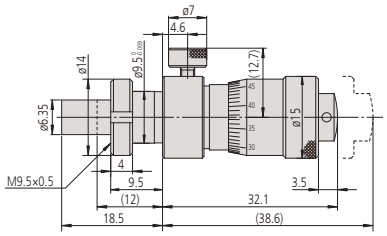

148-317

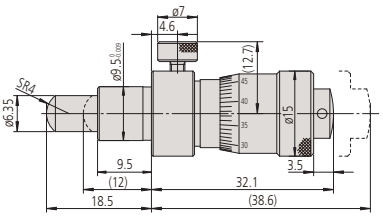

148-318

( ): with spindle full retracted

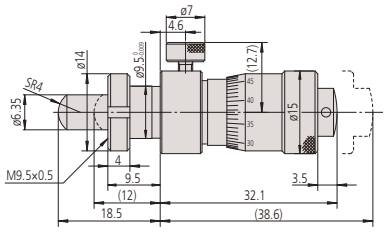

148-319

All products to be sold to commercial customers. Product illustrations are without obligation. Product descriptions, in particular any and all technical specifications, are only binding when explicitly agreed upon. For suggested retail prices, please refer to the separate price list.

Micrometer Head 13 mm Range with Spindle Lock

Series 148 - Locking screw Type

These micrometer heads feature a locking screw so you can lock the spindle in any position with the knurled locking screw.

148-150

148-153

Specifications

Accuracy	±2 µm
Scale	Thimble and sleeve satin chrome finish
Graduation	0,01 mm
Spindle pitch	0,5 mm
Measuring surfaces	Hardened steel (>60 HRC)

Metric

No.	Range [mm]	Spindle end	Stem Ø	Stem	Fixture thickness for clamp nut [mm]	Mass [g]
148-150	0-13	Flat	9,5 mm	Plain		40
148-151	0-13	Flat	9,5 mm	w/ clamp nut	6	43
148-152	0-13	Spherical (SR4)	9,5 mm	Plain		40
148-153	0-13	Spherical (SR4)	9,5 mm	w/ clamp nut	6	43

Also available! Inch Models

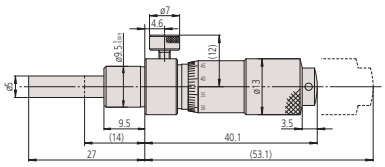

148-150

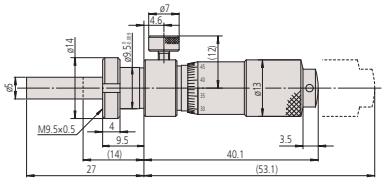

148-151

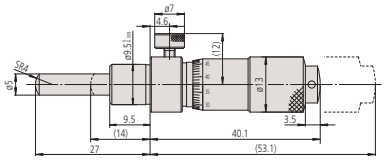

148-152

( ): with spindle full retracted

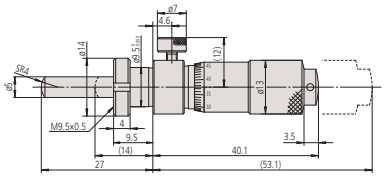

148-153

All products to be sold to commercial customers. Product illustrations are without obligation. Product descriptions, in particular any and all technical specifications, are only binding when explicitly agreed upon. For suggested retail prices, please refer to the separate price list.

Micrometer Head 13 mm Range with Zero Thimble

Series 148 - Standard type, small size with zero-adjustable thimble.

These are a standard type of small size micrometer heads with a zero-adjustable thimble. They offer the following benefits:
– You can make a zero-setting at any position by loosening the setscrew in the thimble.

Specifications

Accuracy	±2 µm
Scale	Thimble and sleeve satin chrome finish
Graduation	0,01 mm
Spindle pitch	0,5 mm
Measuring surfaces	Hardened steel (> 60 HRC)

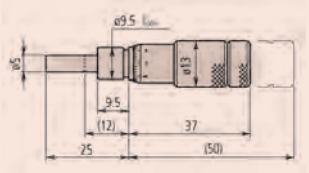

148-503

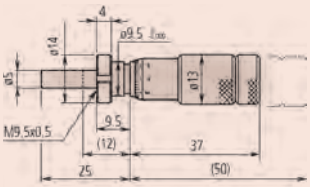

148-508

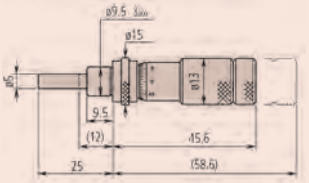

148-506

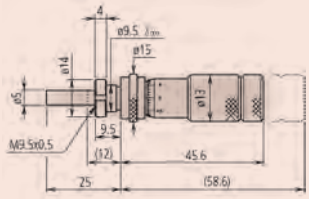

148-504

( ): with spindle full retracted

148-503

148-504

Metric

No.	Range [mm]	Spindle end	Stem Ø	Stem	Fixture thickness for clamp nut [mm]	Special features	Mass [g]
148-503	0-13	Flat	9,5 mm	Plain		-	35
148-513	0-13	Flat	9,5 mm	Plain		Stainless steel	35
148-508	0-13	Flat	9,5 mm	w/ clamp nut	6	-	40
148-853	0-13	Spherical (SR4)	9,5 mm	Plain		-	40
148-518	0-13	Flat	9,5 mm	w/ clamp nut	6	Stainless steel	40
148-858	0-13	Spherical (SR4)	9,5 mm	w/ clamp nut	6	-	40

Metric — Reverse reading

No.	Range [mm]	Spindle end	Stem Ø	Stem	Fixture thickness for clamp nut [mm]	Mass [g]
148-863	0-13	Flat	9,5 mm	Plain		35
148-868	0-13	Flat	9,5 mm	w/ clamp nut	6	40

Metric — Reverse reading / with spindle lock

No.	Range [mm]	Spindle end	Stem Ø	Stem	Fixture thickness for clamp nut [mm]	Mass [g]
148-864	0-13	Flat	9,5 mm	w/ clamp nut	6	40
148-866	0-13	Flat	9,5 mm	Plain		35

Metric — With spindle lock

No.	Range [mm]	Spindle end	Stem Ø	Stem	Fixture thickness for clamp nut [mm]	Mass [g]
148-506	0-13	Flat	9,5 mm	Plain		35
148-504	0-13	Flat	9,5 mm	w/ clamp nut	6	40
148-854	0-13	Spherical (SR4)	9,5 mm	w/ clamp nut	6	40
148-856	0-13	Spherical (SR4)	9,5 mm	Plain		35

Also available! Inch Models

All products to be sold to commercial customers. Product illustrations are without obligation. Product descriptions, in particular any and all technical specifications, are only binding when explicitly agreed upon. For suggested retail prices, please refer to the separate price list.

Mitutoyo

Micrometer Head 13 mm Range

Series 148 - Small standard type

These micrometer heads are a standard, small-sized type with a 13mm measuring range.

148-104

148-103

148-121

148-120

Metric

No.	Range [mm]	Spindle end	Stem Ø	Stem	Fixture thickness for clamp nut [mm]	Special features	Mass [g]
148-104	0-13	Flat	9,5 mm	Plain		-	30
148-103	0-13	Flat	9,5 mm	w/ clamp nut	6	-	35
148-801	0-13	Spherical (SR4)	9,5 mm	Plain		-	30
148-802	0-13	Spherical (SR4)	9,5 mm	w/ clamp nut	6	-	35
148-821	0-13	Flat	9,5 mm	Plain		Reverse reading	30
148-822	0-13	Flat	9,5 mm	w/ clamp nut	6	Reverse reading	35

Metric

With spindle lock

No.	Range [mm]	Spindle end	Stem Ø	Stem	Fixture thickness for clamp nut [mm]	Special features	Mass [g]
148-121	0-13	Flat	9,5 mm	Plain		-	40
148-120	0-13	Flat	9,5 mm	w/ clamp nut	6	-	45
148-803	0-13	Spherical (SR4)	9,5 mm	Plain		-	40
148-804	0-13	Spherical (SR4)	9,5 mm	w/ clamp nut	6	-	45
148-823	0-13	Flat	9,5 mm	Plain		Reverse reading	40
148-824	0-13	Flat	9,5 mm	w/ clamp nut	6	Reverse reading	45

Specifications

Accuracy	±2 µm
Scale	Thimble and sleeve satin chrome finish
Graduation	0,01 mm
Spindle pitch	0,5 mm
Measuring surfaces	Hardened steel (> 60 HRC)

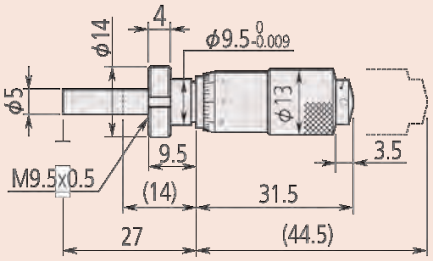

148-103

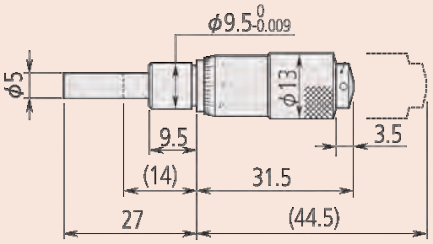

148-104

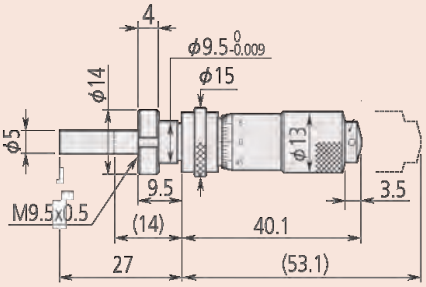

148-120

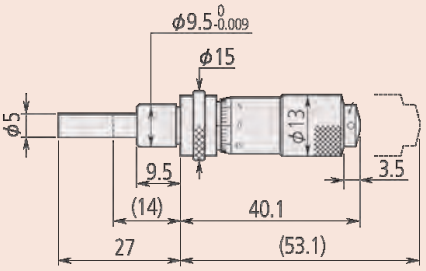

148-121

( ) with spindle full retracted

All products to be sold to commercial customers. Product illustrations are without obligation. Product descriptions, in particular any and all technical specifications, are only binding when explicitly agreed upon. For suggested retail prices, please refer to the separate price list.

Micrometer Head 15 mm Range

Specifications

Accuracy	±2 µm
Scale	Thimble and sleeve satin chrome finish
Graduation	0,01mm
Spindle pitch	0,5 mm
Measuring surfaces	Carbide tipped

Series 149 - Small standard type with carbide-tipped spindle

– Small micrometer head with 15 mm measuring range and tungsten carbide measuring surface.

149-132

149-184

Metric

No.	Range [mm]	Spindle end	Stem Ø	Stem	Fixture thickness for clamp nut [mm]	Special features	Mass [g]
149-132	0-15	Flat (carbide tip)	9,5 mm	Plain		-	55
149-131	0-15	Flat (carbide tip)	9,5 mm	w/ clamp nut	11,5	-	60
149-801	0-15	Spherical (SR4)	9,5 mm	Plain		-	55
149-802	0-15	Spherical (SR4)	9,5 mm	w/ clamp nut	11,5	-	60
149-821	0-15	Flat (carbide tip)	9,5 mm	Plain		Reverse reading	55
149-822	0-15	Flat (carbide tip)	9,5 mm	w/ clamp nut	11,5	Reverse reading	60

Metric

With spindle lock

No.	Range [mm]	Spindle end	Stem Ø	Stem	Fixture thickness for clamp nut [mm]	Special features	Mass [g]
149-183	0-15	Flat (carbide tip)	9,5 mm	Plain		-	55
149-184	0-15	Flat (carbide tip)	9,5 mm	w/ clamp nut	6	-	60
149-803	0-15	Spherical (SR4)	9,5 mm	Plain		-	55
149-804	0-15	Spherical (SR4)	9,5 mm	w/ clamp nut	6	-	60
149-823	0-15	Flat (carbide tip)	9,5 mm	Plain		Reverse reading	55
149-824	0-15	Flat (carbide tip)	9,5 mm	w/ clamp nut	6	Reverse reading	60

Also available! Inch Models

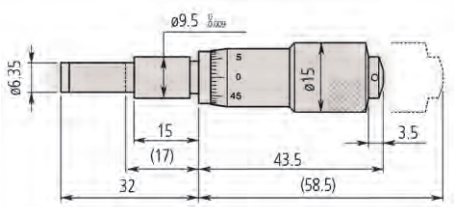

149-132

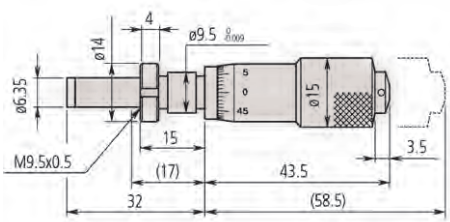

149-131

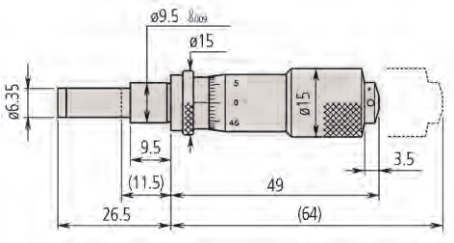

149-183

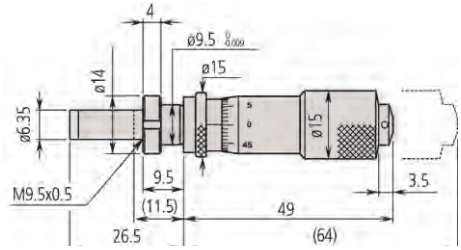

149-184

( ): with spindle full retracted

All products to be sold to commercial customers. Product illustrations are without obligation. Product descriptions, in particular any and all technical specifications, are only binding when explicitly agreed upon. For suggested retail prices, please refer to the separate price list.

Mitutoyo

Micrometer Head 25 mm Range

Series 150 - Medium-sized standard type

These micrometer heads are a standard, medium-size type with a 25mm measuring range.

150-801

150-191

150-195

150-196

Specifications

Accuracy	±2 µm
Scale	Thimble and sleeve satin chrome finish
Graduation	0,01 mm
Spindle pitch	0,5 mm
Measuring surfaces	Carbide tipped

Metric

No.	Range [mm]	Spindle end	Stem Ø	Stem	Fixture thickness for clamp nut [mm]	Special features	Mass [g]
150-192	0-25	Flat (carbide tip)	10 mm	Plain		-	95
150-191	0-25	Flat (carbide tip)	10 mm	w/ clamp nut	11,5	-	100
150-801	0-25	Spherical (SR4)	10 mm	Plain		-	95
150-802	0-25	Spherical (SR4)	10 mm	w/ clamp nut	11,5	-	100
150-190	0-25	Flat (carbide tip)	10 mm	Plain		Graduation 0,001 mm	95
150-189	0-25	Flat (carbide tip)	10 mm	w/ clamp nut	11,5	Graduation 0,001 mm	100
150-196	0-25	Flat (carbide tip)	10 mm	Plain		w/o ratchet stop	95
150-195	0-25	Flat (carbide tip)	10 mm	w/ clamp nut	11,5	w/o ratchet stop	110
150-219	0-25	Flat	10 mm	Plain		Long spindle	95
150-220	0-25	Flat	10 mm	w/ clamp nut	11,5	Long spindle	100
150-821	0-25	Flat (carbide tip)	10 mm	Plain		Reverse reading	95
150-822	0-25	Flat (carbide tip)	10 mm	w/ clamp nut	11,5	Reverse reading	100

Metric

With spindle lock

No.	Range [mm]	Spindle end	Stem Ø	Stem	Fixture thickness for clamp nut [mm]	Special features	Mass [g]
150-209	0-25	Flat (carbide tip)	10 mm	Plain		-	110
150-183	0-25	Flat (carbide tip)	10 mm	Plain		Graduation 0,001 mm	110
150-184	0-25	Flat (carbide tip)	10 mm	w/ clamp nut	11,5	Graduation 0,001 mm	115
150-211	0-25	Flat (carbide tip)	10 mm	Plain		w/o ratchet stop	115
150-210	0-25	Flat (carbide tip)	10 mm	w/ clamp nut	11,5	-	115
150-212	0-25	Flat (carbide tip)	10 mm	w/ clamp nut	11,5	w/o ratchet stop	115
150-803	0-25	Spherical (SR4)	10 mm	Plain		-	110
150-804	0-25	Spherical (SR4)	10 mm	w/ clamp nut	11,5	-	115
150-823	0-25	Flat (carbide tip)	10 mm	Plain		Reverse reading	110
150-824	0-25	Flat (carbide tip)	10 mm	w/ clamp nut	11,5	Reverse reading	115
150-223	0-25	Flat (carbide tip)	10 mm	Plain		Long spindle/ w/o/ratched stop	110
150-224	0-25	Flat (carbide tip)	10 mm	w/ clamp nut	11,5	Long spindle/ w/o/ratched stop	115

Also available!
Inch Models
See Other Catalogue www.mitutoyo.de

All products to be sold to commercial customers. Product illustrations are without obligation. Product descriptions, in particular any and all technical specifications, are only binding when explicitly agreed upon. For suggested retail prices, please refer to the separate price list.

Micrometer Head 25 mm Range

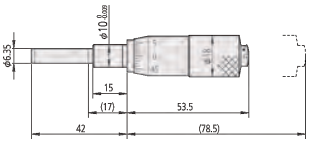

150-196

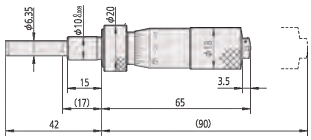

150-211

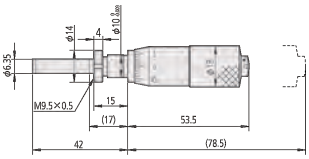

150-195

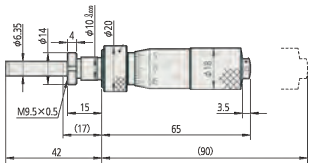

150-212

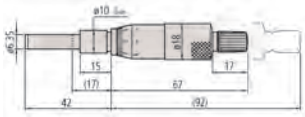

150-192

150-801 150-821 150-190 150-219

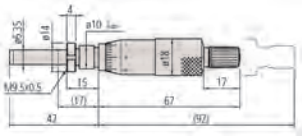

150-191

150-802 150-822 150-189 150-220

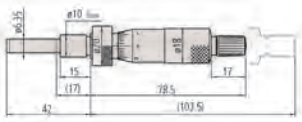

150-209

150-803 150-823 150-183 150-223

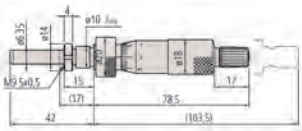

150-210

( ): with spindle full retracted

150-804 150-824 150-184 150-224

All products to be sold to commercial customers. Product illustrations are without obligation. Product descriptions, in particular any and all technical specifications, are only binding when explicitly agreed upon. For suggested retail prices, please refer to the separate price list.

Mitutoyo

Micrometer Head 25 mm and 50 mm Range

Series 151 - Medium-sized standard type with 8 diameter spindle.

These micrometer heads are a medium-sized, standard type.
They offer the following benefits:
- 8mm diameter spindle
- Extremely sturdy micrometer head with or without a ratchet.

151-224

151-223

151-255

151-256

Metric

No.	Range [mm]	Spindle end	Stem Ø	Stem	Fixture thickness for clamp nut [mm]	Special features	Mass [g]
151-224	0-25	Flat (carbide tip)	12 mm	Plain		-	150
151-223	0-25	Flat (carbide tip)	12 mm	w/ clamp nut	25,5	-	155
151-222	0-25	Flat (carbide tip)	12 mm	Plain		Graduation 0,001 mm	150
151-221	0-25	Flat (carbide tip)	12 mm	w/ clamp nut	25,5	Graduation 0,001 mm	155
151-227	0-25	Flat (carbide tip)	12 mm	Plain		w/o ratchet stop	150
151-228	0-25	Flat (carbide tip)	12 mm	w/ clamp nut	25,5	w/o ratchet stop	155
151-256	0-50	Flat (carbide tip)	12 mm	Plain		-	240
151-255	0-50	Flat (carbide tip)	12 mm	w/ clamp nut	25,5	-	250
151-260	0-50	Flat (carbide tip)	12 mm	Plain		w/o ratchet stop	240
151-259	0-50	Flat (carbide tip)	12 mm	w/ clamp nut	25,5	w/o ratchet stop	250

Metric

With spindle lock

No.	Range [mm]	Spindle end	Stem Ø	Stem	Fixture thickness for clamp nut [mm]	Special features	Mass [g]
151-214	0-25	Flat (carbide tip)	12 mm	Plain		-	160
151-213	0-25	Flat (carbide tip)	12 mm	w/ clamp nut	15,5	-	165
151-212	0-25	Flat (carbide tip)	12 mm	Plain		Graduation 0,001 mm	160
151-211	0-25	Flat (carbide tip)	12 mm	w/ clamp nut	15,5	Graduation 0,001 mm	165
151-225	0-25	Flat (carbide tip)	12 mm	Plain		w/o ratchet stop	165
151-226	0-25	Flat (carbide tip)	12 mm	w/ clamp nut	15,5	w/o ratchet stop	165

Also available! Inch Models

Specifications

Accuracy	±2 µm ±4 µm (50 mm)
Scale	Thimble and sleeve satin chrome finish
Graduation	0,01 mm/ 0,001 mm
Spindle pitch	0,5 mm
Measuring surfaces	Carbide tipped

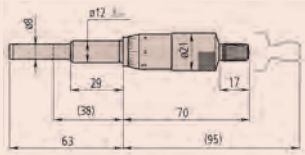

151-224

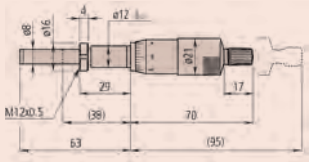

151-223

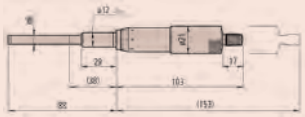

151-256

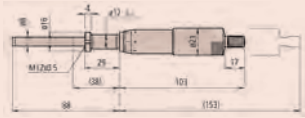

151-255

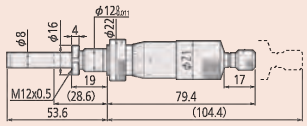

151-213

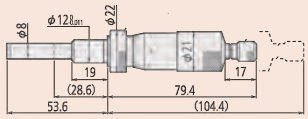

151-214

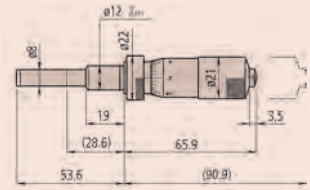

151-225

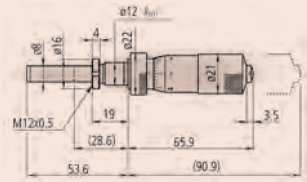

151-226

( ): with spindle full retracted

All products to be sold to commercial customers. Product illustrations are without obligation. Product descriptions, in particular any and all technical specifications, are only binding when explicitly agreed upon. For suggested retail prices, please refer to the separate price list.

Micrometer Heads with Large Thimble

Specifications

Accuracy	0,002 mm
Scale	White anodized aluminium
Spindle pitch	0,5 mm
Measuring surfaces	Carbide tipped

Series 152 - Large thimble type for fine adjustment

These micrometer heads come with a large thimble, allowing you to make fine adjustments. They offer the following benefits:

- Black and red scaling in both directions (152-348/380).
- The large scale drum allows fine graduation and very easy rotation.

152-283

152-348

Metric

No.	Range [mm]	Spindle end	Stem Ø	Accuracy	Stem	Fixture thickness for clamp nut [mm]	Special features	Mass [g]
152-283	0-10	Flat (carbide tip)	12 mm	±2 µm	w/ clamp nut	22,5	-	190
152-332	0-25	Flat (carbide tip)	12 mm	±2 µm	Plain		-	310
152-348	0-25	Flat (carbide tip)	12 mm	±2 µm	Plain		Bidirectional graduation	310
152-380	0-50	Flat (carbide tip)	12 mm	±4 µm	Plain		Bidirectional graduation	460

Also available! Inch Models

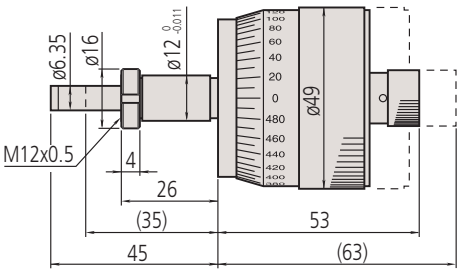

152-283

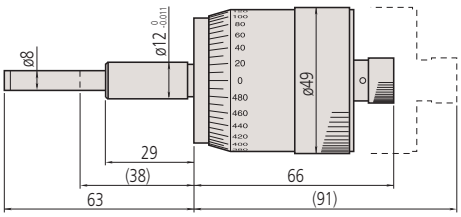

152-332

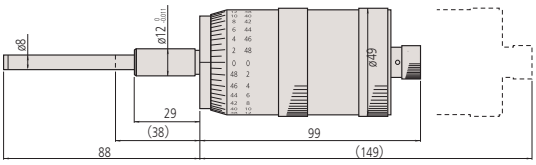

152-380

( ): with spindle full retracted

All products to be sold to commercial customers. Product illustrations are without obligation. Product descriptions, in particular any and all technical specifications, are only binding when explicitly agreed upon. For suggested retail prices, please refer to the separate price list.

Micrometer Head for XY-Stage

Series 152 - XY Stage type

These XY Stage type micrometer heads let you read measurement values easily.
They offer the following benefits:

- Micrometer head with rotating spindle, non-rotating measuring surface and bidirectional reading 152-390/389.
- Graduations for each direction are engraved in a different colour (black or red).
- You can read measurement values directly from the 100-step graduation thimble without having to consider 1/2mm values, reducing the chance of error.

152-390

152-402

Specifications

Accuracy	±2 µm
Scale	White anodized aluminium
Graduation	0,005 (152-390, 152-389) 0,001 (152-402, 152-401)
Spindle pitch	1 mm
Measuring surfaces	Hardened steel (>60HRC) 152-390, 152-389, 152-392, 152-391 Carbide tipped 152-402, 152-401

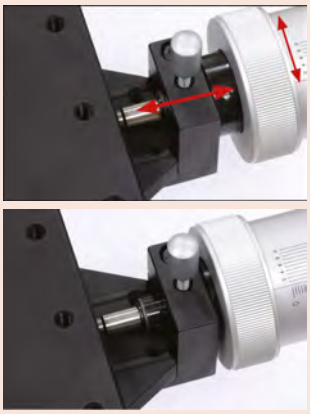

152-402, 152-401

The zero point setting ring allows spindle travel without changing the scale drum position, thus simplifying zero point setting.

Metric

No.	Range [mm]	Spindle end	Stem Ø	Stem	Special features	Mass [g]
152-390	0-25	Flat (hardened) with non-rotating device	18 mm	Plain	For X-axis Bidirectional grad.	270
152-389	0-25	Flat (hardened) with non-rotating device	18 mm	Plain	For Y-axis Bidirectional grad.	270
152-402	0-25	Spherical with carbide tip (SR10)	18 mm	Plain	For X-axis	460
152-401	0-25	Spherical with carbide tip (SR10)	18 mm	Plain	For Y-axis	460

Also available! Inch Models

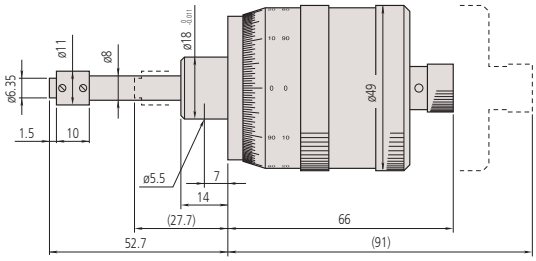

152-390

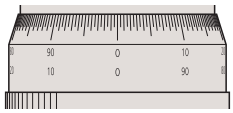

152-389

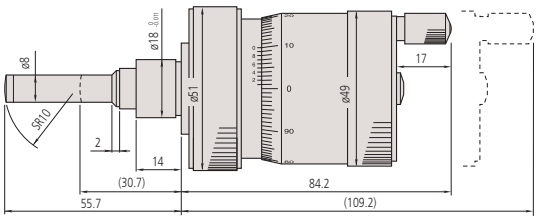

152-402
( ): with spindle full retracted

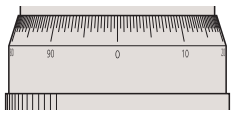

152-401

All products to be sold to commercial customers. Product illustrations are without obligation. Product descriptions, in particular any and all technical specifications, are only binding when explicitly agreed upon. For suggested retail prices, please refer to the separate price list.

Quick Spindle Feed Micrometer Head

Specifications

Scale	Thimble and sleeve satin chrome finish
Graduation	0,01mm
Spindle pitch	1 mm
Measuring surfaces	Carbide tipped

Series 152 - Quick spindle feed of 1/rev

This is a quick spindle micrometer head.

It offers you the following benefits:
– Micrometer head with 1 mm / rotation

152-102

152-103

Metric

No.	Range [mm]	Spindle end	Stem Ø	Accuracy [µm]	Stem	Mass [g]
152-101	0-15	Flat (carbide tip)	12 mm	±2	Plain	205
152-102	0-25	Flat (carbide tip)	12 mm	±2	Plain	230
152-103	0-50	Flat (carbide tip)	12 mm	±4	Plain	355

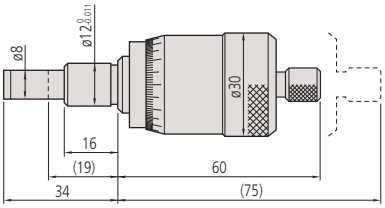

152-101

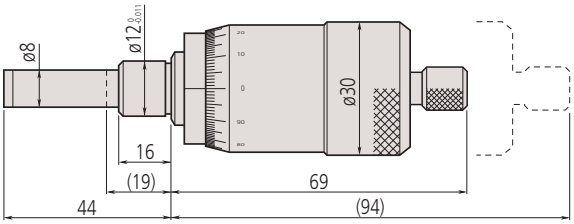

152-102

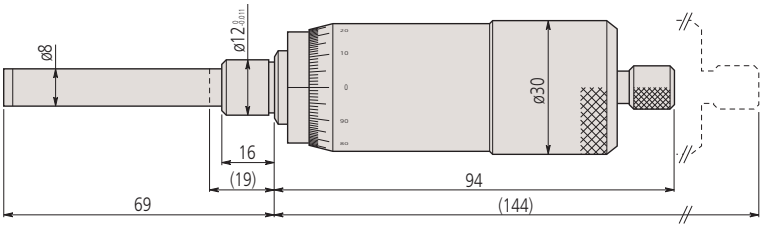

152-103

( ): with spindle full retracted

All products to be sold to commercial customers. Product illustrations are without obligation. Product descriptions, in particular any and all technical specifications, are only binding when explicitly agreed upon. For suggested retail prices, please refer to the separate price list.

Mitutoyo

Micrometer Head with Non-Rotating Spindle

Series 110 - Differential screw translator (Extra-fine feed) type

This is a differential screw translator (extra-fine feed) type of micrometer head.
It offers you the following benefits:
- Micrometer head with ultra-fine rate of travel.
- With its non-rotating spindle it is particularly suited to fine adjustments.
- The differential travel mechanism with double spindle enables ultra-sensitive travel

110-102

110-502

Metric

No.	Range	Graduation	Spindle end	Stem Ø	Stem	Fixture thickness for clamp nut [mm]	Mass [g]
110-105	0 - 1	0,001 mm	Flat (carbide tip)	12 mm	w/ clamp nut	9,5	150
110-106	0 - 1	0,0001 mm	Flat (carbide tip)	12 mm	w/ clamp nut	9,5	150
110-107	0 - 1	0,001 mm	Spherical (SR10)	12 mm	w/ clamp nut	9,5	150
110-108	0 - 1	0,0001 mm	Spherical (SR10)	12 mm	w/ clamp nut	9,5	150
110-101	0 - 2,5	0,001 mm	Flat (carbide tip)	12 mm	w/ clamp nut	9,5	150
110-102	0 - 2,5	0,0001 mm	Flat (carbide tip)	12 mm	w/ clamp nut	9,5	150
110-502	A: 0-13 B: 0-0,2	A: 0,01 mm B: 0,0005mm	Spherical (SR3)	9,5 mm	w/ clamp nut	11,5	100

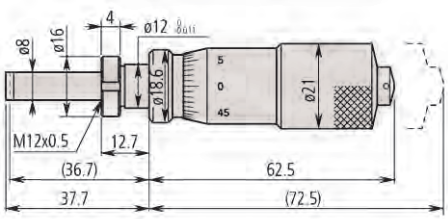

110-105
110-106

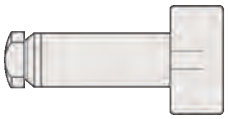

110-107
110-108

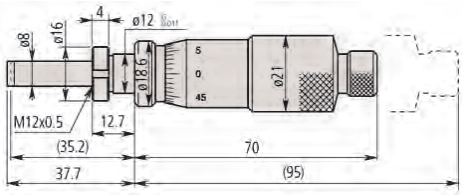

110-101
110-102

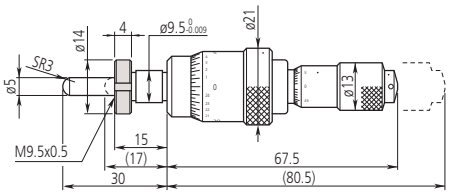

110-502

(): with spindle full retracted

Specifications

Accuracy	±3 µm (1 mm) ±5 µm (2,5 mm) ±3 µm (13 mm)
Scale	Thimble and sleeve satin chrome finish
Measuring surfaces	Carbide tipped

Version with non-rotating spindle

Version with rotating spindle
110-502

All products to be sold to commercial customers. Product illustrations are without obligation. Product descriptions, in particular any and all technical specifications, are only binding when explicitly agreed upon. For suggested retail prices, please refer to the separate price list.

Micrometer Head with Non-Rotating Spindle

Series 153

Specifications

Accuracy	±3 µm
Scale	Thimble and sleeve satin chrome finish
Spindle pitch	0,5 mm
Measuring surfaces	Carbide tipped

Version with non-rotating spindle

153-101

153-203

153-201

Metric

No.	Range [mm]	Graduation	Spindle end	Stem Ø	Stem	Special features	Mass [g]
153-101	0-15	0,01 mm	Flat (carbide tip)	9,5 mm	Plain		70
153-203	0-25	0,01 mm	Flat (carbide tip)	12 mm	Plain		125
153-204	0-25	0,001 mm	Flat (carbide tip)	12 mm	Plain	Graduation with vernier	125

Metric

With ratchet stop

No.	Range [mm]	Graduation	Spindle end	Stem Ø	Stem	Special features	Mass [g]
153-201	0-25	0,01 mm	Flat (carbide tip)	12 mm	Plain		125
153-202	0-25	0,001 mm	Flat (carbide tip)	12 mm	Plain	Graduation with vernier	125

Also available! Inch Models

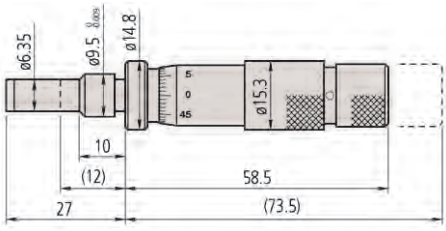

153-101

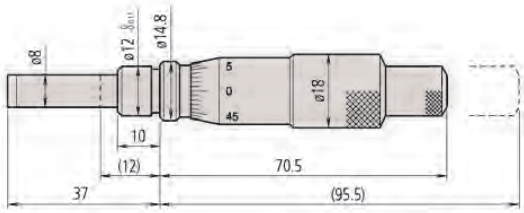

153-203 + 153-204

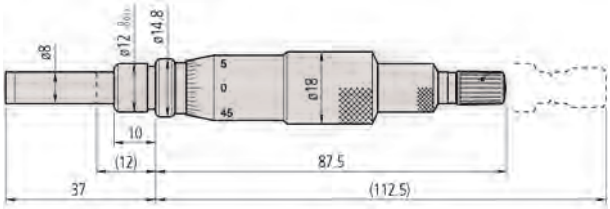

153-201 + 153-202

( ): with spindle full retracted

All products to be sold to commercial customers. Product illustrations are without obligation. Product descriptions, in particular any and all technical specifications, are only binding when explicitly agreed upon. For suggested retail prices, please refer to the separate price list.

Mitutoyo

Micrometer Head with Non-Rotating Spindle

Series 197 - Non-rotating spindle and large thimble

- Micrometer Head with non-rotating spindle and 1 mm spindle pitch.
- Measurement values can be read directly from the 100-step graduation thimble without the complication of having to consider 1/2 mm values, which simplifies reading and therefore reduces the chance of error.
- The scale is set to zero by rotating the barrel.

197-101

Metric

No.	Range [mm]	Spindle end	Stem Ø	Stem	Special features	Mass [g]
197-101	0-50	Flat (carbide tip)	18 mm	Plain	Bidirectional graduation	300

Specifications

Accuracy	±5 µm
Scale	White anodized aluminium
Spindle pitch	1 mm
Measuring surfaces	Carbide tipped

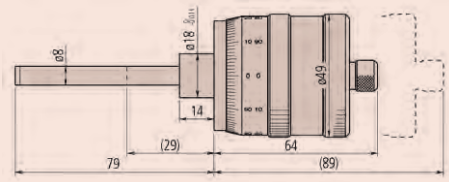

197-101

Series 153 - Fine graduation and high accuracy

- Extra-large-diameter micrometer head with non-rotating spindle.

153-301

Metric

No.	Range [mm]	Spindle end	Stem Ø	Stem	Special features	Mass [g]
153-301	0-25	Flat (carbide tip)	18 mm	Plain	Bidirectional graduation	750

Specifications

Accuracy	±1 µm
Scale	White anodized aluminium
Spindle pitch	0,5 mm
Measuring surfaces	Carbide tipped

Also available! Inch Models

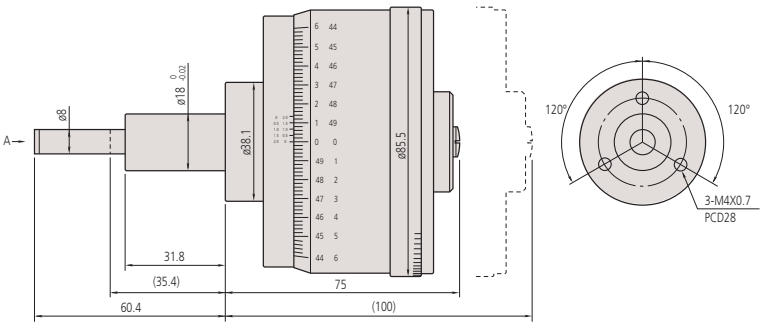

153-301

All products to be sold to commercial customers. Product illustrations are without obligation. Product descriptions, in particular any and all technical specifications, are only binding when explicitly agreed upon. For suggested retail prices, please refer to the separate price list.

Fixtures for Micrometer Head

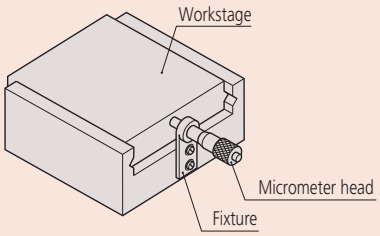

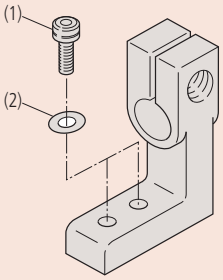

Fixtures for use with plain stem type micrometer heads are split, and clamp the stem by tightening a socket head screw (M3x0.5x12 mm).

Mitutoyo offers various types of fixture designed for micrometer heads, which you can use for a wide range of applications, that have the following benefits:

- These fixtures are high quality and durable, manufactured from nickel-plated cast iron.
- Two types of fixture for micrometer heads are available, depending on whether the head has a plain stem or is a clamp nut type.

Fixtures for micrometer heads with clamp nut

No.	A [mm]	B [mm]	C [mm]	D [mm]	E [mm]	F [mm]	G [mm]	H [mm]	I [mm]	J [mm]	K [mm]	L [mm]
303559	9,5	6	15	20	24	5	11	8	0,5	27,5	3,4	
303568	9,5	11,5	20	30	35	7	16	12	1,75	40	4,5	
303578	10	11,5	20	30	35	7	16	12	1,75	40	4,5	
303563	9,5	6	30	37,5	4,5	15	10	15	3,4			
303572	9,5	11,5	40	50	6,5	18	15	20	4,5			
303582	10	11,5	40	50	6,5	18	15	20	4,5			
303561	9,5	6	40	3,5	30	15	3,4					
303570	9,5	11,5	60	5,5	40	20	4,5					
303580	10	11,5	60	5,5	40	20	4,5					
303565	9,5	6	15	15	25	8,5	7,5	10	10	27,5	3,4	0,75
303574	9,5	11,5	15	20	40	8,5	10	20	15	35	4,5	1,25
303584	10	11,5	15	20	40	8,5	10	20	15	35	4,5	1,25

Fixtures for plain stem type micrometer heads

No.	A [mm]	B [mm]	C [mm]	D [mm]	E [mm]	F [mm]	G [mm]	H [mm]	I [mm]	J [mm]	K [mm]	L [mm]	M [mm]
303560	9,5	9	15	20	23	5	11	8	1,5	32,5	4,5	ø3,4	M3x0,5
303569	9,5	14,5	20	30	35	7	16	12	3,25	42,5	7,25	4,5	M3x0,5
303579	10	14,5	20	30	35	7	16	12	3,25	42,5	7,25	4,5	M3x0,5
303564	9,5	9	30	42,5	4	15	10	15	4,5	3,4	M3x0,5		
303573	9,5	14,5	40	52,5	6	18	15	20	7,25	4,5	M3x0,5		
303583	10	14,5	40	52,5	6	18	15	20	7,25	4,5	M3x0,5		
303562	9,5	9	15	20	40	3	30	15	3,4	M3x0,5			
303571	9,5	14,5	15	22,5	60	5	40	20	4,5	M3x0,5			
303581	10	14,5	15	22,5	60	5	40	20	4,5	M3x0,5			
303566	9,5	9	15	15	25	8,5	7,5	10	10	32,5	4,5	3,4	M3x0,5
303575	9,5	14,5	15	20	40	8,5	10	20	15	40	7,25	4,5	M3x0,5
303585	10	14,5	15	20	40	8,5	10	20	15	40	7,25	4,5	M3x0,5

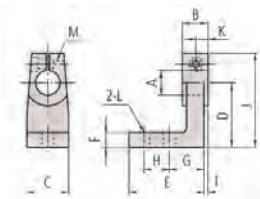

303560/69/79

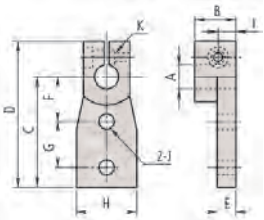

303564/73/83

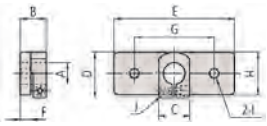

303562/71/81

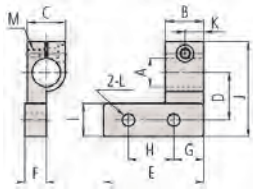

303566/75/85

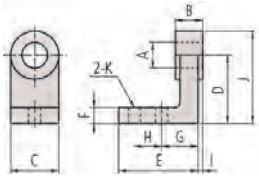

303559/68/78

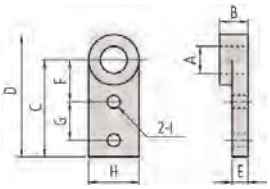

303563/72/82

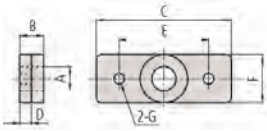

303561/70/80

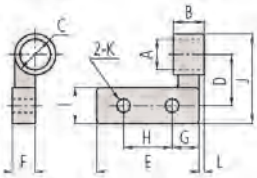

303565/74/84

All products to be sold to commercial customers. Product illustrations are without obligation. Product descriptions, in particular any and all technical specifications, are only binding when explicitly agreed upon. For suggested retail prices, please refer to the separate price list.

Mitutoyo

Inside Micrometer
Page 129

Bore Gauges
Page 151

Inside Measuring Instruments Accessories
Page 164

All products to be sold to commercial customers. Product illustrations are without obligation. Product descriptions, in particular any and all technical specifications, are only binding when explicitly agreed upon. For suggested retail prices, please refer to the separate price list.

Digimatic Holtest Individual

Functions	Series 468
ZERO/ABS	●
Auto Power OFF after 20 min. non use	●
2 x PRESET	●
Low voltage alarm	●
Function lock	●
Data output	●
HOLD	●

Specifications

Accuracy	6-20 mm : ±2 µm 20-100 mm : ±3 µm 100-300 : ±5 µm (excluding quantizing error) - The given values require close contact of the measuring surfaces.
Digital step	0,001 mm
Measuring pins	Titanium coated tungsten carbide (6-12 mm) Titanium coated hardened steel (12-300 mm) Taper: tungsten carbide
Battery life	approx. 1,2 years
Display	LCD, character height 7,5 mm
Delivered	Including box, key, 1 battery, certificate of inspection

Optional accessories

No.	Description
04AZB157	Holder for Micrometer Stand, for Series 468
156-101-10	Micrometer Stand, Adjustable Angle Type, for Micrometer 0-100mm
264-504-5D	Statistic Processing Printer DP-1VR, CEE Type
Cables	
05CZA662	Digimatic Cable with Data Button IP Type, 1m, Micrometer Type
05CZA663	Digimatic Cable with Data Button IP Type, 2m, Micrometer Type
06ADV380B	USB Input Tool Direct (Digimatic USB), with Data Button IP Micrometer Type
02AZD790B	U-WAVE T Connection Cable B, with Data Button IP Micrometer Type
Extensions	
952322	Holtest, Boremetic Extension 100mm, 6-12mm
952621	Holtest, Boremetic Extension 150mm, 12-20mm
952622	Holtest, Boremetic Extension 150mm, 20-50mm
952623	Holtest, Boremetic Extension 150mm, 50-300mm

Consumable spares

No.	Description
938882	Battery SR44 1.5V

Series 468

These are three-point internal micrometers that offer you the following benefits:

- Individual micrometer.
- Titanium-coated measuring pins give you excellent durability and impact resistance.
- They also have excellent resistance against water and dust (IP65 protection level), allowing you to use this product in machining situations that include splashing coolant fluid.
- Large LCD display with character height of 7,5mm enables you to read measurements easily.
- Without setting rings or extensions.

Titanium coated measuring surfaces for durability

Metric

No.	Range [mm]	Mass [g]
468-161	6-8	370
468-162	8-10	370
468-163	10-12	370
468-164	12-16	400
468-165	16-20	400
468-166	20-25	470
468-167	25-30	480
468-168	30-40	480
468-169	40-50	500
468-170	50-63	620
468-171	62-75	630
468-172	75-88	960
468-173	87-100	970
468-174	100-125	940
468-175	125-150	1030
468-176	150-175	1120
468-177	175-200	1210
468-178	200-225	1300
468-179	225-250	1390
468-180	250-275	1480
468-181	275-300	1570

Also available! Inch/Metric Models

All products to be sold to commercial customers. Product illustrations are without obligation. Product descriptions, in particular any and all technical specifications, are only binding when explicitly agreed upon. For suggested retail prices, please refer to the separate price list.

Digimatic Holtest Individual

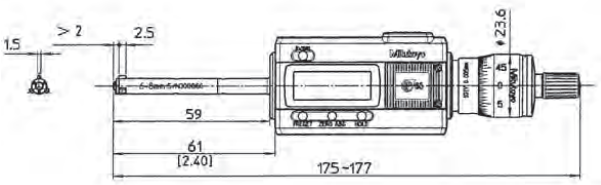

468-161, 468-162, 468-163

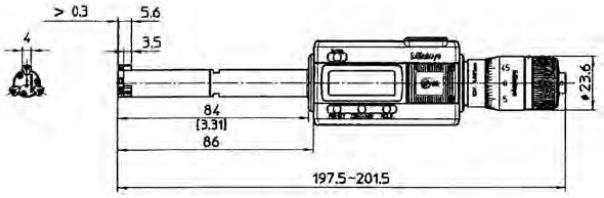

468-164, 468-165

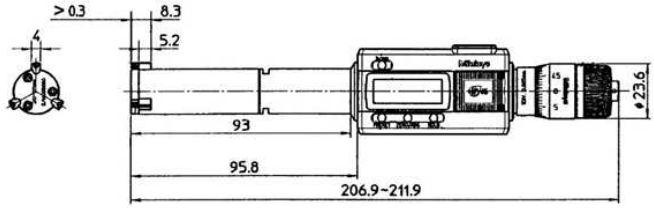

468-166, 468-167

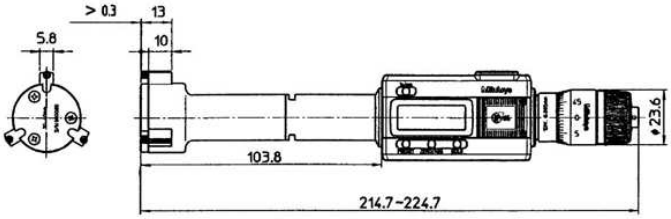

468-168, 468-169

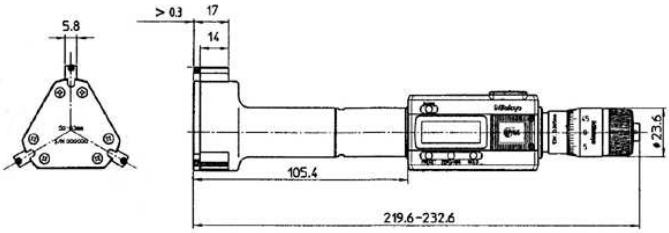

468-170, 468-171, 468-172, 468-173

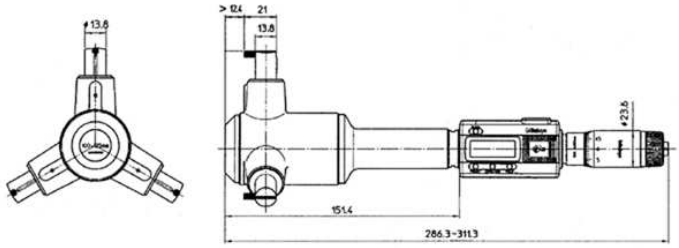

468-174, 468-175, 468-176, 468-177, 468-178, 468-179, 468-180, 468-181

Holtest with optional accessories
Stand 156-101-10
Printer DP1-VR 264-504-5D
Holder 04AZB157
Cable 05CZA662

04AZB157

Extension rod for deep holes

All products to be sold to commercial customers. Product illustrations are without obligation. Product descriptions, in particular any and all technical specifications, are only binding when explicitly agreed upon. For suggested retail prices, please refer to the separate price list.

Digimatic Holtest Interchangeable Head Set

Functions	Series 468
ZERO/ABS	●
Auto Power OFF after 20 min. non use	●
2 x PRESET	●
Low voltage alarm	●
Function lock	●
Data output	●
HOLD	●

Specifications

Accuracy	6-20 mm : ±2 µm 20-100 mm : ±3 µm 100-200 mm : ±5 µm (excluding quantizing error) - The given value require close contact of the measuring surfaces.
Digital step	0,001 mm
Measuring pins	Titanium coated tungsten carbide (6-12 mm) Titanium coated hardened steel (12-200 mm) Taper: tungsten carbide
Battery life	approx. 1,2 years
Display	LCD, character height 7,5 mm
Delivered	Including box, key, 1 battery, setting ring, extension, certificate of inspection

Optional accessories

No.	Description
156-101-10	Micrometer Stand, Adjustable Angle Type, for Micrometer 0-100mm
04AZB157	Holder for Micrometer Stand, for Series 468
Cables	
05CZA662	Digimatic Cable with Data Button IP Type, 1m, Micrometer Type
05CZA663	Digimatic Cable with Data Button IP Type, 2m, Micrometer Type
06ADV380B	USB Input Tool Direct (Digimatic USB), with Data Button IP Micrometer Type
02AZD790B	U-WAVE T Connection Cable B, with Data Button IP Micrometer Type
Extensions	
952322	Holtest, Borematic Extension 100mm, 6-12mm
952621	Holtest, Borematic Extension 150mm, 12-20mm
952622	Holtest, Borematic Extension 150mm, 20-50mm
952623	Holtest, Borematic Extension 150mm, 50-300mm

Consumable spares

No.	Description
938882	Battery SR44 1.5V

04AZB157

Extension

Series 468

These are three-point internal micrometers that offer you the following benefits:

- Interchangeable head set.
- Titanium-coated measuring pins give you excellent durability and impact resistance.
- They also have excellent resistance against water and dust (IP65 protection level), allowing you to use this product in machining situations that include splashing coolant fluid.
- Large LCD display with character height of 7,5mm enables you to read measurements easily.
- With setting rings and extensions.

468-973

Titanium coated measuring surfaces for durability

Metric

No.	Range [mm]	Remarks	Individual ranges [mm]	Setting rings included	Mass [g]
468-971	6-12	100 mm extension	6-8, 8-10, 10-12	ø8 mm (177-125) ø10 mm (177-126)	420
468-972	12-20	150 mm extension	12-16, 16-20	ø16 mm (177-177)	560
468-973	20-50	150 mm extension	20-25, 25-30, 30-40, 40-50	ø25 mm (177-139) ø40 mm (177-290)	1170
468-974	50-100	150 mm extension	50-63, 62-75, 75-88, 87-100	ø62 mm (177-314) ø87 mm (177-318)	2420
468-975	100-200	150 mm extension	100-125, 125-150, 150-175, 175-200	ø125 mm (177-298) ø175 mm (177-302)	3540

Also available! Inch/Metric Models

Holtest with optional accessories
156-101-10, 264-504-5D, 04AZB157, 05CZA662

All products to be sold to commercial customers. Product illustrations are without obligation. Product descriptions, in particular any and all technical specifications, are only binding when explicitly agreed upon. For suggested retail prices, please refer to the separate price list.

Digimatic Holtest Complete Unit Set

Series 468

These are three-point internal micrometers that offer you the following benefits:
- Complete unit set.
- Titanium-coated measuring pins give you excellent durability and impact resistance.
- They also have excellent resistance against water and dust (IP65 protection level), allowing you to use this product in machining situations that include splashing coolant fluid.
- Large LCD display with character height of 7,5mm enables you to read measurements easily.
- With setting rings but without extensions.

468-983

Titanium coated measuring surfaces for durability

Metric

Measuring surfaces titanium coated. Carbide taper and contact points.

No.	Range [mm]	Individual ranges	Models included	Setting rings included	Mass [g]
468-981	6-12	6-8, 8-10, 10-12 mm	468-161 / 468-162 / 468-163	ø8 mm (177-125) ø10 mm (177-126)	1160
468-982	12-25	12-16, 16-20, 20-25 mm	468-164 / 468-165 / 468-166	ø16 mm (177-177) ø20 mm (177-286)	1290
468-983	25-50	25-30, 30-40, 40-50 mm	468-167 / 468-168 / 468-169	ø30 mm (177-288) ø40 mm (177-290)	1480
468-984	50-75	50-63, 62-75 mm	468-170 / 468-171	ø62 mm (177-314)	1270
468-985	75-100	75-88, 87-100 mm	468-172 / 468-173	ø87 mm (177-318)	1990

Also available! Inch/Metric Models

Functions	Series 468
ZERO/ABS	●
Auto Power OFF after 20 min. non use	●
2 x PRESET	●
Low voltage alarm	●
Function lock	●
Data output	●
HOLD	●

Specifications

Accuracy	6-20 mm : ±2 µm 20-100 mm : ±3 µm (excluding quantizing error) - The given values require close contact of the measuring surfaces.
Digital step	0,001 mm
Measuring pins	Titanium coated tungsten carbide (6-12 mm) Titanium coated hardened steel (12-100 mm) Taper: tungsten carbide
Battery life	approx. 1,2 years
Display	LCD, character height 7,5 mm
Delivered	Including box, key, 1 battery, setting ring, certificate of inspection

Optional accessories

No.	Description
04AZB157	Holder for Micrometer Stand, for Series 468
156-101-10	Micrometer Stand, Adjustable Angle Type, for Micrometer 0-100mm
Cables	
05CZA662	Digimatic Cable with Data Button IP Type, 1m, Micrometer Type
05CZA663	Digimatic Cable with Data Button IP Type, 2m, Micrometer Type
06ADV380B	USB Input Tool Direct (Digimatic USB), with Data Button IP Micrometer Type
02AZD790B	U-WAVE T Connection Cable B, with Data Button IP Micrometer Type
Extensions	
952322	Holtest, Boremat Extension 100mm, 6-12mm
952621	Holtest, Boremat Extension 150mm, 12-20mm
952622	Holtest, Boremat Extension 150mm, 20-50mm
952623	Holtest, Boremat Extension 150mm, 50-300mm

Consumable spares

No.	Description
938882	Battery SR44 1.5V

04AZB157

Extension

All products to be sold to commercial customers. Product illustrations are without obligation. Product descriptions, in particular any and all technical specifications, are only binding when explicitly agreed upon. For suggested retail prices, please refer to the separate price list.

Holtest Metric

Series 368

These are metric three-point and two-point internal micrometers that offer you the following benefits:

- Individual micrometer.
- Titanium-coated measuring pins (> 6mm range) give you excellent durability and impact resistance.
- Three-point micrometer (> 6mm range) allows stable measurement through automatic centring.
- Without setting rings or extensions.

Specifications

Accuracy	2-20 mm : ±2 µm 20-100 mm : ±3 µm 100-300 mm : ±5 µm
Graduation	up to 12 mm: 0,001 mm over 12 mm: 0,005 mm
Scale	Thimble and sleeve satin chrome finish, Up to 12 mm : ø17 mm Over 12 mm : ø23 mm
Measuring Surface/Pins	2 - 6 mm: carbide 6 - 12 mm: titanium coated tungsten carbide 12 - 300 mm: titanium coated hardened steel taper: tungsten carbide
Measuring spindle	Spindle pitch 0,5 mm
Measuring method	2-6 mm : 2-point 6-300 mm : 3-point
Delivered	Including box, key, certificate of inspection

Optional accessories

No.	Description
952621	Holtest, Borematic Extension 150mm, 12-20mm
952622	Holtest, Borematic Extension 150mm, 20-50mm
952623	Holtest, Borematic Extension 150mm, 50-300mm
952322	Holtest, Borematic Extension 100mm, 6-12mm

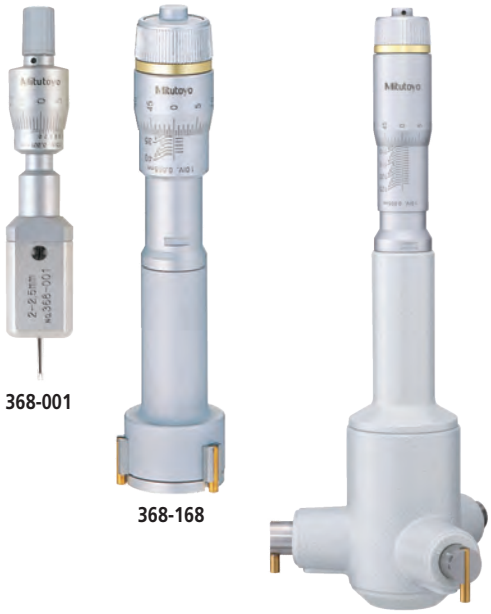

368-001 368-168 368-174

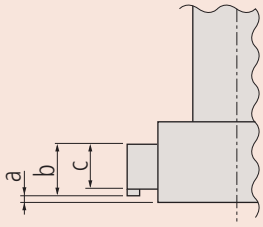

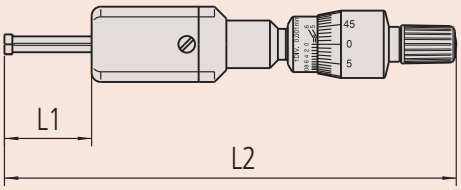

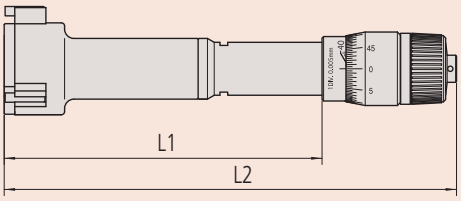

Metric

No.	Range [mm]	L1 [mm]	L2 [mm]	a [mm]	b [mm]	c [mm]	Mass [g]
368-001	2-2,5	12	103,5-104			2	88
368-002	2,5-3	12	103,5-104			2	88
368-003	3-4	22	113-114			2	91
368-004	4-5	22	113-114			2	91
368-005	5-6	22	113-114			2	91
368-161	6-8	59	102-104	2		2,5	60
368-162	8-10	59	102-104	2		2,5	60
368-163	10-12	59	102-104	2		2,5	60
368-164	12-16	82	126-130	0,3	5,6	3,5	150
368-165	16-20	82	126-130	0,3	5,6	3,5	160
368-166	20-25	94	126-130	0,3	8,3	5,2	260
368-167	25-30	94	137-142	0,3	8,3	5,2	280
368-168	30-40	102	145-155	0,3	13	10	290
368-169	40-50	102	145-155	0,3	13	10	330
368-170	50-63	105	150-163	0,3	17	14	440
368-171	62-75	105	150-163	0,3	17	14	450
368-172	75-88	105	150-165	0,3	17	14	570
368-173	87-100	105	150-165	0,3	17	14	580
368-174	100-125	161	227-252	12,4	21	13,8	1030
368-175	125-150	161	227-252	12,4	21	13,8	1120
368-176	150-175	161	227-252	12,4	21	13,8	1210
368-177	175-200	161	227-252	12,4	21	13,8	1320
368-178	200-225	161	227-252	12,4	21	13,8	1430
368-179	225-250	161	227-252	12,4	21	13,8	1550
368-180	250-275	161	227-252	12,4	21	13,8	1700
368-181	275-300	161	227-252	12,4	21	13,8	1870

All products to be sold to commercial customers. Product illustrations are without obligation. Product descriptions, in particular any and all technical specifications, are only binding when explicitly agreed upon. For suggested retail prices, please refer to the separate price list.

Holtest Set

Series 368

This is a set of three-point and two-point internal micrometers that offers you the following
benefits:

- Complete unit set.
- Carbide measuring surface (2-6mm range)
- Titanium-coated measuring pins (> 6mm range) give you excellent durability and impact resistance.
- With setting rings and extensions, except for models 368-906/07 which are supplied with setting rings only.

368-914

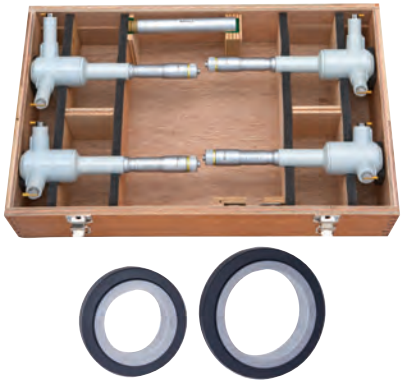

368-915

Metric

No.	Range [mm]	Individual ranges	Models included	Setting rings included	Extension rod	Mass [g]
368-906	2-3	2-2,5, 2,5-3 mm	368-001 / 368-002	ø2,5 mm (177-208)		310
368-907	3-6	3-4, 4-5, 5-6 mm	368-003 / 368-004 / 368-005	ø4 mm (177-204) ø5 mm (177-205)		505
368-911	6-12	6-8, 8-10, 10-12 mm	368-161 / 368-162 / 368-163	ø8 mm (177-125) ø10 mm (177-126)	952322	180
368-912	12-20	12-16, 16-20 mm	368-164 / 368-165	ø16 mm (177-177)	952621	280
368-913	20-50	20-25, 25-30, 30-40, 40-50 mm	368-166 / 368-167 / 368-168 / 368-169	ø25 mm (177-139) ø40 mm (177-290)	952622	960
368-914	50-100	50-63, 62-75, 75-88, 87-100 mm	368-170 / 368-171 / 368-172 / 368-173	ø62 mm (177-314) ø87 mm (177-318)	952623	2030
368-915	100-200	100-125, 125-150, 150-175, 175-200 mm	368-174 / 368-175 / 368-176 / 368-177	ø125 mm (177-298) ø175 mm (177-302)	952623	4680

Also available!
Inch Models
Quick Order Catalogue www.mitutoyo.eu

Specifications

Accuracy	2-20 mm : 2 µm 20-100 mm : 3 µm 100-300 mm : 5 µm
Graduation	0,001 mm. 0,005 mm (models over 12 mm)
Scale	Thimble and sleeve satin chrome finish, Up to 12 mm : ø17 mm Over 12 mm : ø23 mm
Measuring method	2-6 mm 2-point 6-200 mm 3-point
Delivered	Including box, key, setting ring, extension, certificate of inspection

368-906

368-907

368-911

368-912

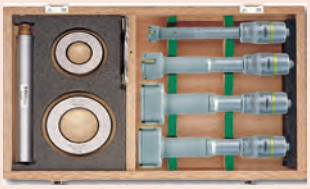

368-913

All products to be sold to commercial customers. Product illustrations are without obligation. Product descriptions, in particular any and all technical specifications, are only binding when explicitly agreed upon. For suggested retail prices, please refer to the separate price list.

Economy Holtest

Series 368

This is an economy version of a three-point internal micrometer, that offers you the following benefits:

- Hardened tool steel anvils and tapers allow a more economically priced and affordable tool.
- Individual types without setting rings or extensions.

Specifications

Accuracy	12-20 mm : ±2 µm 20-100 mm : ±3 µm 100-300 mm : ±5 µm
Graduation	0,005 mm
Scale	Thimble and sleeve satin chrome finish, Up to 12 mm : Ø17 mm Over 12 mm : Ø23 mm
Measuring surfaces	hardened steel Taper: hardened steel
Measuring spindle	Spindle pitch 0,5 mm
Measuring method	3-point
Delivered	Including box, key, certificate of inspection

Optional accessories

No.	Description
952621	Holtest, Borematic Extension 150mm, 12-20mm
952622	Holtest, Borematic Extension 150mm, 20-50mm
952623	Holtest, Borematic Extension 150mm, 50-300mm

368-769

368-770

368-774

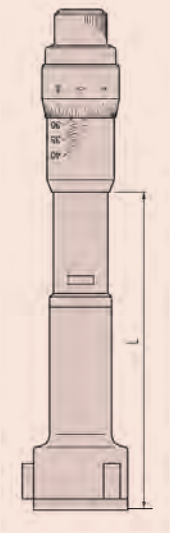

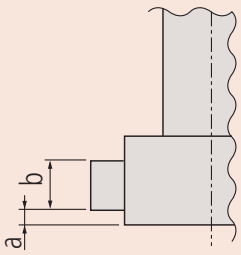

Metric

No.	Range [mm]	L [mm]	a [mm]	b [mm]	Mass [g]
368-764	12-16	82	2,6	3,5	150
368-765	16-20	82	2,6	3,5	150
368-766	20-25	94	3,4	5,2	260
368-767	25-30	94	3,4	5,2	280
368-768	30-40	102	3,4	10	290
368-769	40-50	102	3,4	10	330
368-770	50-63	105	3,4	14	440
368-771	62-75	105	3,4	14	450
368-772	75-88	105	3,4	14	560
368-773	87-100	105	3,4	14	570
368-774	100-125	161	19,6	13,8	1020
368-775	125-150	161	19,6	13,8	1110
368-776	150-175	161	19,6	13,8	1200
368-777	175-200	161	19,6	13,8	1300
368-778	200-225	161	19,6	13,8	1420
368-779	225-250	161	19,6	13,8	1540
368-780	250-275	161	19,6	13,8	1690
368-781	275-300	161	19,6	13,8	1860

Also available! Inch Models

All products to be sold to commercial customers. Product illustrations are without obligation. Product descriptions, in particular any and all technical specifications, are only binding when explicitly agreed upon. For suggested retail prices, please refer to the separate price list.

Economy Holtest Set

Series 368

This is an economy version of a three-point internal micrometer, that offers you the following benefits:

- Hardened tool steel anvils and tapers allow a more economically priced and affordable tool.
- Individual types without setting rings or extensions.
- Sets with setting rings and extensions.

368-991

368-992

368-993

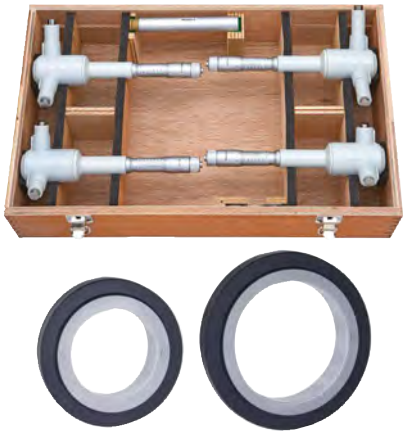

368-994

Specifications

Accuracy	12-20 mm : ±2 µm 20-100 mm : ±3 µm 100-300 mm : ±5 µm
Graduation	up to 12 mm: 0,001 mm over 12 mm: 0,005 mm
Scale	Thimble and sleeve satin chrome finish, Up to 12 mm : Ø17 mm Over 12 mm : Ø23 mm
Delivered	Including box, key, setting ring, extension, certificate of inspection

Optional accessories

No.	Description
952621	Holtest, Borematic Extension 150mm, 12-20mm
952622	Holtest, Borematic Extension 150mm, 20-50mm
952623	Holtest, Borematic Extension 150mm, 50-300mm

Extension

Metric

No.	Range [mm]	Individual ranges	Models included	Setting rings included	Extension rod	Mass [g]
368-991	12-20	12-16, 16-20 mm	368-764 / 368-765	ø16 mm (177-177)	952621	310
368-992	20-50	20-25, 25-30, 30-40, 40-50 mm	368-766 / 368-767 368-768 / 368-769	ø25 mm (177-139) ø40 mm (177-290)	952622	1160
368-993	50-100	50-63, 62-75, 75-88, 87-100 mm	368-770 / 368-771 / 368-772 / 368-773	ø62 mm (177-314) ø87 mm (177-318)	952623	2020
368-994	100-200	100-125, 125-150, 150-175, 175-200 mm	368-774 / 368-775 / 368-776 / 368-777	ø125 mm (177-298) ø175 mm (177-302)	952623	4630

Also available! Inch Models

All products to be sold to commercial customers. Product illustrations are without obligation. Product descriptions, in particular any and all technical specifications, are only binding when explicitly agreed upon. For suggested retail prices, please refer to the separate price list.

ABSOLUTE Borematic

Functions	Series 568
ZERO/ABS	●
GO/±NG judgement	●
ON/OFF	●
DATA/HOLD	●
2 x PRESET	●
Function lock	●
Data output	●

Specifications

Accuracy	6-20 mm : ±5 µm 20-125 mm : ±6 µm (excluding quantizing error)
Digital step	0,001 mm
Measuring pins	Titanium coated tungsten carbide (6 - 12 mm) Titanium coated hardened steel (12 - 125 mm)
Battery life	approx. 5000 hours
Display	LCD, character height: 11 mm
Delivered	Including box, key, 1 battery, certificate of inspection

Optional accessories

No.	Description
905338	Digimatic Cable, Flat Straight Type, 1m
905409	Digimatic Cable, Flat Straight Type, 2 m
02AZD790F	U-WAVE T Connection Cable F, Flat Straight Type
06ADV380F	USB Input Tool Direct (Digimatic USB) cable, 2m, Flat Straight Type
Extensions	
952621	Holtest, Borematic Extension 150mm, 12-20mm
952622	Holtest, Borematic Extension 150mm, 20-50mm
952623	Holtest, Borematic Extension 150mm, 50-300mm
952322	Holtest, Borematic Extension 100mm, 6-12mm

Consumable spares

No.	Description
938882	Battery SR44 1.5V

Titanium coated measuring surfaces for durability

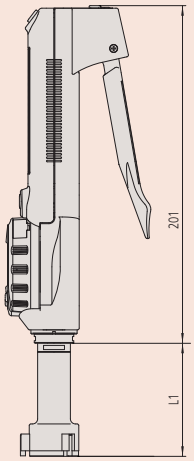

Series 568

ABSOLUTE®

This is a three-point Digimatic snap open bore gauge.
The Absolute Borematic offers you the following benefits:

- It enables you to take measurements easily and quickly.
- Titanium-coated measuring pins gives you excellent durability and impact resistance.
- A large LCD display with character height of 11mm makes measurements easy to read.
- 330° rotatable display unit also gives you easy reading at any angle.
- GO/NG tolerance judgement function.
- It has a function lock to protect the setup against unauthorised use.

568-361

568-364

568-366

568-368

Metric

No.	Range [mm]	L [mm]	a [mm]	b [mm]	c [mm]	Mass [g]
568-361	6-8	83	2		2,5	480
568-362	8-10	83	2		2,5	485
568-363	10-12	83	2		2,5	485
568-364	12-16	53	0,3	5,6	3,5	475
568-365	16-20	53	0,3	5,6	3,5	480
568-366	20-25	59,3	0,3	8,3	5,2	540
568-367	25-30	59,3	0,3	8,3	5,2	555
568-368	30-40	67,3	0,3	13	10	565
568-369	40-50	67,3	0,3	13	10	610
568-370	50-63	75,4	0,3	17	14	730
568-371	62-75	75,4	0,3	17	14	740
568-372	75-88	75,4	0,3	17	14	790
568-373	87-100	75,4	0,3	17	14	800
568-374	100-113	75,4	0,3	17	14	900
568-375	112-125	75,4	0,3	17	14	910

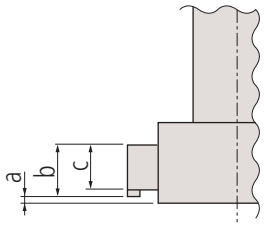

All products to be sold to commercial customers. Product illustrations are without obligation. Product descriptions, in particular any and all technical specifications, are only binding when explicitly agreed upon. For suggested retail prices, please refer to the separate price list.

Mitutoyo

ABSOLUTE Boremat

Series 568

This is a three-point Digimatic snap open bore gauge.
Each set includes one display unit with interchangeable measuring heads of the sizes specified.
The Absolute Boremat offers you the following benefits:

- It enables you to take measurements easily and quickly.
- Titanium-coated measuring pins gives you excellent durability and impact resistance.
- A large LCD display with character height of 11mm makes measurements easy to read.
- 330° rotatable display unit also gives you easy reading at any angle.
- GO/NG tolerance judgement function.
- It has a function lock to protect the setup against unauthorised use.

568-924

568-926

Metric

No.	Range [mm]	Individual ranges	Setting rings included	Mass [g]
568-924	6-12	6-8 mm 8-10 mm 10-12 mm	Ø8 mm (177-125) Ø10 mm (177-126)	530
568-925	12-25	12-16 mm 16-20 mm 20-25 mm	Ø16 mm (177-177) Ø20 mm (177-286)	690
568-926	25-50	25-30 mm 30-40 mm 40-50 mm	Ø30 mm (177-288) Ø40 mm (177-290)	930
568-927	50-100	50-63 mm 62-75 mm 75-88 mm 87-100 mm	Ø62 mm (177-314) Ø87 mm (177-318)	1850

Functions	Series 568
ZERO/ABS	●
GO/±NG judgement	●
ON/OFF	●
DATA/HOLD	●
2 x PRESET	●
Function lock	●
Data output	●

Specifications

Accuracy	6-20 mm : ±5 µm 20-125 mm : ±6 µm (excluding quantizing error)
Digital step	0,001 mm
Measuring pins	Titanium coated tungsten carbide (6 - 12 mm) Titanium coated hardened steel (12 - 125 mm)
Battery life	approx. 5000 hours
Display	LCD, character height: 11 mm
Delivered	Including box, key, 1 battery, setting ring, certificate of inspection

Optional accessories

No.	Description
905338	Digimatic Cable, Flat Straight Type, 1m
905409	Digimatic Cable, Flat Straight Type, 2 m
02AZD790F	U-WAVE T Connection Cable F, Flat Straight Type
06ADV380F	USB Input Tool Direct (Digimatic USB) cable, 2m, Flat Straight Type
Extensions	
952322	Holtest, Boremat Extension 100mm, 6-12mm
952621	Holtest, Boremat Extension 150mm, 12-20mm
952622	Holtest, Boremat Extension 150mm, 20-50mm
952623	Holtest, Boremat Extension 150mm, 50-300mm

Consumable spares

No.	Description
938882	Battery SR44 1.5V

Titanium coated measuring surfaces for durability

All products to be sold to commercial customers. Product illustrations are without obligation. Product descriptions, in particular any and all technical specifications, are only binding when explicitly agreed upon. For suggested retail prices, please refer to the separate price list.

ABSOLUTE Borematic

Functions	Series 568
ZERO/ABS	●
GO/±NG judgement	●
ON/OFF	●
DATA/HOLD	●
2 x PRESET	●
Function lock	●
Data output	●

Specifications

Accuracy	6-20 mm : ±5 µm 20-125 mm : ±6 µm (excluding quantizing error)
Digital step	0,001 mm
Measuring pins	Titanium coated tungsten carbide (6 - 12 mm) Titanium coated hardened steel (12 - 125 mm)
Battery life	approx. 5000 hours
Display	LCD, character height: 11 mm
Delivered	Including box, key, battery, setting ring, certificate of inspection

Optional accessories

No.	Description
905338	Digimatic Cable, Flat Straight Type, 1m
905409	Digimatic Cable, Flat Straight Type, 2 m
02AZD790F	U-WAVE T Connection Cable F, Flat Straight Type
06ADV380F	USB Input Tool Direct (Digimatic USB) cable, 2m, Flat Straight Type
Extensions	
952322	Holtest, Borematic Extension 100mm, 6-12mm
952621	Holtest, Borematic Extension 150mm, 12-20mm
952622	Holtest, Borematic Extension 150mm, 20-50mm
952623	Holtest, Borematic Extension 150mm, 50-300mm

Consumable spares

No.	Description
938882	Battery SR44 1.5V

Titanium coated measuring surfaces for durability

Series 568

ABSOLUTE®

This is a three-point Digimatic snap open bore gauge.
Each set includes display units and measuring heads for each size.
The Absolute Borematic offers you the following benefits:

- It enables you to take measurements easily and quickly.
- Titanium-coated measuring pins gives you excellent durability and impact resistance.
- A large LCD display with character height of 11mm makes measurements easy to read.
- 330° rotatable display unit also gives you easy reading at any angle.
- GO/NG tolerance judgement function.
- It has a function lock to protect the setup against unauthorised use.

568-959

Metric

No.	Range [mm]	Individual ranges	Setting rings included	Mass [g]
568-955	6-12	6-8 mm 8-10 mm 10-12 mm	Ø8 mm (177-125) Ø10 mm (177-126)	1450
568-956	12-25	12-16 mm 16-20 mm 20-25 mm	Ø16 mm (177-177) Ø20 mm (177-286)	1520
568-957	25-50	25-30 mm 30-40 mm 40-50 mm	Ø30 mm (177-288) Ø40 mm (177-290)	1750
568-958	50-75	50-63 mm 62-75 mm	Ø62 mm (177-314)	1490
568-959	75-100	75-88 mm 87-100 mm	Ø87 mm (177-318)	1610

Also available! Inch Models

All products to be sold to commercial customers. Product illustrations are without obligation. Product descriptions, in particular any and all technical specifications, are only binding when explicitly agreed upon. For suggested retail prices, please refer to the separate price list.

Mitutoyo

Measuring Heads for Borematic

Series 568

1 : Measuring head
2 : Adapter
3 : Display unit Borematic

Metric

Display unit Borematic

No.
568-014

Metric

Measuring heads

No.	Range [mm]
04AZB136	6-8
04AZB137	8-10
04AZB138	10-12
04AZA719	12-16
04AZA720	16-20
04AZA728	20-25
04AZA729	25-30
04AZA737	30-40
04AZA738	40-50
04AZA750	50-63
04AZA751	62-75
04AZA752	75-88
04AZA753	87-100
04AZA941	100-113
04AZA942	112-125

Adapter

No.	Range [mm]
954595	6-12
216556	12-20
216557	20-50
216558	50-125

Note : These adapters are necessary to adapt measuring heads to the Borematic display unit.

All products to be sold to commercial customers. Product illustrations are without obligation. Product descriptions, in particular any and all technical specifications, are only binding when explicitly agreed upon. For suggested retail prices, please refer to the separate price list.

Digimatic Caliper Jaw Inside Micrometer

Series 345

The Digimatic Caliper Jaw Inside Micrometer offers you the following features:
- You can measure surfaces in carbide, micro-lap finish.
- An inside-length standard is needed to accurately set the micrometer.

Functions	Series 345
Auto Power OFF after 20 min. non use	●
DATA/HOLD	●
2 x PRESET	●
Low voltage alarm	●
Function lock	●
Data output	●

Specifications

Accuracy	Refer to the list of specifications (excluding quantizing error)
Measuring force	1-6 N
Digital step	0,001 mm
Scale	Thimble and sleeve satin chrome finish, ø18 mm
Measuring surfaces	Carbide tipped
Measuring spindle	With spindle lock, spindle pitch 0,5 mm
Battery life	2,4 years
Delivered	Including box, key, 1 battery.

Optional accessories

No.	Description
05CZA662	Digimatic Cable with Data Button IP Type, 1m, Micrometer Type
05CZA663	Digimatic Cable with Data Button IP Type, 2m, Micrometer Type
06ADV380B	USB Input Tool Direct (Digimatic USB), with Data Button IP Micrometer Type
02AZD790B	U-WAVE T Connection Cable B, with Data Button IP Micrometer Type

Consumable spares

No.	Description
938882	Battery SR44 1.5V

345-250-30

Metric

No.	Range [mm]	Accuracy [µm]	Mass [g]
345-250-30	5-30	±5	305
345-251-30	25-50	±6	310

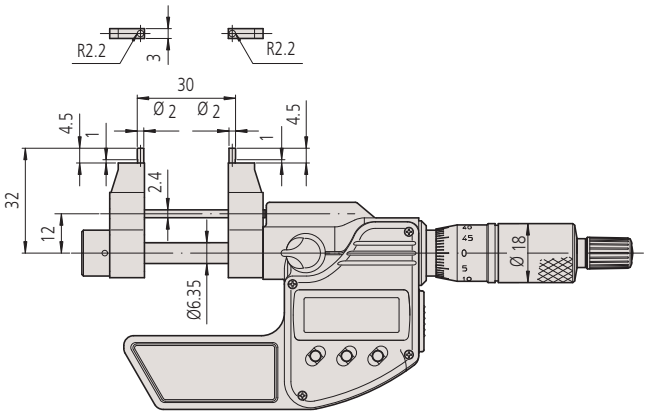

345-250-30

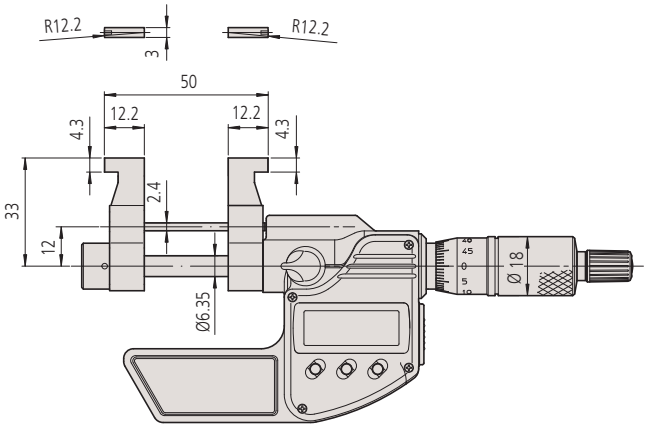

345-251-30

All products to be sold to commercial customers. Product illustrations are without obligation. Product descriptions, in particular any and all technical specifications, are only binding when explicitly agreed upon. For suggested retail prices, please refer to the separate price list.

Caliper Jaw Inside Micrometer

Series 145

The Digimatic Caliper Jaw Inside Micrometer offers you the following features:
- You can measure surfaces in carbide, micro-lap finish.
- An inside-length standard is needed to accurately set the micrometer.

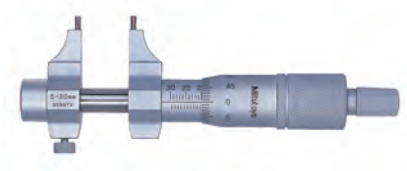

145-185

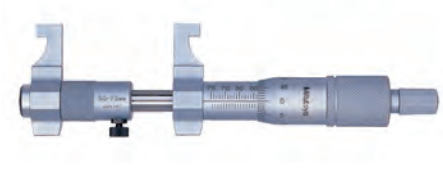

145-187

Metric

No.	Range [mm]	Accuracy [µm]	Mass [g]
145-185	5-30	±5	130
145-186	25-50	±6	140
145-187	50-75	±7	160
145-188	75-100	±8	180
145-189	100-125	±9	210
145-190	125-150	±9	230
145-191	150-175	±10	250
145-192	175-200	±10	270
145-217	200-225	±11	310
145-218	225-250	±11	330
145-219	250-275	±12	350
145-220	275-300	±12	370

Also available! Inch Models

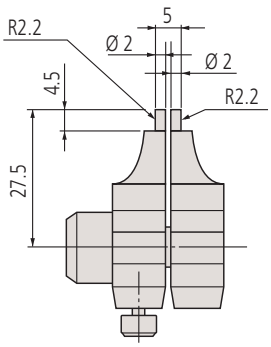

145-185

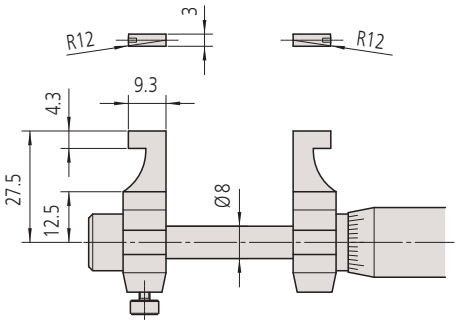

145-186

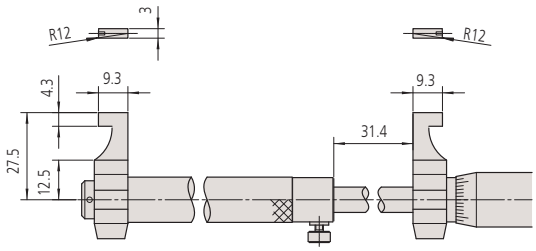

50-300 mm

Specifications

Accuracy	Refer to the list of specifications
Measuring force	1-6 N
Graduation	0,01 mm
Scale	Thimble and sleeve satin chrome finish, ø18 mm
Measuring surfaces	Carbide tipped
Measuring spindle	With spindle lock, spindle pitch 0,5 mm
Delivered	Including box, key

Optional accessories

No.	Description
300400	Holder for Series 145
300401	Cap for Series 145

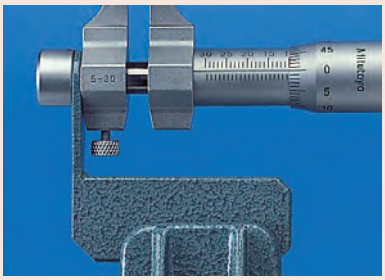

Holder and cap for:
145-185, 145-186, 145-193, 145-194

All products to be sold to commercial customers. Product illustrations are without obligation. Product descriptions, in particular any and all technical specifications, are only binding when explicitly agreed upon. For suggested retail prices, please refer to the separate price list.

Tubular Inside Micrometer

Series 133

This is a standard single rod type inside micrometer, with the following features:
- Standard single rod.
- Carbide measuring faces.

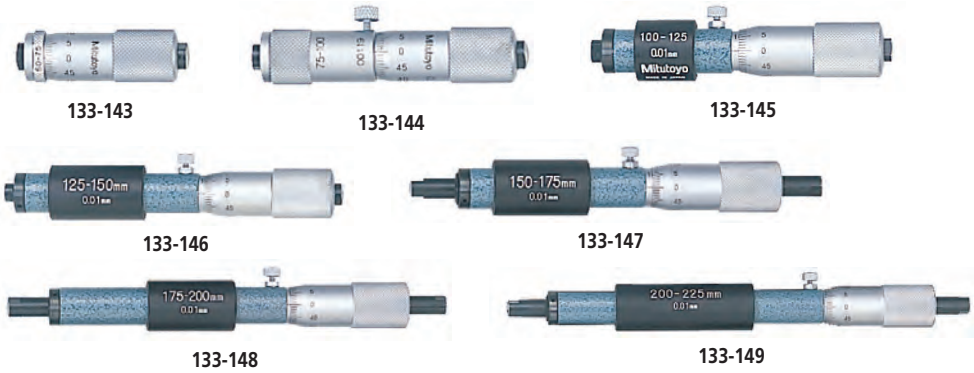

Specifications

Accuracy	Refer to the list of specifications
Graduation	0,01mm
Scale	Thimble and sleeve satin chrome finish, Ø18 mm
Measuring surfaces	Carbide tipped, crown lapped
Measuring spindle	With spindle lock (except 50-75 mm), spindle pitch 0,5 mm
Delivered	Including box, insulation (from 100 mm), key

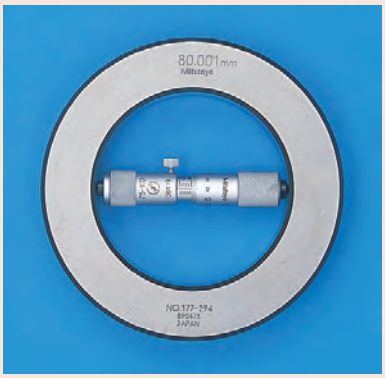

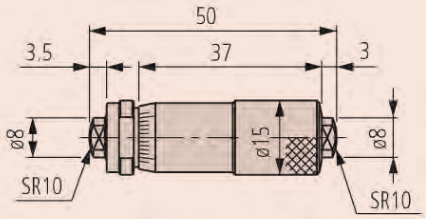

133-143

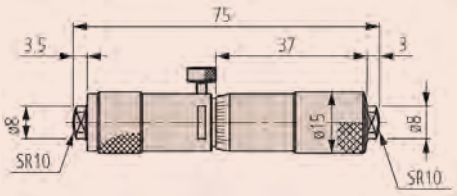

133-144

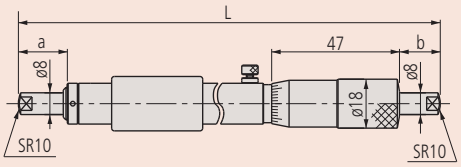

100-1000 mm

Metric

No.	Range [mm]	Accuracy [µm]	L [mm]	a [mm]	b [mm]	Mass [g]
133-143	50-75	±3				50
133-144	75-100	±4				75
133-145	100-125	±5	100	5	3	130
133-146	125-150	±5	125	5	3	160
133-147	150-175	±5	150	18	15	170
133-148	175-200	±5	175	18	15	180
133-149	200-225	±5	200	18	15	200
133-150	225-250	±6	225	18	15	210
133-151	250-275	±6	250	18	15	235
133-152	275-300	±6	275	18	15	245
133-153	300-325	±7	300	18	15	265
133-154	325-350	±7	325	18	15	285
133-155	350-375	±7	350	18	15	300
133-156	375-400	±8	375	18	15	315
133-157	400-425	±8	400	18	15	330
133-158	425-450	±8	425	18	15	340
133-159	450-475	±9	450	18	15	360
133-160	475-500	±9	475	18	15	370
133-161	500-525	±9	500	18	15	390
133-162	525-550	±10	525	18	15	400
133-163	550-575	±10	550	18	15	410
133-164	575-600	±10	575	18	15	415
133-165	600-625	±11	600	18	15	430
133-166	625-650	±11	625	18	15	450
133-167	650-675	±11	650	18	15	470
133-168	675-700	±12	675	18	15	480
133-169	700-725	±12	700	18	15	500
133-170	725-750	±12	725	18	15	510
133-171	750-775	±13	750	18	15	520
133-172	775-800	±13	775	18	15	540
133-173	800-825	±13	800	18	15	555
133-174	825-850	±14	825	18	15	570
133-175	850-875	±14	850	18	15	590
133-176	875-900	±14	875	18	15	600
133-177	900-925	±15	900	18	15	620
133-178	925-950	±15	925	18	15	630
133-179	950-975	±15	950	18	15	650
133-180	975-1000	±16	975	18	15	670

Also available! Inch Models

All products to be sold to commercial customers. Product illustrations are without obligation. Product descriptions, in particular any and all technical specifications, are only binding when explicitly agreed upon. For suggested retail prices, please refer to the separate price list.

Tubular Inside Micrometer

Series 133

This is a standard single rod type inside micrometer, with the following features:
- Standard single rod.
- Carbide measuring faces.

133-902

Metric

Micrometer set

No.	Range [mm]	Models included	Mass [g]
133-901	50-150	133-143, 133-144, 133-145, 133-146	415
133-902	50-300	133-143, 133-144, 133-145133-146 133-147, 133-148, 133-149133-150, 133-151, 133-152	1655

Also available! Inch Models

Specifications

Graduation	0,01mm
Scale	Thimble and sleeve satin chrome finish, Ø18 mm
Measuring surfaces	Carbide tipped, crown lapped
Measuring spindle	With spindle lock (except 50-75 mm), spindle pitch 0,5 mm
Delivered	Including box, insulation (from 100 mm), key

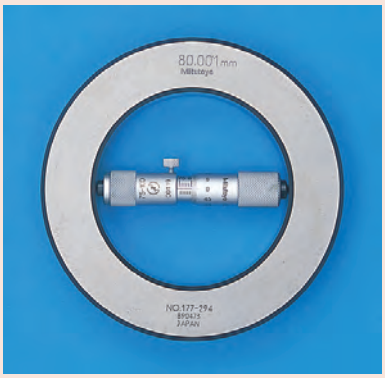

All products to be sold to commercial customers. Product illustrations are without obligation. Product descriptions, in particular any and all technical specifications, are only binding when explicitly agreed upon. For suggested retail prices, please refer to the separate price list.

Tubular Inside Micrometer with Extensions

Series 137

This is an extension rod type inside micrometer that offers you the following benefits:
- Interchangeable extensions with cylindrical gage rods are spring-mounted in protective sleeves so you can extend the measuring range.
- Carbide measuring faces are available.

137-205

137-011

Specifications

Accuracy	±(3+n+L/50) µm n = Number of extensions, L = Maximum measuring length (mm)
Graduation	0,01 mm
Scale	Thimble and sleeve satin chrome finish, ø15 mm
Measuring spindle	Spindle pitch 0,5 mm
Measuring span	13 mm
Extension	ø12,5 mm
Delivered	Including box, key, extensions, micrometer head

Optional accessories

No.	Description
137-011	Inside Micrometer, Hardened Face, 50-63mm
137-013	Inside Micrometer, Carbide-tipped, 50-63mm

Consumable spares

No.	Description
980505	Extension Rod for Series 137, 13mm, Hardened Face
980507	Extension Rod for Series 137, 25mm, Hardened Face
980509	Extension Rod for Series 137, 50mm, Hardened Face
980511	Extension Rod for Series 137, 100mm, Hardened Face
980515	Extension Rod for Series 137, 200mm, Hardened Face
980517	Extension Rod for Series 137, 300mm, Hardened Face
980519	Extension Rod for Series 137, 337, 13mm, Carbide Tipped
980521	Extension Rod for Series 137, 337, 25mm, Carbide Tipped
980523	Extension Rod for Series 137, 337, 50mm, Carbide Tipped
980525	Extension Rod for Series 137, 337, 100mm, Carbide Tipped
980529	Extension Rod for Series 137, 337, 200mm, Carbide Tipped
980531	Extension Rod for Series 137, 337, 300mm, Carbide Tipped

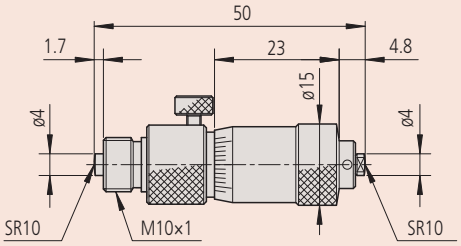

Micrometer Head for series 137

Metric — With carbide measuring surface

No.	Range [mm]	Extension rods	Mass [g]
137-206	50-150	3 (13, 25, 50 mm)	145
137-207	50-300	5 (13, 25, 50 (2 pcs.), 100 mm)	305
137-208	50-500	6 (13, 25, 50 (2 pcs.), 100, 200 mm)	460
137-209	50-1000	8 (13, 25, 50 (2 pcs.), 100, 200 (2 pcs.), 300 mm)	845
137-210	50-1500	10 (13, 25, 50 (2 pcs.) 100, 200 (3 pcs.), 300 mm (2 pcs.))	1225

Metric — With hardened measuring surface

No.	Range [mm]	Extension rods	Mass [g]
137-201	50-150	3 (13, 25, 50 mm)	145
137-202	50-300	5 (13, 25, 50 (2 pcs.), 100 mm)	305
137-203	50-500	6 (13, 25, 50 (2 pcs.), 100, 200 mm)	460
137-204	50-1000	8 (13, 25, 50 (2 pcs.), 100, 200 (2 pcs.), 300 mm)	845
137-205	50-1500	10 (13, 25, 50 (2 pcs.), 100, 200 (3 pcs.), 300 mm (2 pcs.))	1225

Also available! Inch Models

All products to be sold to commercial customers. Product illustrations are without obligation. Product descriptions, in particular any and all technical specifications, are only binding when explicitly agreed upon. For suggested retail prices, please refer to the separate price list.

Mitutoyo

Tubular Inside Micrometer with Extensions

Series 139

This is an extension pipe type inside micrometer that offers you the following benefits:
- Interchangeable extensions in a hollow pipe design.
- Carbide measuring faces.

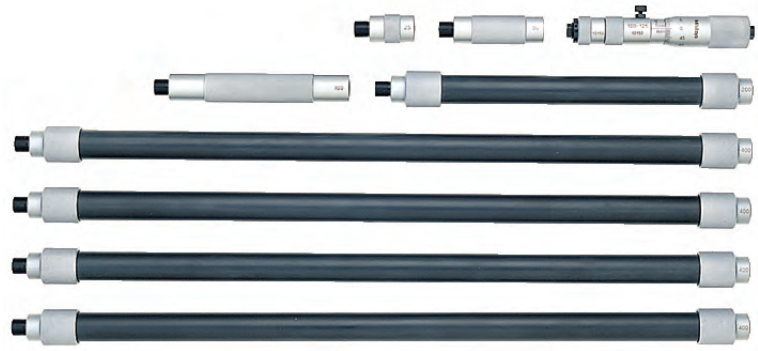

139-177

139-001

139-005

Metric

No.	Range [mm]	Extension rods	Mass [g]
139-173	100-500	4 (25, 50, 100, 200 mm)	490
139-174	100-900	5 (25, 50, 100, 200, 400 mm)	790
139-175	100-1300	6 (25, 50, 100, 200, 400 mm (2 pcs.))	1090
139-176	100-1700	7 (25, 50, 100, 200, 400 mm (3 pcs.))	1390
139-177	100-2100	8 (25, 50, 100, 200, 400 mm (4 pcs.))	1690
139-203	40-300	8 (10, 20, 30, 60, 90, 110, 120, 130 mm)	240
139-204	100-1000	10 (25, 50, 75, 150, 225, 300, 350, 400, 425, 450 mm)	770

Also available! Inch Models

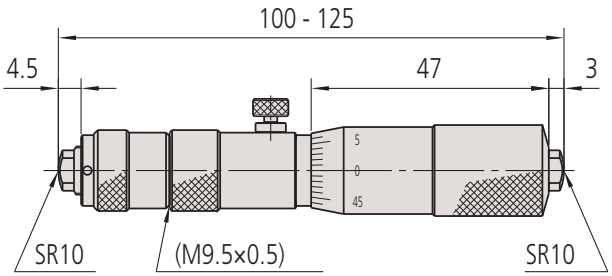

139-001

Specifications

Accuracy	±(3+n+L/50) µm ±(6+L/50) µm (139-203, 139-204) n = number of extensions, L = Maximum measuring length (mm)
Graduation	0,01 mm
Scale	Thimble and sleeve satin chrome finish, ø18 mm ø13 mm (139-203, 139-204)
Measuring surfaces	Carbide Hardened (139-203, 139-204)
Measuring spindle	Spindle pitch 0,5 mm
Measuring span	25 mm 10 mm(139-203), 25 mm (139-204)
Extension	ø17 mm ø10 mm (139-203, 139-204)
Delivered	Including box, key, extensions, micrometer head

Standard accessories

No.	Description
139-001	Tubular Inside Micrometer, 100-125mm, for 139-173 to 139-177
139-003	Tubular Inside Micrometer 100-110mm, for 139-203
139-005	Tubular Inside Micrometer 100-125mm, for 139-204

Consumable spares

No.	Description
981003	Extension Rod for Series 139, 339, 25mm
981005	Extension Rod for Series 139, 339, 50mm
981007	Extension Rod for Series 139, 339, 100mm
981009	Extension Rod for Series 139, 339, 200mm
981011	Extension Rod for Series 139, 339, 400mm
981981	Extension Rod 10mm, for 139-203
981982	Extension Rod 20mm, for 139-203
981983	Extension Rod 30mm, for 139-203
981984	Extension Rod 60mm, for 139-203
981985	Extension Rod 90mm, for 139-203
981986	Extension Rod 110mm, for 139-203
981987	Extension Rod 120mm, for 139-203
981988	Extension Rod 130mm, for 139-203
981991	Extension Rod 25mm, for 139-204
981993	Extension Rod 75mm, for 139-204
981994	Extension Rod 150mm, for 139-204
981995	Extension Rod 225mm, for 139-204
981996	Extension Rod 300mm, for 139-204
981997	Extension Rod 350mm, for 139-204
981998	Extension Rod 400mm, for 139-204
981999	Extension Rod 425mm, for 139-204
982000	Extension Rod 450mm, for 139-204

All products to be sold to commercial customers. Product illustrations are without obligation. Product descriptions, in particular any and all technical specifications, are only binding when explicitly agreed upon. For suggested retail prices, please refer to the separate price list.

Tubular Inside Micrometer with Extensions

Series 140

This is a long range inside micrometer that offers you the following benefits:
- It has a long measuring range of up to 5000mm
- Extension tube type design.
- Measuring surfaces in carbide, micro-lap finish

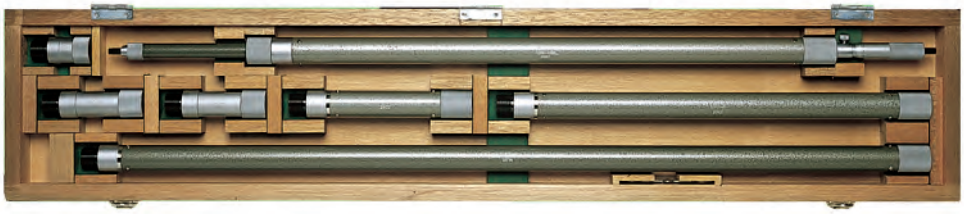

140-158

Specifications

Accuracy	±(7+n+L/50) µm n = number of extensions, L = Maximum measuring length (mm)
Graduation	0,01 mm
Scale	Thimble and sleeve satin chrome finish, ø21 mm
Measuring spindle	Spindle pitch 0,5 mm
Measuring span	50 mm
Extension	ø32 mm
Delivered	Including box, key

Consumable spares

No.	Description
04GZA394	Extension Rod 50mm, for Series 140
04GZA396	Extension Rod 100mm, for Series 140
04GZA398	Extension Rod 200mm, for Series 140
04GZA400	Extension Rod 500mm, for Series 140
04GZA402	Extension Rod 1000mm, for Series 140

Metric

No.	Range [mm]	Extension rods	Mass [g]
140-157	1000-2000	5 (50, 100 (2 pcs.) 200, 500 mm)	3700
140-158	1000-3000	6 (50, 100 (2 pcs.), 200, 500, 1000 mm)	5200
140-159	1000-4000	7 (50, 100 (2 pcs.), 200, 500, 1000 mm (2 pcs.))	6700
140-160	1000-5000	8 (50, 100 (2 pcs.) 200, 500, 1000 mm (3 pcs.))	8260

Also available! Inch Models

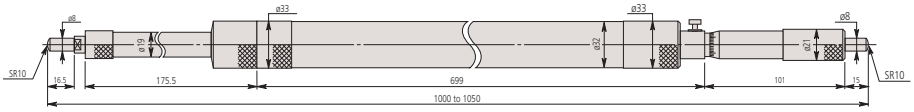

Micrometer Head for series 140

All products to be sold to commercial customers. Product illustrations are without obligation. Product descriptions, in particular any and all technical specifications, are only binding when explicitly agreed upon. For suggested retail prices, please refer to the separate price list.

Mitutoyo

Digimatic Tubular Inside Micrometer with Extensions

Series 337

This is an extension rod type inside micrometer that offers you the following benefits:

- Interchangeable extensions with cylindrical gage rods are spring-mounted in protective sleeves so you can extend the measuring range.
- Carbide measuring faces.
- Digimatic type, with data output.
- It has excellent resistance against water and dust (IP65 protection level) enabling you to use it in machining situations that include splashing coolant fluid.

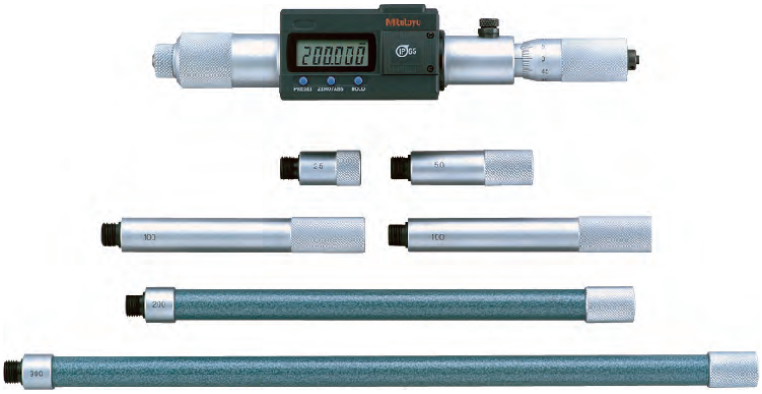

337-301

Metric

No.	Range [mm]	Extension rods	Mass [g]
337-301	200-1000	6 (25, 50, 100 (2 pcs.), 200, 300 mm)	1040
337-302	200-1500	7 (25, 50, 100, 200, 300 (3 pcs.))	1410

Also available! Inch/Metric Models

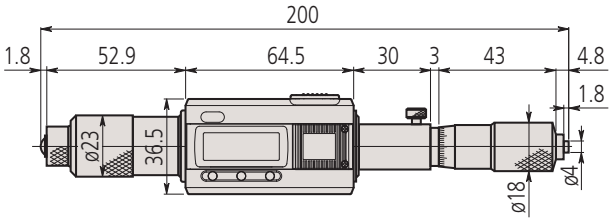

Micrometer Head for series 337

Functions	Series 337
ZERO/ABS	●
Auto Power OFF after 20 min. non use	●
2 x PRESET	●
Low voltage alarm	●
Function lock	●
Data output	●

Specifications

Accuracy	±(3+n+L/50) µm n = Number of extensions, L = Maximum measuring length (mm) (excluding quantizing error)
Digital step	0,001 mm
Scale	Thimble and sleeve satin chrome finish, ø18 mm
Measuring spindle	Spindle pitch 0,5 mm
Measuring span	25 mm
Extension	ø12,5 mm
Delivered	Including box, key, 1 battery, extensions, micrometer head
Display	LCD, character height 7,5 mm

Standard accessories

No.	Description
337-101	Digital Tubular Inside Micrometer (Rod), 200-225mm, Digimatic, IP65

Optional accessories

No.	Description
05CZA662	Digimatic Cable with Data Button IP Type, 1m, Micrometer Type
05CZA663	Digimatic Cable with Data Button IP Type, 2m, Micrometer Type
06ADV380B	USB Input Tool Direct (Digimatic USB), with Data Button IP Micrometer Type
02AZD790B	U-WAVE T Connection Cable B, with Data Button IP Micrometer Type

Consumable spares

No.	Description
938882	Battery SR44 1.5V
980521	Extension Rod for Series 137, 337, 25mm, Carbide Tipped
980523	Extension Rod for Series 137, 337, 50mm, Carbide Tipped
980525	Extension Rod for Series 137, 337, 100mm, Carbide Tipped
980529	Extension Rod for Series 137, 337, 200mm, Carbide Tipped
980531	Extension Rod for Series 137, 337, 300mm, Carbide Tipped

All products to be sold to commercial customers. Product illustrations are without obligation. Product descriptions, in particular any and all technical specifications, are only binding when explicitly agreed upon. For suggested retail prices, please refer to the separate price list.

Digimatic Tubular Inside Micrometer with Extensions

Functions	Series 339
ZERO/ABS	●
Auto Power OFF after 20 min. non use	●
2 x PRESET	●
Low voltage alarm	●
Function lock	●
Data output	●

Specifications

Accuracy	±(3+n+L/50) µm n = number of extensions, L = Maximum measuring length (mm) (excluding quantizing error)
Digital step	0,001 mm
Scale	Thimble and sleeve satin chrome finish, ø18 mm
Measuring spindle	Spindle pitch 0,5 mm
Measuring span	25 mm
Extension	ø17 mm
Delivered	Including box, key, 1 battery, extensions, micrometer head
Display	LCD, character height 7,5 mm

Standard accessories

No.	Description
339-101	Digital Tubular Inside Micrometer (Pipe), 200-225mm, Digimatic, IP65

Optional accessories

No.	Description
05CZA662	Digimatic Cable with Data Button IP Type, 1m, Micrometer Type
05CZA663	Digimatic Cable with Data Button IP Type, 2m, Micrometer Type
06ADV380E	USB Input Tool Direct (Digimatic USB) cable, 2m, Round 6-Pin Type
02AZD790E	U-WAVE T Connection Cable E, Round 6-Pin Type

Consumable spares

No.	Description
938882	Battery SR44 1.5V
981003	Extension Rod for Series 139, 339, 25mm
981005	Extension Rod for Series 139, 339, 50mm
981007	Extension Rod for Series 139, 339, 100mm
981009	Extension Rod for Series 139, 339, 200mm
981011	Extension Rod for Series 139, 339, 400mm

Series 339

Dust- and Waterproof IP65

This is an extension pipe type inside micrometer that offers you the following benefits:

- Interchangeable extensions in a hollow pipe design.
- Carbide measuring faces.
- Digimatic type with data output.
- It has excellent resistance against water and dust (IP65 protection level) enabling you to use it in machining situations that include splashing coolant fluid.

339-301

Metric

No.	Range [mm]	Extension rods	Mass [g]
339-301	200-1000	5 (25, 50, 100, 200, 400 mm)	1050
339-302	200-2000	8 (25, 50, 100, 200 (2 pcs.), 400 mm (3 pcs.))	1800

Also available! Inch/Metric Models

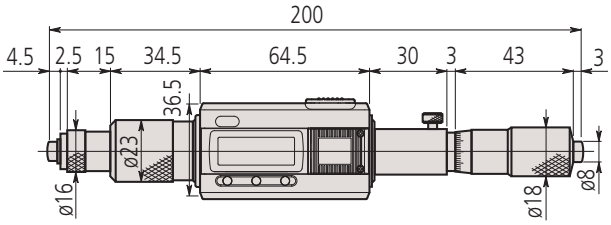

Micrometer Head for series 339

All products to be sold to commercial customers. Product illustrations are without obligation. Product descriptions, in particular any and all technical specifications, are only binding when explicitly agreed upon. For suggested retail prices, please refer to the separate price list.

Inside Micrometer with Interchangeable Rod

Series 141 - Interchangeable Rod Type

This an interchangeable rod type inside micrometer that offers you the following benefits:
- Interchangeable measuring rods allow you to take inside measurements of up to 1000mm.
- Each interchangeable rod is marked with its measuring range.
- For models supplied with more than one interchangeable rod, you can achieve the full measuring range by combining spacing collars with the rods.
- A extension handle to help you measure deep bores is included in sets up to 300mm range.

141-205

Metric

No.	Range [mm]	Head adjustment range [mm]	Interchangeable rod	Extension collar	Accessories: inside micrometer (standard in the set) No.	Mass [g]
141-001	25-32	7	-	-	-	20
141-101	25-50	7	2 (38, 50 mm)	1 (6 mm)	141-001	60
141-025	50-63	13	-	-	-	40
141-205	50-200	13	3 (100, 150, 200 mm)	1 (12 mm)	141-025	125
141-206	50-300	13	5 (100, 150, 200, 250, 300 mm)	1 (12 mm)	141-025	275
141-009	200-225	25	-	-	-	220
141-117	200-500	25	3 (300, 400, 500 mm)	2 (25/50 mm)	141-009	520
141-118	200-1000	25	8 (300, 400, 500, 600, 700, 800, 900, 1000 mm)	2 (25/50 mm)	141-009	1940

Metric

With carbide measuring surface

No.	Range [mm]	Head adjustment range [mm]	Interchangeable rod	Extension collar	Accessories: inside micrometer (standard in the set) No.	Mass [g]
141-003	25-32	7	-	-	-	20
141-103	25-50	7	2 (38, 50 mm)	1 (6 mm)	141-003	60
141-027	50-63	13	-	-	-	40
141-211	50-200	13	3 (100, 150, 200 mm)	1 (12 mm)	141-027	125
141-212	50-300	13	5 (100, 150, 200, 250, 300 mm)	1 (12 mm)	141-027	275
141-011	200-225	25	-	-	-	220

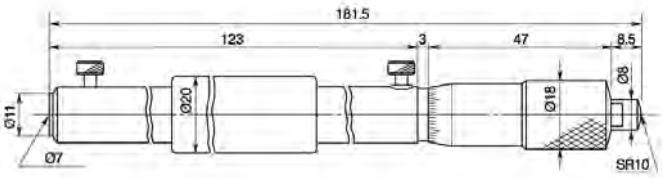

141-009

Specifications

Accuracy	±(6+L/50) µm, L = Maximum measuring length (mm)
Graduation	0,01 mm
Scale	Thimble and sleeve satin chrome finish
Measuring surfaces	Hardened
Measuring spindle	Spindle pitch 0,5 mm with spindle lock
Delivered	Including box, key

When using one of the extension rods supplied

141-101 with extensionl handle

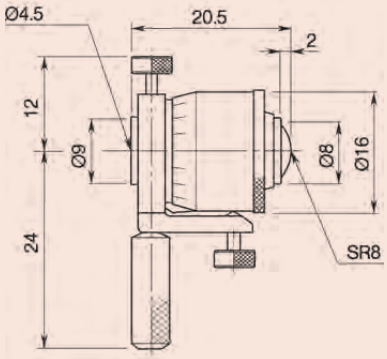

141-001/003

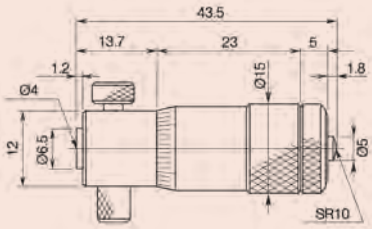

141-025/027

All products to be sold to commercial customers. Product illustrations are without obligation. Product descriptions, in particular any and all technical specifications, are only binding when explicitly agreed upon. For suggested retail prices, please refer to the separate price list.

Bore Gauge for Extra Small Holes

Series 526 Bore Gauge

This is a two point split contact point ideally suited to smaller bore measurements.
It offers you the following benefits:

- A precision bore gauge so you can make quick and accurate measurements of small hole diameters (0,95-18 mm).
- You can replace the analogue indicator fitted to this instrument with a customer-supplied Digimatic indicator if you need.
- The contact point is hard chrome finish

Specifications

Accuracy	4 µm 6 µm for range 10-18 mm
Repeatability	2 µm
Delivered	In box including plastic cover for Dial Indicator

Optional accessories

No.	Description
215-120-10	Stand for Bore Gauge Series 526
543-310B	Digital Indicator Bore Gauge ID-C, 12,7mm, 0,001mm, Flat Back

Setting rings are optional accessories. See Series 177 for details.

215-120-10

543-310B

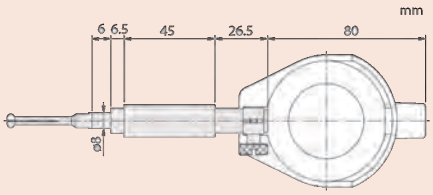

0,95 - 4 mm

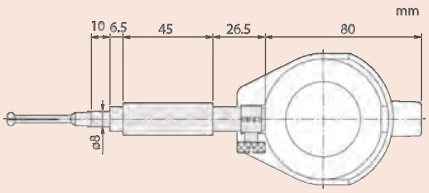

3,7 - 7,3 mm

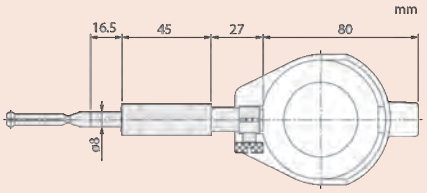

7 - 18 mm

For details on indicators suitable for use with this instrument, refer to Dial Gauges section.

526-127

526-172-1

Plastic cover for Dial Indicator including

Metric

No.	Range [mm]	Graduation	No. Dial Indicator	Measuring depth	Number of anvils
526-173-1	0,95-1,55	0,01 mm	2046SB	11,5 mm	5
526-163-1	1,5-4	0,01 mm	2046SB	17,5-22,5 mm (1)	9
526-153-1	3,7-7,3	0,01 mm	2046SB	32 mm	7
526-126	7-10	0,01 mm	2046SB	40-56 mm (2)	6
526-127	10-18	0,01 mm	2046SB	62 mm	8
526-172-1	0,95-1,55	0,001 mm	2109SB-10	11,5 mm	5
526-162-1	1,5-4	0,001 mm	2109SB-10	17,5-22,5 mm (1)	9
526-152-1	3,7-7,3	0,001 mm	2109SB-10	32 mm	7
526-124	7-10	0,001 mm	2109SB-10	40-56 mm (2)	6
526-125	10-18	0,001mm	2109SB-10	62 mm	8

(1) Holes Ø ≤ 2,25 mm : measuring depth 17,5 mm / holes Ø > 2,25 mm : measuring depth 22,5 mm
(2) Holes Ø ≤ 8 mm : measuring depth 40 mm / holes Ø > 8 mm : measuring depth 56 mm

Also available! Inch Models

All products to be sold to commercial customers. Product illustrations are without obligation. Product descriptions, in particular any and all technical specifications, are only binding when explicitly agreed upon. For suggested retail prices, please refer to the separate price list.

Bore Gauge for Extra Small Holes

Contact Point for Series 526

Replacement contact points for Series 526

Replacement contact points

No.	Range [mm]	Marking on the measuring head (engraved)	A [mm]	B [mm]	C [mm]
102469	7-7,5	1	1,8	40	29,2
102470	7,5-8	2	1,8	40	29,2
102471	8-8,5	3	1,8	40	29,2
102472	8,5-9	4	1,8	40	29,2
102473	9-9,5	5	1,8	40	29,2
102474	9,5-10	6	1,8	40	29,2
102454	10-11	1	2,1	46	38
102455	11-12	2	2,7	46	38
102456	12-13	3	2,7	46	38
102457	13-14	4	2,7	46	38
102458	14-15	5	2,7	46	38
102459	15-16	6	2,7	46	38
102460	16-17	7	2,7	46	38
102461	17-18	8	2,7	46	38
201414	0,95-1,15	1	11,5		
201415	1,07-1,25	1,1	11,5		
201416	1,17-1,35	1,2	11,5		
201417	1,27-1,45	1,3	11,5		
201418	1,37-1,55	1,4	11,5		
201419	1,5-1,9	1,75	17,5		
201420	1,8-2,2	2	17,5		
201421	2,05-2,45	2,25	17,5		
201422	2,25-2,75	2,5	22,5		
201423	2,5-3	2,75	22,5		
201424	2,75-3,25	3	22,5		
201425	3-3,5	3,25	22,5		
201426	3,25-3,75	3,5	22,5		
201427	3,5-4	3,75	22,5		
201428	3,7-4,3	4	32		
201429	4,2-4,8	4,5	32		
201430	4,7-5,3	5	32		
201431	5,2-5,8	5,5	32		
201432	5,7-6,3	6	32		
201433	6,2-6,8	6,5	32		
201434	6,7-7,3	7	32		

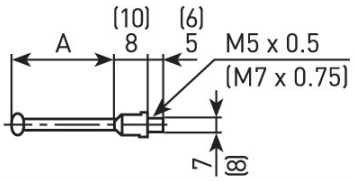

526-162-1, 526-163-1, 526-172-1, 526-173-1
( ) 526-152-1, 526-153-1

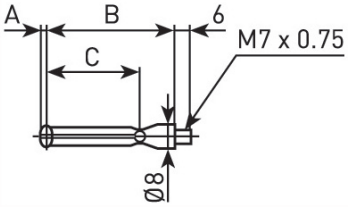

526-124, 526-125, 526-126, 526-127

526-153-1

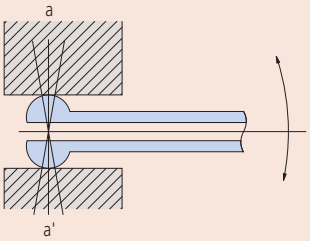

Positioning of Bore Gauges
The contact points have a large curvature, simplifying positioning for bore diameter measurement (in the direction a-a')

All products to be sold to commercial customers. Product illustrations are without obligation. Product descriptions, in particular any and all technical specifications, are only binding when explicitly agreed upon. For suggested retail prices, please refer to the separate price list.

Bore Gauge for Small Holes

Series 511

These are bore gauges that automatically self-centre via a centring bridge.
They offer you the following benefits:
- Easy to handle and adaptable to most bore gauging applications (6-400mm).
- A long plunger stroke gives you amazing accuracy.
- Interchangeable washers 0,5mm thick are supplied as standard accessories, so you can enable setting in small steps.
- Contact points are carbide (> 18mm range), giving you high durability and wear resistance.
- A large grip reduces heat transfer from the operator by 50%.

Specifications

Accuracy	5 µm
Delivered	Including box, dial indicator, plastic cover for indicator

Optional accessories

No.	Description
543-310B	Digital Indicator Bore Gauge ID-C, 12,7mm, 0,001mm, Flat Back

543-310B

For details on indicators suitable for use with this instrument, refer to the Dial Gauges section.

511-204

6 - 10mm

10 - 18.5mm

Metric

No.	Range [mm]	Graduation	No. Dial Indicator	Measuring depth	Stroke of contact point [mm]	Number of anvils	Mass [g]
511-211	6-10	0,01 mm	2046SB	50 mm	0,5	9	255
511-204	10-18,5	0,01 mm	2046SB	100 mm	0,6	9	264
511-210	6-10	0,001 mm	2109SB-10	50 mm	0,5	9	255
511-203	10-18,5	0,001 mm	2109SB-10	100 mm	0,6	9	268

Also available! Inch Models

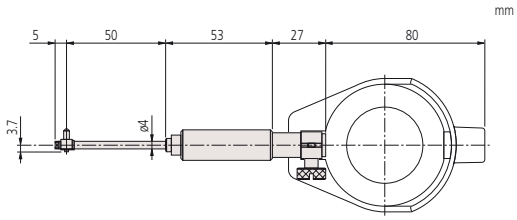

6-10 mm

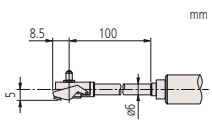

10-18,5 mm

All products to be sold to commercial customers. Product illustrations are without obligation. Product descriptions, in particular any and all technical specifications, are only binding when explicitly agreed upon. For suggested retail prices, please refer to the separate price list.

Bore Gauge

Series 511

These are bore gauges that automatically self-centre via a centring bridge.
They offer you the following benefits:
- Easy to handle and adaptable to most bore gauging applications (6-400mm).
- A long plunger stroke gives you amazing accuracy.
- Interchangeable washers 0,5mm thick are supplied as standard accessories, so you can enable setting in small steps.
- Contact points are carbide (> 18mm range), giving you high durability and wear resistance.
- A large grip reduces heat transfer from the operator by 50%.

511-712

511-713

Extensions for deep-hole measurement (optional accessory)

Metric

No.	Range [mm]	Graduation	No. Dial Indicator	Measuring depth	Number of anvils	Mass [g]
511-721	18-35	0,001 mm	2109SB-10	100 mm	9	330
511-722	35-60	0,001 mm	2109SB-10	150 mm	6	400
511-723	50-150	0,001 mm	2109SB-10	150 mm	11	420
511-724	100-160	0,001 mm	2109SB-10	150 mm	13	480
511-725	160-250	0,001 mm	2109SB-10	250 mm	6	850
511-726	250-400	0,001 mm	2109SB-10	250 mm	5	945
511-711	18-35	0,01 mm	2046SB	100 mm	9	330
511-712	35-60	0,01 mm	2046SB	150 mm	6	400
511-713	50-150	0,01 mm	2046SB	150 mm	11	420
511-714	100-160	0,01 mm	2046SB	150 mm	13	480
511-715	160-250	0,01 mm	2046SB	250 mm	6	850
511-716	250-400	0,01 mm	2046SB	250 mm	5	945

Also available! Inch Models

Specifications

Accuracy	2 µm
Repeatability	0,5 µm
Stroke of contact point	18 - 60 mm: 1,2 mm 50 - 400 mm: 1,6 mm
Delivered	Including box, dial indicator, plastic cover for indicator

Optional accessories

No.	Description
953549	Extension Rod Series 511, 125mm, 9mm rod diameter
953550	Extension Rod Series 511, 250mm, 9mm rod diameter
953551	Extension Rod Series 511, 500mm, 9mm rod diameter
953552	Extension Rod Series 511, 125mm, 12mm rod diameter
953553	Extension Rod Series 511, 250mm, 12mm rod diameter
953554	Extension Rod Series 511, 500mm, 12mm rod diameter
953555	Extension Rod Series 511, 750mm, 12mm rod diameter
953556	Extension Rod Series 511, 1000mm, 12mm rod diameter
953557	Extension Rod Series 511, 125mm, 15mm rod diameter
953558	Extension Rod Series 511, 500mm, 15mm rod diameter
953559	Extension Rod Series 511, 750mm, 15mm rod diameter
953560	Extension Rod Series 511, 1000mm, 15mm rod diameter
952361	Extension Rod Series 511, 250mm, 15mm rod diameter
543-310B	Digital Indicator Bore Gauge ID-C, 12,7mm, 0,001mm, Flat Back

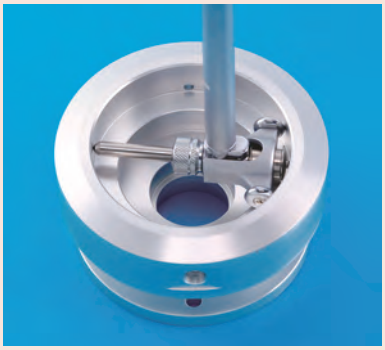

For details on indicators suitable for use with this instrument, refer to the Dial Gauges section.
For a description of replacement contact points, see the Spare Parts section at end of catalogue.

All products to be sold to commercial customers. Product illustrations are without obligation. Product descriptions, in particular any and all technical specifications, are only binding when explicitly agreed upon. For suggested retail prices, please refer to the separate price list.

Bore Gauge

Series 511

Example of measuring heads with different capacity.

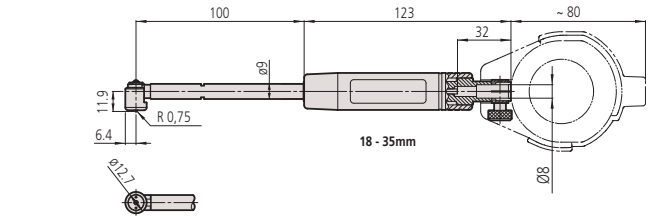

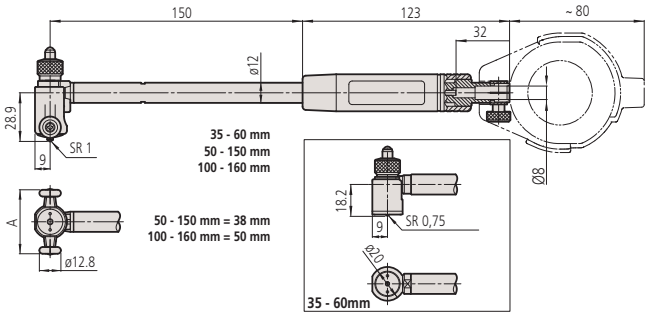

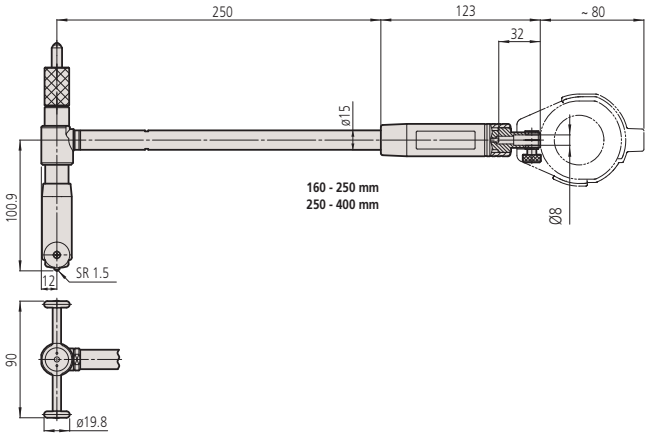

All products to be sold to commercial customers. Product illustrations are without obligation. Product descriptions, in particular any and all technical specifications, are only binding when explicitly agreed upon. For suggested retail prices, please refer to the separate price list.

Mitutoyo

Bore Gauge

Series 511

Bore gauge sets

511-921

Indicator 2046SB included in the set 511-921

Indicator 2109SB-10 included in the set 511-922

Indicator 543-310B included in the set 511-925-10

Metric

No.	Range [mm]	Graduation	No. Dial Indicator	Measuring depth
511-921	18-150	0,01 mm	2046SB	100/150 mm
511-922	18-150	0,001 mm	2109SB-10	100/150 mm
511-925-10	18-150	0,001 mm	543-310B	100/150 mm

Also available! Inch Models

Specifications

Accuracy	2 µm
Repeatability	0,5 µm

Standard accessories

No.	Description
21DZA213A	Carbide Tipped Anvil Series 511, Range 18 mm
21DZA213B	Carbide Tipped Anvil Series 511, Range 20 mm
21DZA213C	Carbide Tipped Anvil Series 511, Range 22 mm
21DZA213D	Carbide Tipped Anvil Series 511, Range 24 mm
21DZA213E	Carbide Tipped Anvil Series 511, Range 26 mm
21DZA213F	Carbide Tipped Anvil Series 511, Range 28 mm
21DZA213G	Carbide Tipped Anvil Series 511, Range 30 mm
21DZA213H	Carbide Tipped Anvil Series 511, Range 32 mm
21DZA213J	Carbide Tipped Anvil Series 511, Range 34 mm
21DZA232A	Carbide Tipped Anvil Series 511, Range 50mm (100mm)
21DZA232B	Carbide Tipped Anvil Series 511, Range 40mm, 55mm (105mm)
21DZA232C	Carbide Tipped Anvil Series 511, Range 45mm, 60mm (110mm)
21DZA232D	Carbide Tipped Anvil Series 511, Range 50mm, 65mm (115mm)
21DZA232E	Carbide Tipped Anvil Series 511, Range 55mm, 70mm (120mm)
21DZA232F	Carbide Tipped Anvil Series 511, Range 60mm, 75mm (125mm)
21DZA232G	Carbide Tipped Anvil Series 511, Range 80mm (130mm)
21DZA232H	Carbide Tipped Anvil Series 511, Range 85mm (135mm)
21DZA232J	Carbide Tipped Anvil Series 511, Range 90mm (140mm)
21DZA232L	Carbide Tipped Anvil Series 511, Range 95mm (145mm)
21DZA232M	Carbide Tipped Anvil Series 511, Range 100mm (150mm)
205457	Washer Series 511, 0,5mm, Range 35-160mm
205458	Washer Series 511, 1 mm, Range 35-160mm
205459	Washer Series 511, 2 mm, Range 35-160mm
205460	Washer Series 511, 3 mm, Range 35-160mm
205623	Washer Series 511, 0,5mm, Range 18-35mm
205624	Washer Series 511, 1mm, Range 18-35mm
102178	Sub-Anvil Series 511, 50 mm

All products to be sold to commercial customers. Product illustrations are without obligation. Product descriptions, in particular any and all technical specifications, are only binding when explicitly agreed upon. For suggested retail prices, please refer to the separate price list.

Bore Gauge with Micrometer Head

Series 511

This is a micrometer head that enables measurements without interchangeable anvils.
It offers you the following benefits:
- A long plunger stroke gives you amazing accuracy.
- Contact points are carbide (> 18mm range), giving you high durability and wear resistance.
- A large grip reduces heat transfer from the operator by 50%.
- Wide measuring range with sub-anvils.

Specifications

Accuracy	2 µm
Repeatability	0,5 µm
Delivered	Including box, dial indicator, plastic cover for indicator

Optional accessories

No.	Description
953552	Extension Rod Series 511, 125mm, 12mm rod diameter
953553	Extension Rod Series 511, 250mm, 12mm rod diameter
953554	Extension Rod Series 511, 500mm, 12mm rod diameter
953555	Extension Rod Series 511, 750mm, 12mm rod diameter
953556	Extension Rod Series 511, 1000mm, 12mm rod diameter
953557	Extension Rod Series 511, 125mm, 15mm rod diameter
952361	Extension Rod Series 511, 250mm, 15mm rod diameter
953558	Extension Rod Series 511, 500mm, 15mm rod diameter
953559	Extension Rod Series 511, 750mm, 15mm rod diameter
953560	Extension Rod Series 511, 1000mm, 15mm rod diameter
543-310B	Digital Indicator Bore Gauge ID-C, 12,7mm, 0,001mm, Flat Back

543-310B

For details on indicators suitable for use with this instrument, refer to the Dial Gauges section.
For a description of replacement contact points, see the Spare Parts section at end of catalogue.

511-814

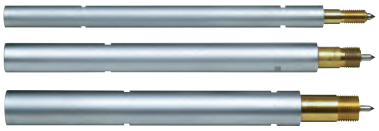

Extensions for deep-hole measurement (optional accessory)

Metric

No.	Range [mm]	Graduation	No. Dial Indicator	Micrometer Head stroke	Sub anvils	Measuring depth	Mass [g]
511-823	60-100	0,001 mm	2109SB-10	10 mm	10, 20 mm	150 mm	430
511-824	100-160	0,001 mm	2109SB-10	13 mm	10, 20, 20 mm	150 mm	480
511-825	150-250	0,001 mm	2109SB-10	13 mm	10, 20, 20, 50 mm	150 mm	850
511-826	250-400	0,001 mm	2109SB-10	25 mm	25, 50, 50 mm	150 mm	950
511-827	400-600	0,001 mm	2109SB-10	50 mm	50, 100 mm	250 mm	1270
511-828	600-800	0,001 mm	2109SB-10	50 mm	50, 100 mm	250 mm	1670
511-813	60-100	0,01 mm	2046SB	10 mm	10, 20 mm	150 mm	430
511-814	100-160	0,01 mm	2046SB	13 mm	10, 20, 20 mm	150 mm	480
511-815	150-250	0,01 mm	2046SB	13 mm	10, 20, 20, 50 mm	150 mm	850
511-816	250-400	0,01 mm	2046SB	25 mm	25, 50, 50 mm	150 mm	950
511-817	400-600	0,01 mm	2046SB	50 mm	50, 100 mm	250 mm	1270
511-818	600-800	0,01 mm	2046SB	50 mm	50, 100 mm	250 mm	1670

Also available! Inch Models

All products to be sold to commercial customers. Product illustrations are without obligation. Product descriptions, in particular any and all technical specifications, are only binding when explicitly agreed upon. For suggested retail prices, please refer to the separate price list.

Bore Gauge with Micrometer Head

Series 511

Dimensions

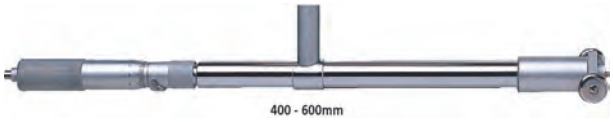

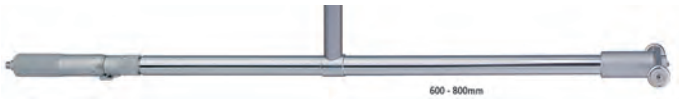

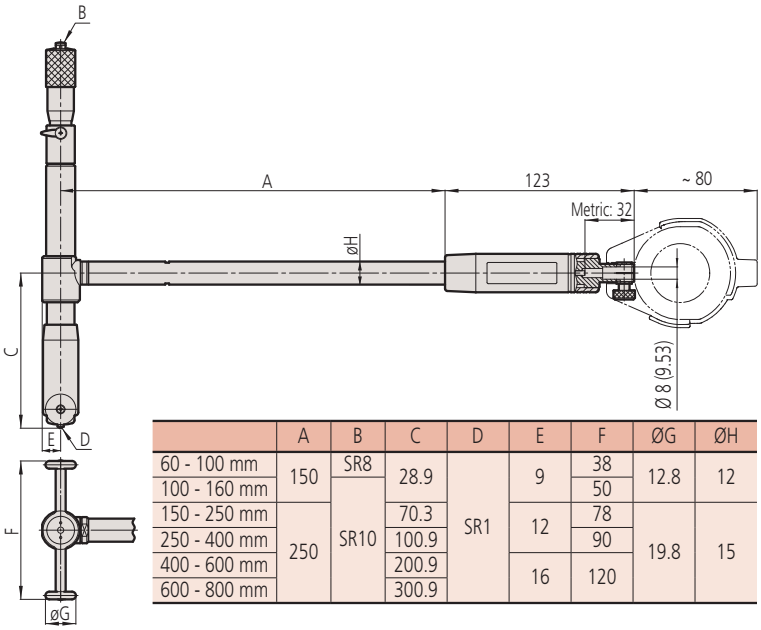

	A	B	C	D	E	F	ØG	ØH
60 - 100 mm	150	SR8	28.9	SR1	9	38	12.8	12
100 - 160 mm						50		
150 - 250 mm	250	SR10	70.3		12	78	19.8	15
250 - 400 mm			100.9			90		
400 - 600 mm			200.9		16	120		
600 - 800 mm			300.9					

60 - 100 mm

100 - 160 mm

150 - 250 mm

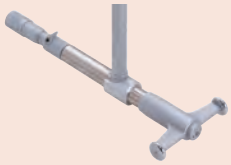

250 - 400 mm

Extension Rods

Accessories for Bore Gauges

These extension rods help you with deep-hole measurement, and offer you the following benefits:

- Using a single, longer extension rod rather than several short ones reduces error. When several extension rods are joined together there is the possibility of small errors arising from the extra joints involved. Therefore it is good practice not to connect more than 2 rods to a bore gauge at any one time.
- You can use extension rods up to 1000mm.
- If you are using an extension rod longer than 500mm, use the bore gauge in the vertical orientation.
- You can confirm accurate and satisfactory operation after connecting an extension rod.

Applicable Range	1. 125 mm	2. 250 mm	3. 500 mm	4. 750 mm	5. 1000 mm
	No.	No.	No.	No.	No.
A. 18-35 mm	953549	953550	953551	—	—
B. 35-160 mm	953552	953553	953554	953555	953556
C. 150-800 mm	953557	952361	953558	953559	953560

Specifications

Extension rod diameter	ø9 mm (range 18-35 mm) ø12 mm (range 35-160 mm) ø15 mm (range 150-800 mm)

953549

953552

953557

All products to be sold to commercial customers. Product illustrations are without obligation. Product descriptions, in particular any and all technical specifications, are only binding when explicitly agreed upon. For suggested retail prices, please refer to the separate price list.

Bore Gauge Short Length Type

Series 511

This is a compact and lightweight bore gauge due to the short length below the grip.
It offers you the following benefits:
- A long plunger stroke gives you amazing accuracy.
- Contact points are carbide giving you high durability and wear resistance.
- A large grip reduces heat transfer from the operator by 50%.

Specifications

Accuracy	2 µm
Repeatability	0,5 µm
Stroke of contact point	18 - 60 mm: 1,2 mm 50 - 160 mm: 1,6 mm
Delivered	Including box, dial indicator, plastic cover for indicator

Optional accessories

No.	Description
543-310B	Digital Indicator Bore Gauge ID-C, 12,7mm, 0,001mm, Flat Back

543-310B

For details of indicators suitable for use with this instrument, refer to the Dial Gauges section.
For a description of replacement contact points, see the Spare Parts section at end of catalogue.

511-766

Metric

No.	Range [mm]	Graduation	No. Dial Indicator	Measuring depth	Number of anvils	Mass [g]
511-771	18-35	0,001 mm	2109SB-10	50 mm	9	320
511-772	35-60	0,001 mm	2109SB-10	50 mm	6	380
511-773	50-150	0,001 mm	2109SB-10	50 mm	11	400
511-774	100-160	0,001 mm	2109SB-10	50 mm	13	460
511-766	18-35	0,01 mm	2046SB	50 mm	9	320
511-767	35-60	0,01 mm	2046SB	50 mm	6	380
511-768	50-150	0,01 mm	2046SB	50 mm	11	400
511-769	100-160	0,01 mm	2046SB	50 mm	13	460

Also available! Inch Models

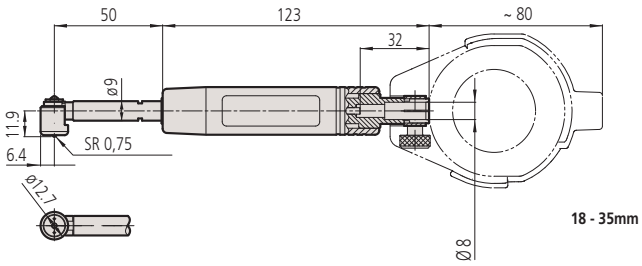

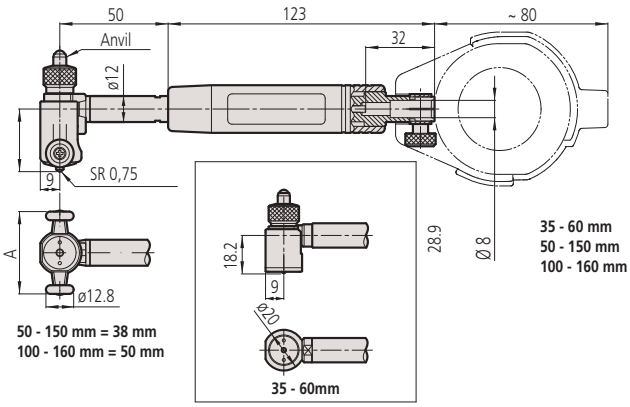

All products to be sold to commercial customers. Product illustrations are without obligation. Product descriptions, in particular any and all technical specifications, are only binding when explicitly agreed upon. For suggested retail prices, please refer to the separate price list.

Mitutoyo

Bore Gauge for Blind Holes

Series 511

This is a bore gauge for measuring blind holes that offers you the following benefits:
- You can measure the inside diameter close to the bottom of blind holes.
- Contact points are carbide giving you high durability and wear resistance.

511-427

511-426

Metric

No.	Range [mm]	Graduation	No. Dial Indicator	Measuring depth	a [mm]	b [mm]	Mass [g]
511-425	15-35	0,01 mm	2046SB	150 mm	9,9	10,6	350
511-426	35-60	0,01 mm	2046SB	150 mm	14,3	18	370
511-427	50-150	0,01 mm	2046SB	150 mm	22,7	22	380
511-435	15-35	0,001 mm	2109SB	150 mm	9,9	10,6	350
511-436	35-60	0,001 mm	2109SB	150 mm	14,3	18	370
511-437	50-150	0,001 mm	2109SB	150 mm	22,7	22	380

Also available! Inch Models

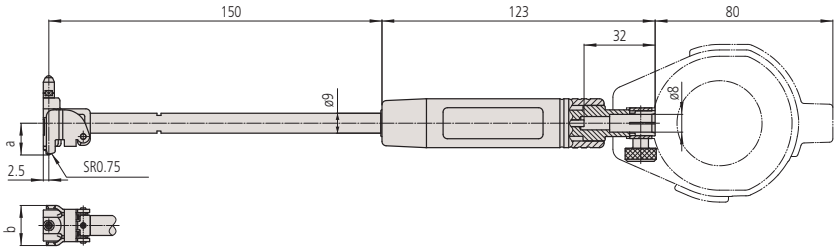

Specifications

Accuracy	4 µm
Repeatability	1 µm
Stroke of contact point	1,2 mm
Delivered	Including box, dial indicator, plastic cover for indicator

Optional accessories

No.	Description
543-310B	Digital Indicator Bore Gauge ID-C, 12,7mm, 0,001mm, Flat Back
953549	Extension Rod Series 511, 125mm, 9mm rod diameter
953550	Extension Rod Series 511, 250mm, 9mm rod diameter
953551	Extension Rod Series 511, 500mm, 9mm rod diameter

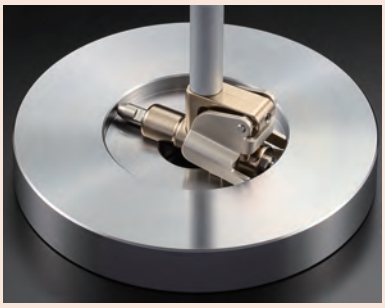

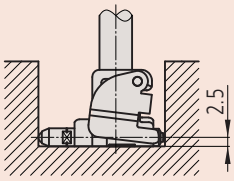

For blind holes with minimum depth 2,5 mm

15 - 35 mm

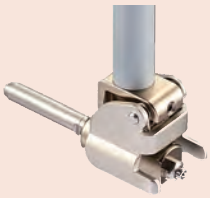

35 - 60 mm

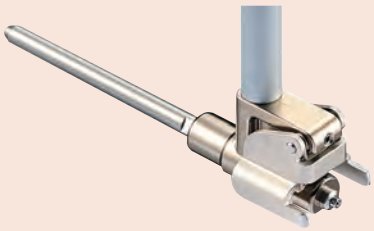

50 - 150 mm

For details on indicators suitable for use with this instrument, refer to the Dial Gauges section.
For a description of replacement contact points, see the Spare Parts section at end of catalogue.

All products to be sold to commercial customers. Product illustrations are without obligation. Product descriptions, in particular any and all technical specifications, are only binding when explicitly agreed upon. For suggested retail prices, please refer to the separate price list.

ABSOLUTE Digimatic Bore Gauge

Functions	Series 511
PRESET (x3)	●
GO/±NG judgement	●
Digimatic data output	●
ON/OFF	●
DATA/HOLD	●
MIN Value Hold	●

Specifications

Accuracy	0,003 mm (excluding quantizing error)
Digital step	0,001 mm
Repeatability	±1 digit
Measuring force	≤5 N
Sampling Frequency	50 times/sec*
Stroke of contact point	1,2 mm
Power supply	2 batteries SR-44
Battery life	approx. 2000 hours
Display	LCD Character Height 7,5 mm

Optional accessories

No.	Description
21DZA081	Extension Rod, Series 511, 500mm
21DZA089	Extension Rod, Series 511, 250mm
905338	Digimatic Cable, Flat Straight Type, 1m
905409	Digimatic Cable, Flat Straight Type, 2 m
02AZD790F	U-WAVE T Connection Cable F, Flat Straight Type
06ADV380F	USB Input Tool Direct (Digimatic USB) cable, 2m, Flat Straight Type

Consumable spares

No.	Description
938882	Battery SR44 1.5V

The ABSOLUTE Digimatic Bore Gauge detects the minimum value (true diameter) and holds it automatically.

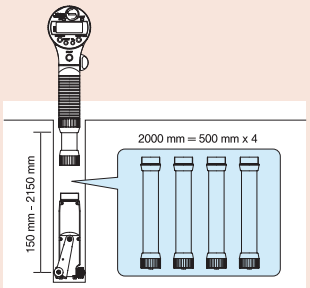

Four extension rods (500 mm each) connected together provide a 2 m extension.

*if the detecting speed is > 50 µm/s the peak value may not be displayed correctly

Series 511

ABSOLUTE IP53

This is a Digimatic bore gauge that lets you take digital inside measurements with amazing accuracy even at the maximum 2m depth.
The ABSOLUTE Digimatic Bore Gauge offers you the following benefits:

- Precision bore gauge lets you easily measure the diameter of deep bores without loss of accuracy.
- You can store and recall up to 3 sets of master values and upper/lower tolerance values at the push of a button.
- GO/±NG judgement can be set.
- Up to max. four extension rods (250 or 500mm) can be used.

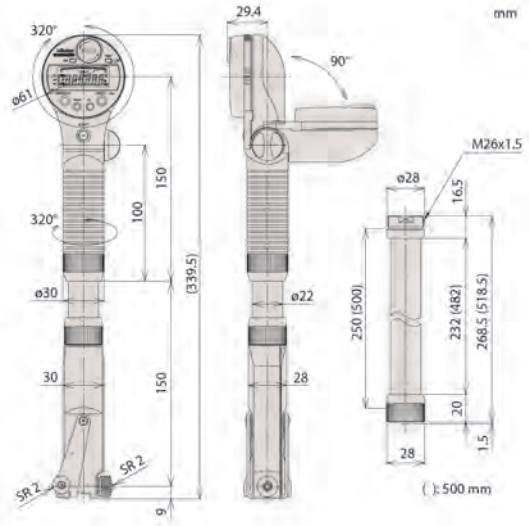

511-501

Metric

No.	Range [mm]	Number of anvils	Mass [g]
511-501	45-100	12	500
511-502	100-160	13	570

Also available! Inch/Metric Models

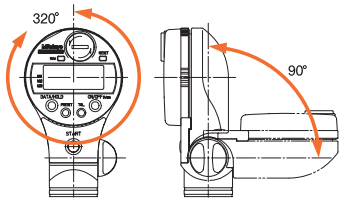

The display can be rotated 320° and turned 90°. The handle can also be rotated 320°.

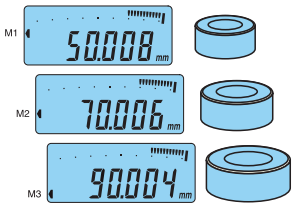

Up to 3 sets of reference values can be preset, including top/bottom tolerance limits.

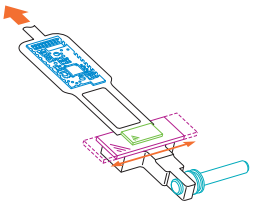

Even during measurement with a 2 m extension the accuracy is secured, as measured-value transmission is electronic.

All products to be sold to commercial customers. Product illustrations are without obligation. Product descriptions, in particular any and all technical specifications, are only binding when explicitly agreed upon. For suggested retail prices, please refer to the separate price list.

Mitutoyo

Bore Gauge Checker

Series 515

- For setting 2-point bore gauges series 511.
- The Bore Gauge Checker allows easy setting of dial bore gauges with ranges of 18 mm through 400 mm using gauge blocks.

515-590
+ gauge block (optional)

Inch/Metric

No.	Applicable Range	Mass [kg]
515-590	18-400 mm	4,51

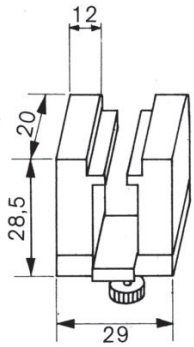

940088

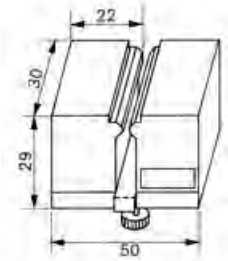

940089

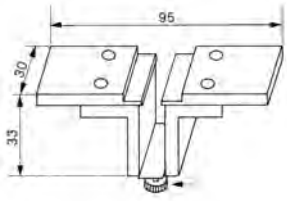

940090

Specifications

Delivered	Delivery as complete set in soft box

Standard accessories

No.	Description
940088	Receiver for Bore Gauge Checker, 18-35mm/35-60mm
940089	Receiver for Bore Gauge Checker, 50-100mm/100-160mm
940090	Receiver for Bore Gauge Checker, 100-250mm/250-400mm
630030	Flat Jaws for Bore Gauge Checker, 2 pcs.

All products to be sold to commercial customers. Product illustrations are without obligation. Product descriptions, in particular any and all technical specifications, are only binding when explicitly agreed upon. For suggested retail prices, please refer to the separate price list.

Gauge Set

Specifications

Delivered	Including plastic wallet

Series 154 - Small Hole Gauge Set

– Designed to be locked in position (with knurled lockscrew) and the diameter measured across the two lobes with a micrometer after withdrawal from the hole.

154-902

Metric

No.	Gauges included	Range	l mm	L [mm]	Ø d [mm]	Ø D	Mass
154-902	154-101	3-5 mm	22,5	90	5,5	2,8-5,2	12
	154-102	5-7,5 mm	30	97,6	5,5	4,8-7,8	13
	154-103	7,5-10 mm	40	108	8,5	7,3-10,3	29
	154-104	10-13 mm	40	108	8,5	9,8-13,2	30

Also available! Inch Models

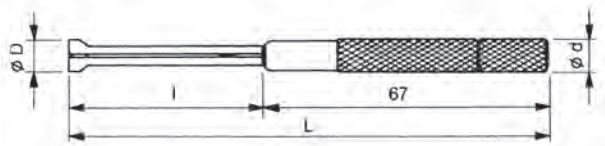

Specifications

Delivered	Including plastic wallet

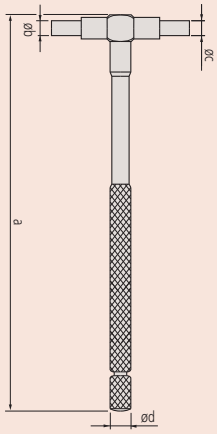

Series 155 - Telescopic Gauge Set

– Self-centering and satin chrome finish.
– Constant spring force on to the measuring surface. Locked in position by knurled lockscrew.

155-905

Metric

No.	Gauges included	Range	a [mm]	b [mm]	c [mm]	d [mm]	Mass
155-905	155-127	8-12,7 mm	110	4	3	5	15
	155-128	12,7-19 mm	110	5	3,5	5,5	25
	155-129	19-32 mm	110	5	3,5	5,5	35
	155-130	32-54 mm	150	7,5	6	8	75
	155-131	54-90 mm	150	7,5	6	8	80
	155-132	90-150 mm	150	7,5	6	8	100

Also available! Inch Models

All products to be sold to commercial customers. Product illustrations are without obligation. Product descriptions, in particular any and all technical specifications, are only binding when explicitly agreed upon. For suggested retail prices, please refer to the separate price list.

Mitutoyo

Setting Rings

Series 177

Metric

No.	Material	Nominal size ød	Type	Ø D [mm]	Ø E [mm]	T [mm]
177-220	Steel	1 mm	A	20		4
177-222	Steel	1,1 mm	A	20		4
177-225	Steel	1,2 mm	A	20		4
177-227	Steel	1,3 mm	A	20		4
177-230	Steel	1,4 mm	A	20		4
177-236	Steel	1,75 mm	A	25		5
177-239	Steel	2 mm	A	25		5
177-242	Steel	2,25 mm	A	25		5
177-208	Steel	2,5 mm	A	25		7
177-246	Steel	2,75 mm	A	25		7
177-248	Steel	3 mm	A	25		7
177-250	Steel	3,25 mm	A	25		7
177-252	Steel	3,5 mm	A	25		7
177-255	Steel	3,75 mm	A	25		7
177-204	Steel	4 mm	A	25		7
177-418	Ceramic	4 mm	A	25		7
177-257	Steel	4,5 mm	A	25		7
177-205	Steel	5 mm	A	25		7
177-263	Steel	5,5 mm	A	25		7
177-267	Steel	6 mm	A	25		7
177-420	Ceramic	6 mm	A	25		7
177-271	Steel	6,5 mm	A	25		7
177-275	Steel	7 mm	A	25		7
177-125	Steel	8 mm	A	32		10
177-423	Ceramic	8 mm	A	32		10
177-279	Steel	9 mm	A	32		10
177-126	Steel	10 mm	A	32		10
177-424	Ceramic	10 mm	A	32		10
177-284	Steel	12 mm	A	32		10
177-425	Ceramic	12 mm	A	32		10
177-132	Steel	14 mm	A	38		10
177-177	Steel	16 mm	A	45		10
177-427	Ceramic	16 mm	A	45		10
177-133	Steel	17 mm	A	45		10
177-285	Steel	18 mm	A	45		10
177-286	Steel	20 mm	A	45		10
177-429	Ceramic	20 mm	A	45		10
177-139	Steel	25 mm	A	53		15
177-430	Ceramic	25 mm	A	53		15
177-288	Steel	30 mm	A	71		15
177-431	Ceramic	30 mm	A	71		15
177-140	Steel	35 mm	A	71		15
177-432	Ceramic	35 mm	A	71		15
177-290	Steel	40 mm	A	71		15
177-433	Ceramic	40 mm	A	71		15
177-178	Steel	45 mm	A	85		15
177-434	Ceramic	45 mm	A	85		15
177-146	Steel	50 mm	A	85		20
177-292	Steel	60 mm	A	112		20
177-314	Steel	62 mm	A	112		20
177-147	Steel	70 mm	A	112		20
177-316	Steel	75 mm	A	125		25
177-294	Steel	80 mm	A	125		25
177-318	Steel	87 mm	A	140		25
177-148	Steel	90 mm	A	140		25
177-296	Steel	100 mm	A	160		25
177-298	Steel	125 mm	B	210	168	38,1
177-300	Steel	150 mm	B	235	187	38,1
177-302	Steel	175 mm	B	260	215	38,1
177-304	Steel	200 mm	B	311	244	38,1
177-306	Steel	225 mm	B	337	264	38,1
177-308	Steel	250 mm	B	362	290	38,1
177-310	Steel	275 mm	B	413	321	38,1
177-312	Steel	300 mm	B	438	340	38,1

Specifications

Cylindricity	1 µm for ø1-60 mm 1,5 µm for ø62-90 mm 2 µm for ø100-150 mm 2,5 µm for ø175-225 mm 3 µm for ø250-300 mm

177-424

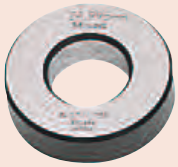

177-139

177-432

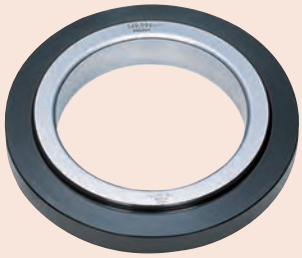

177-300

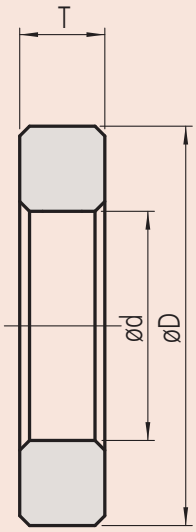

Type A

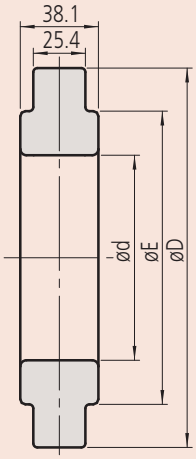

Type B

Tolerance from nominal diameter is ±0,01 mm up to 45 mm, and ± 0,02 mm above. The calibrated diameter of each ring is marked on its upper face.

All products to be sold to commercial customers. Product illustrations are without obligation. Product descriptions, in particular any and all technical specifications, are only binding when explicitly agreed upon. For suggested retail prices, please refer to the separate price list.

Calipers

Absolute Digimatic Caliper
Page 166

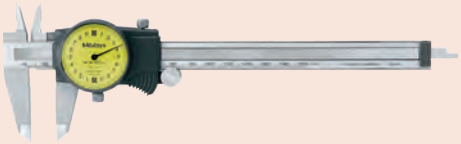

Analog Caliper
Page 180

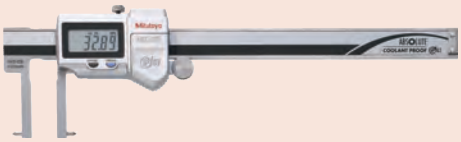

Special Puropose Caliper
Page 187

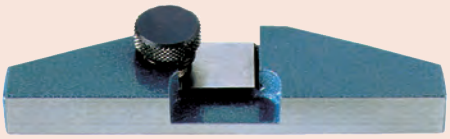

Caliper Accessories
Page 203

All products to be sold to commercial customers. Product illustrations are without obligation. Product descriptions, in particular any and all technical specifications, are only binding when explicitly agreed upon. For suggested retail prices, please refer to the separate price list.

ABSOLUTE Coolant Proof Caliper IP67

Series 500

These robust calipers allow reliable measurements in a wide range of situations.
The ABSOLUTE Digimatic Caliper IP67 offers you the following benefits:

- Excellent resistance against water and dust (IP67 protection level) enabling use in machining situations that include splashing coolant fluid.
- Dustproof, complies with EN60529 withstands temporary complete immersion in water without suffering any damage
- Extraordinarily long battery life.

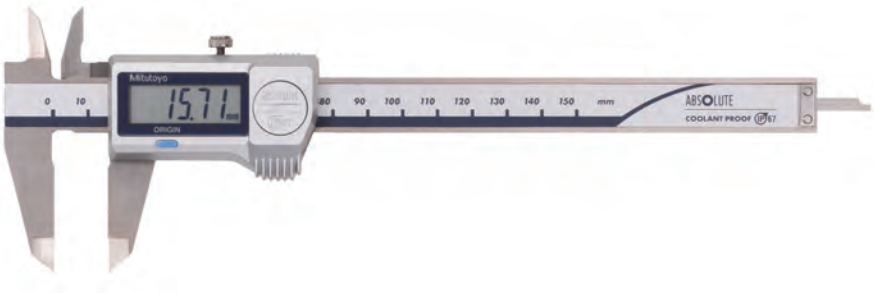

500-706-20

Metric — Without thumb roller

No.	Range [mm]	Depth bar	Data output	L [mm]	a [mm]	b [mm]	c [mm]	d [mm]	Mass [g]
500-706-20	0-150	flat		233	40	21	16,5	16	164
500-709-20	0-150	Ø 1,9 mm		233	40	21	16,5	16	164
500-716-20	0-150	flat	●	233	40	21	16,5	16	164
500-707-20	0-200	flat		290	50	24,5	20	16	194
500-717-20	0-200	flat	●	290	50	24,5	20	16	194
500-708-11	0-300	flat		404	64	27,5	21,8	20	345
500-718-11	0-300	flat	●	404	64	27,5	21,8	20	345

Metric — With thumb roller

No.	Range [mm]	Depth bar	Data output	L [mm]	a [mm]	b [mm]	c [mm]	d [mm]	Mass [g]
500-702-20	0-150	flat		233	40	21	16,5	16	164
500-712-20	0-150	flat	●	233	40	21	16,5	16	164
500-719-20	0-150	Ø 1,9 mm	●	233	40	21	16,5	16	164
500-703-20	0-200	flat		290	50	24,5	20	16	194
500-713-20	0-200	flat	●	290	50	24,5	20	16	194
500-704-10	0-300	flat		404	64	27,5	21,8	20	345
500-714-10	0-300	flat	●	404	64	27,5	21,8	20	345

Also available! Inch/Metric Models

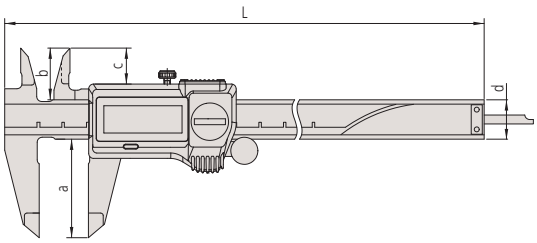

Functions	Series 500
ORIGIN (ABS-Zero)	●
Auto Power OFF after 20 min. non use	●
Low voltage alarm	●

Specifications

Accuracy	≤ 200 mm : ±0,02 mm > 200 mm : ±0,03 mm (excluding quantizing error)
Digital step	0,01 mm
Max. response speed	Unlimited
Battery life	approx. 5 years (150 mm ,200 mm) 5000 hours (300 mm)
Display	LCD, Character Height 9 mm (150, 200 mm) 10,2 mm (300 mm)
Delivered	In a case, including 1 battery

Optional accessories

No.	Description
05CZA624	Digimatic Cable with Data Button IP Type, 1m, Caliper Type
05CZA625	Digimatic Cable with Data Button IP Type, 2m, Caliper Type
02AZD790A	U-WAVE T Connection Cable A, with Data Button IP Caliper Type
06ADV380A	USB Input Tool Direct (Digimatic USB), with Data Button IP Caliper Type
050083-10	Depth Base Attachment for Caliper, 75mm width, for 100, 150, 200mm range
050084-10	Depth Base Attachment for Caliper, 100 mm width, for 100mm, 100, 150, 200mm range
050085-10	Depth Base Attachment for Caliper, 125 mm width, for 300mm range

Consumable spares

No.	Description
938882	Battery SR44 1.5V

Beam 150 and 200 mm or 300 mm

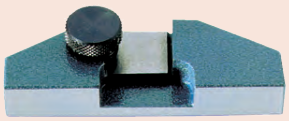

050083-10

All products to be sold to commercial customers. Product illustrations are without obligation. Product descriptions, in particular any and all technical specifications, are only binding when explicitly agreed upon. For suggested retail prices, please refer to the separate price list.

ABSOLUTE Coolant Proof Caliper IP67 with Carbide Tipped Jaws

Functions	Series 500
ORIGIN (ABS-Zero)	●
Auto Power OFF after 20 min. non use	●
Low voltage alarm	●

Specifications

Accuracy	≤ 200 mm : ±0,02 mm > 200 mm : ±0,03 mm (excluding quantizing error)
Digital step	0,01 mm
Max. response speed	Unlimited
Depth bar	Flat
Battery life	approx. 5 years
Display	LCD, Character height 9 mm
Delivered	In a case, including 1 battery

Optional accessories

No.	Description
05CZA624	Digimatic Cable with Data Button IP Type, 1m, Caliper Type
05CZA625	Digimatic Cable with Data Button IP Type, 2m, Caliper Type
02AZD790A	U-WAVE T Connection Cable A, with Data Button IP Caliper Type
06ADV380A	USB Input Tool Direct (Digimatic USB), with Data Button IP Caliper Type
050083-10	Depth Base Attachment for Caliper, 75mm width, for 100, 150, 200mm range
050084-10	Depth Base Attachment for Caliper, 100 mm width, for 100mm, 100, 150, 200mm range
050085-10	Depth Base Attachment for Caliper, 125 mm width, for 300mm range

Consumable spares

No.	Description
938882	Battery SR44 1.5V

Carbide-tipped jaws

Series 500

These robust calipers have carbide-tipped jaws and allow reliable measurements in a wide range of situations.
The ABSOLUTE Digimatic Carbide Caliper IP67 offers you the following benefits:

- Excellent resistance against water and dust (IP67 protection level) enabling use in machining situations that include splashing coolant fluid.
- Dustproof, complies with EN60529 withstands temporary complete immersion in water without suffering any damage
- Extraordinarily long battery life.

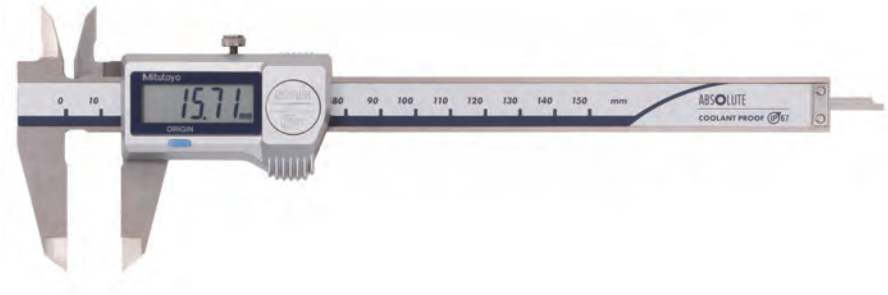

500-727-20

Metric Carbide-tipped jaws for outside/inside measurement

No.	Range [mm]	Data output	Thumb roller	L [mm]	a [mm]	b [mm]	c [mm]	d [mm]	Mass [g]
500-727-20	0-150	●		233	40	21	16,5	16	164
500-723-20	0-150	●	●	233	40	21	16,5	16	168
500-728-20	0-200	●		290	50	24,5	20	16	194
500-724-20	0-200	●	●	290	50	24,5	20	16	198

Metric Carbide-tipped jaws for outside measurement

No.	Range [mm]	Data output	Thumb roller	L [mm]	a [mm]	b [mm]	c [mm]	d [mm]	Mass [g]
500-721-20	0-150	●	●	233	40	21	16,5	16	168
500-722-20	0-200	●	●	290	50	24,5	20	16	198

Also available! Inch/Metric Models

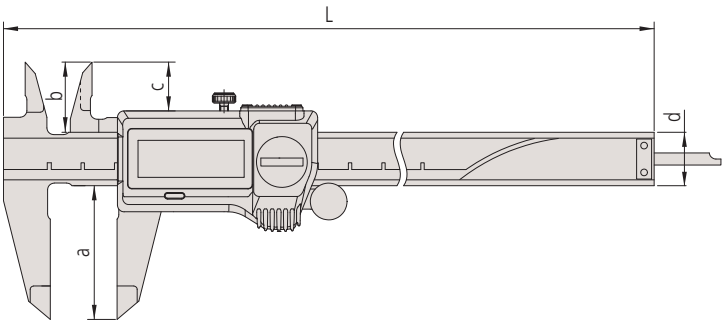

All products to be sold to commercial customers. Product illustrations are without obligation. Product descriptions, in particular any and all technical specifications, are only binding when explicitly agreed upon. For suggested retail prices, please refer to the separate price list.

ABSOLUTE AOS Digimatic Caliper

Series 500

These Digimatic calipers allow you to take reliable measurements and offer you the following benefits:

- Now equipped with the same AOS (Advanced Onsite Sensor) induction type encoder used in top-of-the-line ABS coolant-proof calipers.
- Thanks to the adoption of the electromagnetic induction type ABS encoder, this caliper can be used without concern for contamination on the scale face during measurement. Detection signal is not affected by dirt (water, oil, etc.) on surface of a scale (except 300mm type).
- The slider provides smooth, stable and comfortable operation.
- Character height: 9mm (alleviation of fatigue with the high-contrast LCD)
- The ABS (ABSOLUTE) scale requires no origin setting after power-on and also has no limit to response speed.
- Extraordinary battery life

500-181-30

Metric — Without thumb roller

No.	Range [mm]	Depth bar	Data output	L [mm]	a [mm]	b [mm]	c [mm]	d [mm]	Mass [g]
500-180-30	0-100	Ø 1,9 mm		182	40	21	16,5	16	142
500-201-30	0-100	Ø 1,9 mm	●	182	40	21	16,5	16	143
500-184-30	0-150	Ø 1,9 mm		233	40	21	16,5	16	164
500-203-30	0-150	Ø 1,9 mm	●	233	40	21	16,5	16	168
500-181-30	0-150	flat		233	40	21	16,5	16	164
500-161-30	0-150	flat	●	233	40	21	16,5	16	164
500-182-30	0-200	flat		290	50	24,5	20	16	194
500-162-30	0-200	flat	●	290	50	24,5	20	16	194
500-205	0-300	flat	●	404	64	27,5	22	20	350

Metric — With thumb roller

No.	Range [mm]	Depth bar	Data output	L [mm]	a [mm]	b [mm]	c [mm]	d [mm]	Mass [g]
500-150-30	0-100	Ø 1,9 mm	●	182	40	21	16,5	16	143
500-151-30	0-150	flat	●	233	40	21	16,5	16	164
500-158-30	0-150	Ø 1,9 mm	●	233	40	21	16,5	16	164
500-152-30	0-200	flat	●	290	50	24,5	20	16	194
500-153	0-300	flat	●	404	64	27,5	22	20	350

Also available! Inch/Metric Models

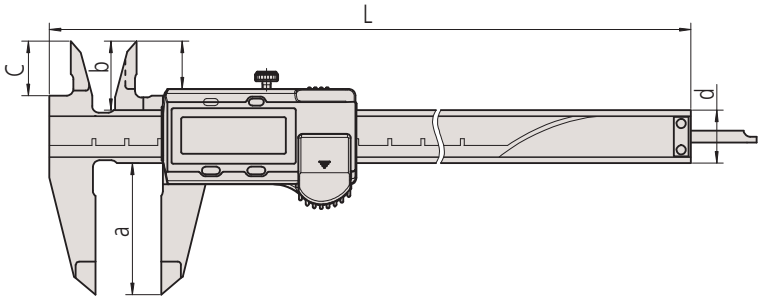

Functions	Series 500
ORIGIN (ABS-Zero)	●
ZERO/ABS	●
ON/OFF	●
Low voltage alarm	●

Specifications

Accuracy	≤ 200 mm : ±0,02 mm /> 200 mm : ±0,03 mm (excluding quantizing error)
Digital step	0,01 mm
Max. response speed	Unlimited
Battery life	approx. 18000 hours
Display	LCD, Character Height 9 mm
Delivered	In a case, including 1 battery

Optional accessories

No.	Description
959149	Digimatic Cable, Straight, Data Button, 1m
959150	Digimatic Cable, Straight, Data Button, 2m
02AZD790C	U-WAVE T Connection Cable C, Straight, with Data Button
06ADV380C	USB Input Tool Direct (Digimatic USB), Straight, with Data Button
959143	Data Hold Unit
050083-10	Depth Base Attachment for Caliper, 75mm width, for 100, 150, 200mm range
050084-10	Depth Base Attachment for Caliper, 100 mm width, for 100mm, 100, 150, 200mm range
050085-10	Depth Base Attachment for Caliper, 125 mm width, for 300mm range

Consumable spares

No.	Description
938882	Battery SR44 1.5V

Round depth bar type

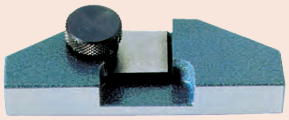

050083-10

Scan QR Code with your mobile device and watch our product videos on YouTube

All products to be sold to commercial customers. Product illustrations are without obligation. Product descriptions, in particular any and all technical specifications, are only binding when explicitly agreed upon. For suggested retail prices, please refer to the separate price list.

ABSOLUTE AOS Digimatic Caliper with Carbide Tipped Jaws

Functions	Series 500
ORIGIN (ABS-Zero)	●
ZERO/ABS	●
ON/OFF	●
Low voltage alarm	●
Depth bar	

Specifications

Accuracy	≤ 200 mm : ±0,02 mm > 200 mm : ±0,03 mm (excluding quantizing error)
Digital step	0,01 mm
Max. response speed	Unlimited
Battery life	approx. 18000 hours
Display	LCD, Character Height 9 mm
Delivered	In a case, including 1 battery

Optional accessories

No.	Description
959149	Digimatic Cable, Straight, Data Button, 1m
959150	Digimatic Cable, Straight, Data Button, 2m
02AZD790C	U-WAVE T Connection Cable C, Straight, with Data Button
06ADV380C	USB Input Tool Direct (Digimatic USB), Straight, with Data Button
959143	Data Hold Unit
050083-10	Depth Base Attachment for Caliper, 75mm width, for 100, 150, 200mm range
050084-10	Depth Base Attachment for Caliper, 100 mm width, for 100mm, 100, 150, 200mm range
050085-10	Depth Base Attachment for Caliper, 125 mm width, for 300mm range

Consumable spares

No.	Description
938882	Battery SR44 1.5V

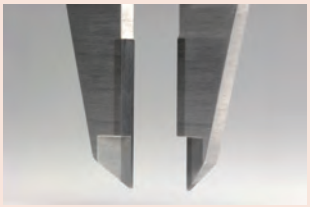

Carbide-tipped jaws

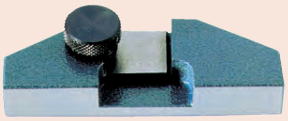

050083-10

Series 500

ABSOLUTE®

These Digimatic calipers have carbide-tipped jaws and allow you to take reliable measurements and offer you the following benefits:

- Thanks to the adoption of the electromagnetic induction type ABS encoder, this caliper can be used without concern for contamination on the scale face during measurement. Detection signal is not affected by dirt (water, oil, etc.) on surface of a scale.
- The slider provides smooth, stable and comfortable operation.
- Character height: 9mm (alleviation of fatigue with the high-contrast LCD)
- The ABS (ABSOLUTE) scale requires no origin setting after power-on and also has no limit to response speed.
- Extraordinary battery life

Metric Carbide-tipped jaws for outside/inside measurement

No.	Range [mm]	Data output	Thumb roller	L [mm]	a [mm]	b [mm]	c [mm]	d [mm]	Mass [g]
500-234-30	0-150	●		233	40	21	16,5	16	168
500-155-30	0-150	●	●	233	40	21	16,5	16	168
500-236-30	0-200	●		290	50	24,5	20	16	198
500-157-30	0-200	●	●	290	50	24,5	20	16	198

Metric Carbide-tipped jaws for outside measurement

No.	Range [mm]	Data output	Thumb roller	L [mm]	a [mm]	b [mm]	c [mm]	d [mm]	Mass [g]
500-233-30	0-150	●		233	40	21	16,5	16	168
500-154-30	0-150	●	●	233	40	21	16,5	16	168
500-235-30	0-200	●		290	50	24,5	20	16	198
500-156-30	0-200	●	●	290	50	24,5	20	16	198

Also available! Inch/Metric Models

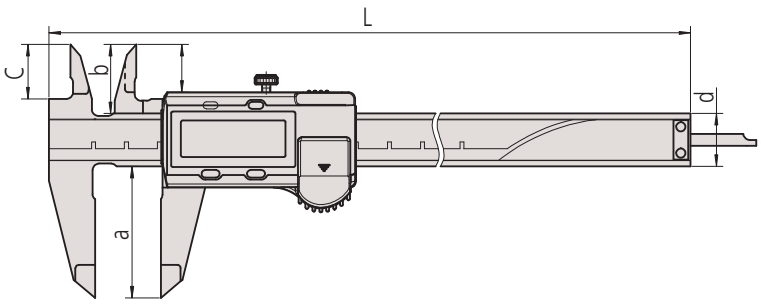

All products to be sold to commercial customers. Product illustrations are without obligation. Product descriptions, in particular any and all technical specifications, are only binding when explicitly agreed upon. For suggested retail prices, please refer to the separate price list.

Mitutoyo

ABSOLUTE Coolant Proof Solar Caliper IP67

Series 500

This solar-powered Digimatic SuperCaliper with ABSOLUTE system is a robust, high performance model.
The ABSOLUTE Digimatic Solar Caliper IP67 offers you the following benefits:

- High Performance Model
- Solar powered, eco-friendly SuperCaliper with ABSOLUTE System needs no battery.
- Operates in only 60 Lux ambient lighting.
- Even if the illumination is temporarily less than 60 lux measuring can be performed by charging a super capacitor.
- It has excellent resistance against water and dust (IP67 protection level) enabling you to use it in machining situations that include splashing coolant fluid.

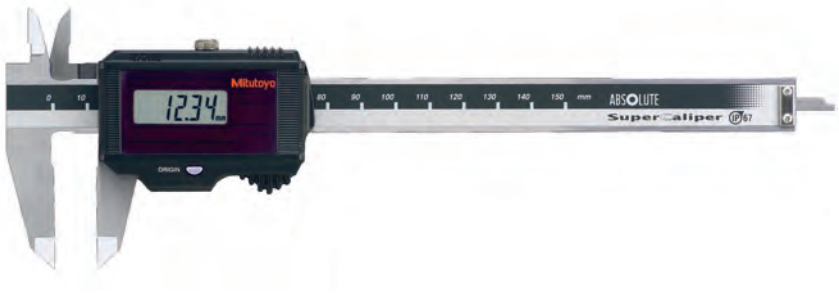

500-772

Functions	Series 500
ORIGIN (ABS-Zero)	●

Specifications

Accuracy	±0,02 mm (excluding quantizing error)
Digital step	0,01 mm
Max. response speed	Unlimited
Power	Solar cell
Display	LCD, Character Height 7,5 mm
Delivered	In a case

Optional accessories

No.	Description
05CZA624	Digimatic Cable with Data Button IP Type, 1m, Caliper Type
05CZA625	Digimatic Cable with Data Button IP Type, 2m, Caliper Type
02AZD790A	U-WAVE T Connection Cable A, with Data Button IP Caliper Type
06ADV380A	USB Input Tool Direct (Digimatic USB), with Data Button IP Caliper Type
050083-10	Depth Base Attachment for Caliper, 75mm width, for 100, 150, 200mm range
050084-10	Depth Base Attachment for Caliper, 100 mm width, for 100mm, 100, 150, 200mm range

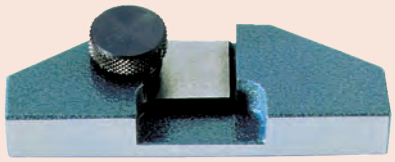

050083-10

Metric — Without thumb roller

No.	Range [mm]	Depth bar	Data output	L [mm]	a [mm]	b [mm]	c [mm]	d [mm]	Mass [g]
500-772	0-150	flat		233	21	16,5	40	16	180
500-792	0-150	Ø 1,9 mm		233	21	16,5	40	16	180
500-778	0-150	flat	●	233	21	16,5	40	16	180
500-773	0-200	flat		290	24,5	20	50	16	210
500-779	0-200	flat	●	290	24,5	20	50	16	210

Metric — With thumb roller

No.	Range [mm]	Depth bar	Data output	L [mm]	a [mm]	b [mm]	c [mm]	d [mm]	Mass [g]
500-774	0-150	flat		233	21	16,5	40	16	180
500-776	0-150	flat	●	233	21	16,5	40	16	180
500-775	0-200	flat		290	24,5	20	50	16	210
500-777	0-200	flat	●	290	24,5	20	50	16	210

Also available! Inch/Metric Models

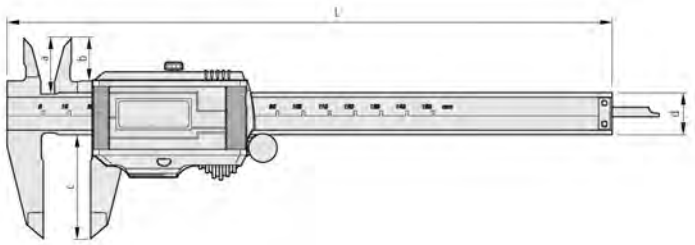

All products to be sold to commercial customers. Product illustrations are without obligation. Product descriptions, in particular any and all technical specifications, are only binding when explicitly agreed upon. For suggested retail prices, please refer to the separate price list.

ABSOLUTE Digimatic Solar Caliper

Functions	Series 500
ORIGIN (ABS-Zero)	●

Specifications

Accuracy	±0,02 mm (excluding quantizing error)
Digital step	0,01 mm
Max. response speed	Unlimited
Power	Solar cell
Display	LCD; Character Height 7,5 mm
Delivered	In a case

Optional accessories

No.	Description
959149	Digimatic Cable, Straight, Data Button, 1m
959150	Digimatic Cable, Straight, Data Button, 2m
02AZD790C	U-WAVE T Connection Cable C, Straight, with Data Button
06ADV380C	USB Input Tool Direct (Digimatic USB), Straight, with Data Button
959143	Data Hold Unit
050083-10	Depth Base Attachment for Caliper, 75mm width, for 100, 150, 200mm range
050084-10	Depth Base Attachment for Caliper, 100 mm width, for 100mm, 100, 150, 200mm range

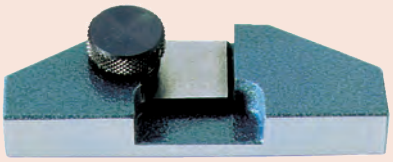

050083-10

Series 500

ABSOLUTE®

This solar-powered Digimatic caliper is a standard model that enables you to take reliable measurements.
The ABSOLUTE Digimatic Solar Caliper offers you the following benefits:
– You can operate it in just 60 Lux ambient lighting.

500-444

500-457

Metric — Without thumb roller

No.	Range [mm]	Depth bar	Data output	L [mm]	a [mm]	b [mm]	c [mm]	Mass [g]
500-457	0-150	flat		233	40	21	16,5	150
500-458	0-200	flat		290	50	24	20	180

Metric — With thumb roller

No.	Range [mm]	Depth bar	Data output	L [mm]	a [mm]	b [mm]	c [mm]	Mass [g]
500-453	0-100	Ø 1,9 mm		182	40	21	16,5	125
500-443	0-100	Ø 1,9 mm	●	182	40	21	16,5	145
500-454	0-150	flat		233	40	21	16,5	150
500-444	0-150	flat	●	233	40	21	16,5	170
500-455	0-200	flat		290	50	24	20	180
500-445	0-200	flat	●	290	50	24	20	200

Also available! Inch/Metric Models

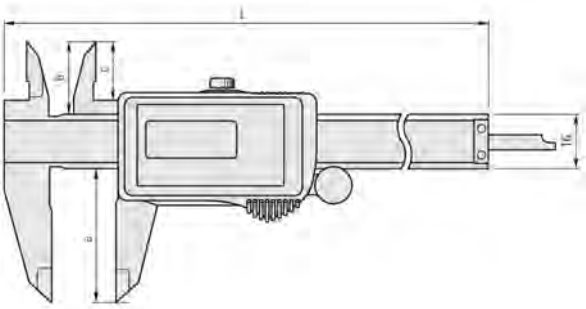

All products to be sold to commercial customers. Product illustrations are without obligation. Product descriptions, in particular any and all technical specifications, are only binding when explicitly agreed upon. For suggested retail prices, please refer to the separate price list.

Mitutoyo

ABSOLUTE Digimatic Caliper for Long Range

Series 500

ABSOLUTE®

This is a standard model of Digimatic High Capacity Caliper that offers you the following benefits:
- It has a robust design for large measuring ranges, up to 1000mm.
- ABSOLUTE System delivers reliable measurements.

500-500-10

Metric

No.	Range [mm]	L [mm]	a [mm]	b [mm]	c [mm]	d [mm]	Mass [g]
500-500-10	0-450	630	90	47	38	25	1170
500-501-10	0-600	780	90	47	38	25	1350
500-502-10	0-1000	1240	130	61	50	32	3300

Also available! Inch/Metric Models

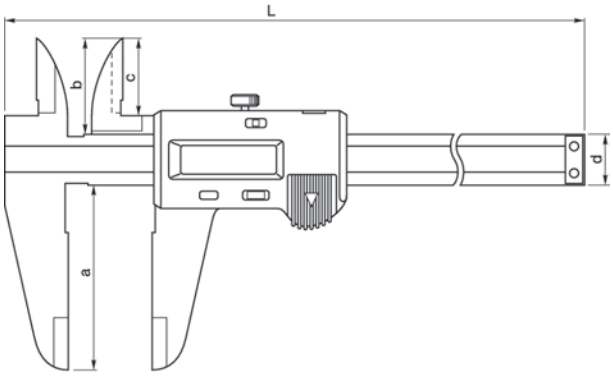

Functions	Series 500
ORIGIN (ABS-Zero)	●
ZERO/ABS	●
ON/OFF	●
Low voltage alarm	●
Data output	●

Specifications

Accuracy	≤ 600 mm : ±0,05 mm ≤ 1000 mm : ±0,07 mm (excluding quantizing error)
Digital step	0,01 mm
Max. response speed	Unlimited
Battery life	approx. 20000 hours
Display	LCD; Character Height 10 mm
Delivered	In a case, including 1 battery

Optional accessories

No.	Description
959149	Digimatic Cable, Straight, Data Button, 1m
959150	Digimatic Cable, Straight, Data Button, 2m
02AZD790C	U-WAVE T Connection Cable C, Straight, with Data Button
06ADV380C	USB Input Tool Direct (Digimatic USB), Straight, with Data Button
959143	Data Hold Unit

Consumable spares

No.	Description
938882	Battery SR44 1.5V

All products to be sold to commercial customers. Product illustrations are without obligation. Product descriptions, in particular any and all technical specifications, are only binding when explicitly agreed upon. For suggested retail prices, please refer to the separate price list.

ABSOLUTE Digimatic Caliper with Nib Style Jaws

Functions	Series 550			
	550-203-10 up to 550-207-10		550-301-20	550-331-10
ORIGIN (ABS-Zero)	●		●	●
OFFSET*			●	●
ON/OFF	●			
Auto Power OFF after 20 min. non use			●	●
Low voltage alarm	●		●	●
Data output	●		●	●
PRESET				●

Series 550

This is a Digimatic caliper with nib-style jaws that lets you measure inside dimensions.
It offers you the following benefits:
- Rounded measuring surfaces enable you to measure inside dimensions.
- ABSOLUTE System delivers reliable measurements.

TÜVRheinland CERTIFIED
Safety Dust- and Water-Protected
www.tuv.com ID 2011207400

200/300 mm

ABSOLUTE®

IP67

550-301-20

Specifications

Accuracy	Refer to the list of specifications (excluding quantizing error)
Digital step	0,01 mm
Max. response speed	Unlimited
Battery life	approx. 5 years (200 mm), 1 year (300 mm), 3,5 years (>300 mm)
Display	LCD, Character Height 9 mm (200 mm) 10,2 mm (300 mm) 10 mm (>300 mm)
Delivered	In a case, including 1 battery

Optional accessories

No.	Description
959149	Digimatic Cable, Straight, Data Button, 1m
959150	Digimatic Cable, Straight, Data Button, 2m
02AZD790C	U-WAVE T Connection Cable C, Straight, with Data Button
06ADV380C	USB Input Tool Direct (Digimatic USB), Straight, with Data Button
959143	Data Hold Unit

Optional accessories for IP67

No.	Description
05CZA624	Digimatic Cable with Data Button IP Type, 1m, Caliper Type
05CZA625	Digimatic Cable with Data Button IP Type, 2m, Caliper Type
02AZD790A	U-WAVE T Connection Cable A, with Data Button IP Caliper Type
06ADV380A	USB Input Tool Direct (Digimatic USB), with Data Button IP Caliper Type

Consumable spares

No.	Description
938882	Battery SR44 1.5V

*10 mm

Metric — IP67 model

No.	Range [mm]	Remarks	Accuracy [mm]	Inside measuring from	L [mm]	a [mm]	b [mm]	c [mm]	Mass [g]
550-301-20	0-200	IP67	±0,03	10,1 mm	290	60	8	16	180
550-331-10	0-300	IP67	±0,04	10,1 mm	403	75	12	20	380

Metric — Non IP67 model

No.	Range [mm]	Accuracy [mm]	Inside measuring from	L [mm]	a [mm]	b [mm]	c [mm]	Mass [g]
550-203-10	0-450	±0,05	20,1 mm	630	100	18	25	1110
550-205-10	0-600	±0,05	20,1 mm	780	100	18	25	1290
550-207-10	0-1000	±0,07	20,1 mm	1240	140	24	32	3350

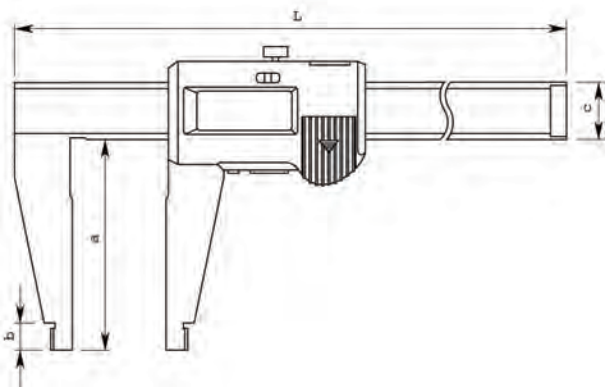

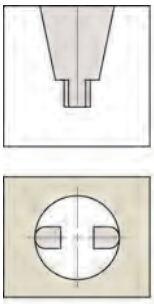

Round surfaces of jaws for measuring inside dimensions

All products to be sold to commercial customers. Product illustrations are without obligation. Product descriptions, in particular any and all technical specifications, are only binding when explicitly agreed upon. For suggested retail prices, please refer to the separate price list.

Mitutoyo

ABSOLUTE Digimatic Caliper with Nib Style and Standard Jaws

Series 551

This is a Digimatic caliper with nib-style and standard jaws.
It offers you the following benefits:
- Knife-shaped measuring surfaces allow you to take outside measurements.
- Rounded measuring surfaces enable you to measure inside dimensions.
- ABSOLUTE System delivers reliable measurements.

Safety Dust- and Water-Protected
www.tuv.com ID 2011207400

200/300 mm

ABSOLUTE

IP67

551-301-20

Metric

IP67 model

No.	Range [mm]	Remarks	Inside measuring from	Accuracy [mm]	L [mm]	a [mm]	b [mm]	c [mm]	d [mm]	Mass [g]
551-301-20	0-200	IP67	10,1 mm	±0,03	290	60	8	30	16	190
551-331-10	0-300	IP67	10,1 mm	±0,04	403	90	10	40	20	420

Metric

Non IP67 model

No.	Range [mm]	Inside measuring from	Accuracy [mm]	L [mm]	a [mm]	b [mm]	c [mm]	d [mm]	Mass [g]
551-204-10	0-500	20,1 mm	±0,06	680	150	18	56	25	1060
551-206-10	0-750	20,1 mm	±0,06	963	150	18	56	25	1410
551-207-10	0-1000	20,1 mm	±0,07	1230	150	20	56	32	3430

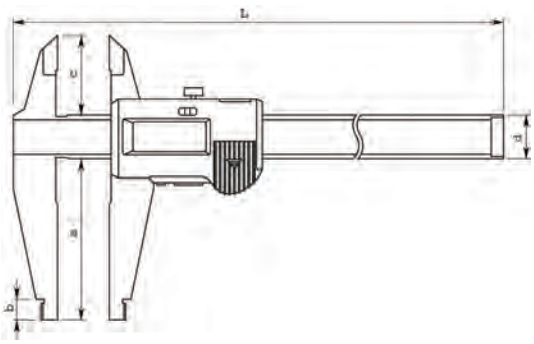

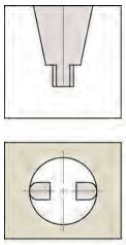

Round surface of jaws for measuring inside dimensions

Functions	Series 551 551-204-10 up to 551-207-10	551-301-20	551-331-10
ORIGIN (ABS-Zero)	●	●	●
OFFSET*		●	●
ON/OFF	●		
Auto Power OFF after 20 min. non use		●	●
Low voltage alarm	●	●	●
Data output	●	●	●
PRESET			●

Specifications

Accuracy	Refer to the list of specifications (excluding quantizing error)
Digital step	0,01 mm
Max. response speed	Unlimited
Battery life	approx. 5 years (200 mm), 1 years (300 mm), 3,5 year (>300 mm)
Display	LCD; Character Height 9 mm (200 mm) 10,2 mm (300 mm) 10 mm (>300 mm)
Delivered	In a case, including 1 battery

Optional accessories

No.	Description
959149	Digimatic Cable, Straight, Data Button, 1m
959150	Digimatic Cable, Straight, Data Button, 2m
02AZD790C	U-WAVE T Connection Cable C, Straight, with Data Button
06ADV380C	USB Input Tool Direct (Digimatic USB), Straight, with Data Button
959143	Data Hold Unit

Optional accessories for IP67

No.	Description
05CZA624	Digimatic Cable with Data Button IP Type, 1m, Caliper Type
05CZA625	Digimatic Cable with Data Button IP Type, 2m, Caliper Type
02AZD790A	U-WAVE T Connection Cable A, with Data Button IP Caliper Type
06ADV380A	USB Input Tool Direct (Digimatic USB), with Data Button IP Caliper Type

Consumable spares

No.	Description
938882	Battery SR44 1.5V

*10 mm

All products to be sold to commercial customers. Product illustrations are without obligation. Product descriptions, in particular any and all technical specifications, are only binding when explicitly agreed upon. For suggested retail prices, please refer to the separate price list.

ABSOLUTE Digimatic Carbon Fibre Caliper IP66

Functions	Series 552
ORIGIN (ABS-Zero)	●
OFFSET*	●
DATA/HOLD	●
Auto Power OFF after 20 min. non use	●
Low voltage alarm	●
Data output	●
PRESET	●

Specifications

Accuracy	Refer to the list of specifications (excluding quantizing error)
Digital step	0,01 mm
Max. response speed	Unlimited
Battery life	approx. 5000 hours
Display	LCD; Character Height 10 mm
Delivered	In a case, including 1 battery

Optional accessories

No.	Description
05CZA624	Digimatic Cable with Data Button IP Type, 1m, Caliper Type
05CZA625	Digimatic Cable with Data Button IP Type, 2m, Caliper Type
02AZD790A	U-WAVE T Connection Cable A, with Data Button IP Caliper Type
06ADV380A	USB Input Tool Direct (Digimatic USB), with Data Button IP Caliper Type
914055	Center to Center Jaws Series 552, 2 pcs., (≥10,1mm) Metric
914057	Inside Groove Jaws Series 552, 2 pcs., Metric
914053	Holders (Clamps) Series 552, 2 pcs., 450 and 600mm Range
914054	Holders (Clamps) Series 552, 2 pcs., >600mm Range

Consumable spares

No.	Description
938882	Battery SR44 1.5V

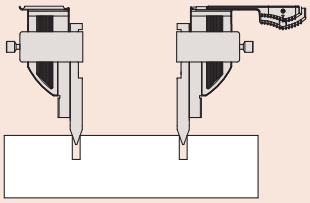

hole center to center

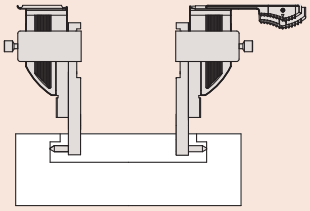

inside goove diameter
* 20mm

Series 552

This is a lightweight standard model of Digimatic caliper with steel jaws.
It offers you the following benefits:

- Its ultra-lightweight design (with carbon fibre reinforced material) reduces total weight by up to 50%.
- It has excellent resistance against water and dust (IP66 protection level) enabling you to use it in machining situations that include splashing coolant fluid.
- Direct readout of inside measurements from the LCD (you can easily set the offset value by using the offset button).
- Preset function lets you set a desired starting point.

552-304-10

Metric

No.	Range [mm]	Accuracy [mm]	Inside measuring from	L [mm]	a [mm]	b [mm]	c [mm]	d [mm]	e [mm]	f [mm]	Mass [g]
552-302-10	0-450	±0,04	20,1 mm	640	100	18	41,2	91,8	25	10	715
552-303-10	0-600	±0,04	20,1 mm	790	100	18	41,2	91,8	25	10	790
552-304-10	0-1000	±0,05	20,1 mm	1230	150	24	62,8	113,8	32	10	1760
552-305-10	0-1500	±0,09	20,1 mm	1740	150	24	62,8	113,8	32	10	2160
552-306-10	0-2000	±0,12	20,1 mm	2250	150	24	62,8	113,8	32	10	2560

Also available! Inch/Metric Models

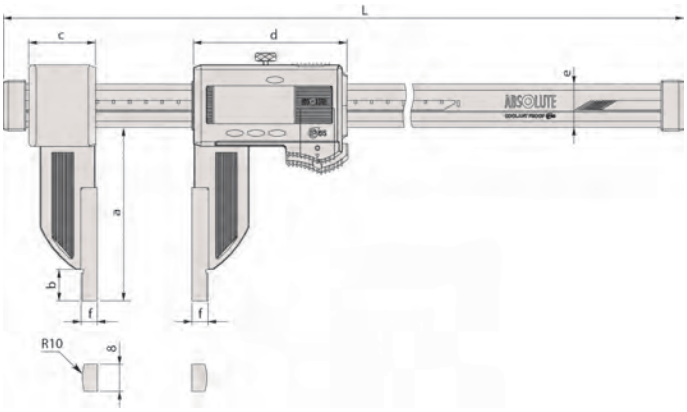

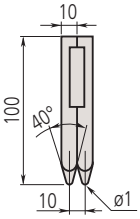

914055

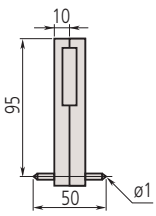

914057

914053

914054

All products to be sold to commercial customers. Product illustrations are without obligation. Product descriptions, in particular any and all technical specifications, are only binding when explicitly agreed upon. For suggested retail prices, please refer to the separate price list.

ABSOLUTE Digimatic Carbon Fibre Caliper IP66 with Ceramic Jaws

Series 552

This is a lightweight standard model of Digimatic caliper with ceramic jaws.
It offers you the following benefits:

- Its ultra-lightweight design (with carbon fibre reinforced material) reduces total weight by up to 50%.
- It has excellent resistance against water and dust (IP66 protection level) enabling you to use it in machining situations that include splashing coolant fluid.
- Direct readout of inside measurements from the LCD (you can easily set the offset value by using the offset button).
- Preset function lets you set a desired starting point.

552-156-10

Metric

No.	Range [mm]	Accuracy [mm]	Inside measuring from	L [mm]	a [mm]	b [mm]	c [mm]	d [mm]	e [mm]	f [mm]	Mass [g]
552-155-10	0-450	±0,04	20,1 mm	640	100	18	41,2	91,8	25	10	715
552-156-10	0-600	±0,04	20,1 mm	790	100	18	41,2	91,8	25	10	790

Also available! Inch/Metric Models

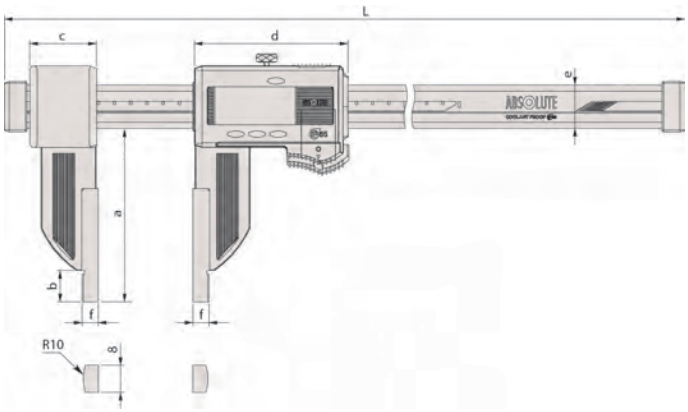

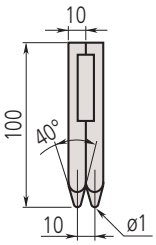

914055

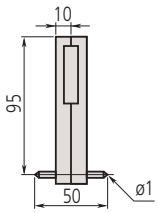

914057

914053

Functions	Series 552
ORIGIN (ABS-Zero)	●
OFFSET*	●
DATA/HOLD	●
Auto Power OFF after 20 min. non use	●
Low voltage alarm	●
Data output	●
PRESET	●

Specifications

Accuracy	Refer to the list of specifications (excluding quantizing error)
Digital step	0,01 mm
Max. response speed	Unlimited
Battery life	approx. 5000 hours
Display	LCD, Character Height 10 mm
Delivered	In a case, including 1 battery

Optional accessories

No.	Description
05CZA624	Digimatic Cable with Data Button IP Type, 1m, Caliper Type
05CZA625	Digimatic Cable with Data Button IP Type, 2m, Caliper Type
02AZD790A	U-WAVE T Connection Cable A, with Data Button IP Caliper Type
06ADV380A	USB Input Tool Direct (Digimatic USB), with Data Button IP Caliper Type
914055	Center to Center Jaws Series 552, 2 pcs., (≥10,1mm) Metric
914057	Inside Groove Jaws Series 552, 2 pcs., Metric
914053	Holders (Clamps) Series 552, 2 pcs., 450 and 600mm Range

Consumable spares

No.	Description
938882	Battery SR44 1.5V

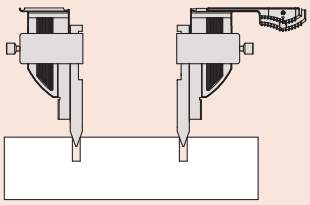

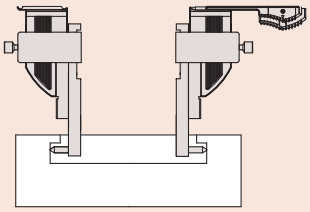

* 20mm

All products to be sold to commercial customers. Product illustrations are without obligation. Product descriptions, in particular any and all technical specifications, are only binding when explicitly agreed upon. For suggested retail prices, please refer to the separate price list.

ABSOLUTE Digimatic Carbon Fibre Caliper IP66 with Extra Long Jaws

Functions	Series 552
ORIGIN (ABS-Zero)	●
OFFSET*	●
DATA/HOLD	●
Auto Power OFF after 20 min. non use	●
Low voltage alarm	●
Data output	●
PRESET	●

Specifications

Accuracy	Refer to the list of specifications (excluding quantizing error)
Digital step	0,01 mm
Max. response speed	Unlimited
Battery life	approx. 5000 hours
Display	LCD, Character Height 10 mm
Delivered	In a case, including 1 battery

Optional accessories

No.	Description
05CZA624	Digimatic Cable with Data Button IP Type, 1m, Caliper Type
05CZA625	Digimatic Cable with Data Button IP Type, 2m, Caliper Type
06ADV380A	USB Input Tool Direct (Digimatic USB), with Data Button IP Caliper Type
02AZD790A	U-WAVE T Connection Cable A, with Data Button IP Caliper Type

Consumable spares

No.	Description
938882	Battery SR44 1.5V

*	metric
≤ 600mm	20mm
≤ 1000mm	20mm

Series 552

This is a lightweight standard model of Digimatic caliper with extra-long jaws.
It offers you the following benefits:

- Its ultra-lightweight design (with carbon fibre reinforced material) reduces total weight by up to 50%.
- It has excellent resistance against water and dust (IP66 protection level) enabling you to use it in machining situations that include splashing coolant fluid.
- Direct readout of inside measurements from the LCD (you can easily set the offset value by using the offset button).
- Preset function lets you set a desired starting point.

552-151-10

Metric

No.	Range [mm]	Accuracy [mm]	Inside measuring from	L [mm]	a [mm]	b [mm]	c [mm]	d [mm]	e [mm]	f [mm]	g [mm]	Mass [g]
552-150-10	0-450	±0,06	20,1 mm	680	173	65,5	89	91,8	25	10	8	1215
552-151-10	0-600	±0,06	20,1 mm	830	173	65,5	89	91,8	25	10	8	1290
552-152-10	0-1000	±0,07	20,1 mm	1280	170,5	73	110	113,8	32	10	12	2090
552-153-10	0-1500	±0,11	20,1 mm	1790	170,5	73	110	113,8	32	10	12	2490
552-154-10	0-2000	±0,14	20,1 mm	2300	170,5	73	110	113,8	32	10	12	2890

Also available! Inch/Metric Models

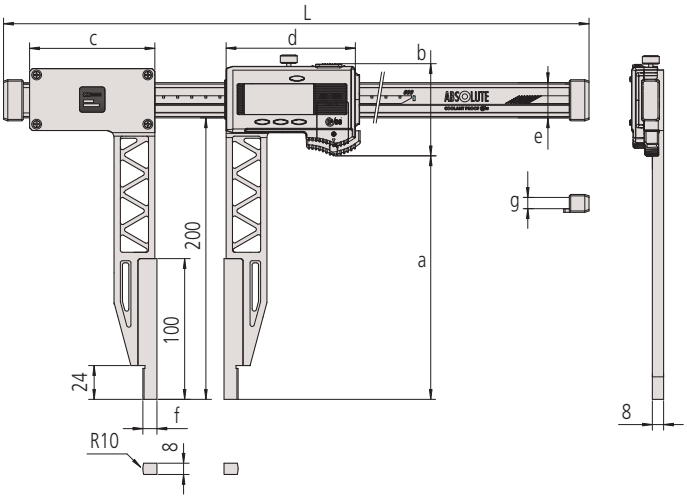

All products to be sold to commercial customers. Product illustrations are without obligation. Product descriptions, in particular any and all technical specifications, are only binding when explicitly agreed upon. For suggested retail prices, please refer to the separate price list.

ABSOLUTE Digimatic Carbon Fibre Caliper IP66 for Interchangeable Jaws/ Scriber

Series 552

This is a lightweight standard model of Digimatic caliper with optional interchangeable jaws.
It offers you the following benefits:

- Its ultra-lightweight design (with carbon fibre reinforced material) reduces total weight by up to 50%.
- It has excellent resistance against water and dust (IP66 protection level) enabling you to use it in machining situations that include splashing coolant fluid.
- Direct readout of inside measurements from the LCD (you can easily set the offset value by using the offset button).
- Preset function lets you set a desired starting point.

TÜVRheinland CERTIFIED
Safety Dust- and Water-Protected
www.tuv.com ID 0000022582

ABSOLUTE®
IP66

552-182-10
with optional accessories 07CZA056

Metric

No.	Range [mm]	Accuracy [mm]	Mass [g]
552-181-10	0-450	±0,04	650
552-182-10	0-600	±0,04	725
552-183-10	0-1000	±0,05	1480
552-184-10	0-1500	±0,09	1880
552-185-10	0-2000	±0,12	2280

Accuracy: without jaws

Also available! Inch/Metric Models
See Digimatic catalogue www.mitutoyo.eu

Standard contact point	Measuring range		**0-450 mm** / 0-18"	**0-650 mm** / 0-24"	**0-1000 mm** / 0-40"	**0-1500 mm** / 0-60"	**0-2500 mm** / 0-80"
	Combination error		**± 0,06** / ± 0.0025"	**± 0,06** / ± 0.0025"	**± 0,07** / ± 0.0030"	**± 0,11** / ± 0.0045"	**± 0,14** / ± 0.0055"
Inside Point type	Measuring range (mm)	IN	**50-500 mm**	**50-650 mm**	**50-1050 mm**	**50-1550 mm**	**50-2550 mm**
		OUT	**0-450 mm**	**0-600 mm**	**0-1000 mm**	**0-1500 mm**	**0-2500 mm**
	Measuring range (in)	IN	**50,8-500,8 mm** / 2-20"	**50,8-650,8 mm** / 2-26"	**50,8-1050,8 mm** / 2-42"	**50,8-1550,8 mm** / 2-62"	**50,8-2550,8 mm** / 2-82"
		OUT	**0-450 mm** / 0-18"	**0-600 mm** / 0-24"	**0-1000 mm** / 0-40"	**0-1500 mm** / 0-60"	**0-2500 mm** / 0-80"
	Combination error		**± 0,09 mm** / ± 0.0035"	**± 0,09 mm** / ± 0.0035"	**± 0,10 mm** / ± 0.0040"	**± 0,14 mm** / ± 0.0055"	**± 0,17 mm** / ± 0.0070"
Centerline type	Measuring range (mm)		**30-480 mm**	**30-630 mm**	**30-1030 mm**	**30-1530 mm**	**30-2030 mm**
	Measuring range (in)		**30,48-480,8 mm** / 1.2-19.2"	**30,48-630,48 mm** / 1.2-25.2"	**30,48-1030,48 mm** / 1.2-41.2"	**30,48-1530,48 mm**	**30,48-2030,48 mm**
	Combination error		**± 0,08 mm** / ± 0.0030"	**± 0,08 mm** / ± 0.0030"	**± 0,09 mm** / ± 0.0035"	**± 0,13 mm** / ± 0.0055"	**± 0,16 mm** / ± 0.0065"
Scriber type	Measuring range (mm)		**30-480 mm**	**30-630 mm**	**30-1030 mm**	**30-1530 mm**	**30-2030 mm**
	Measuring range (in)		**30,48-480,8 mm** / 1.2-19.2"	**30,48-630,48 mm** / 1.2-25.2"	**30,48-1030,48 mm** / 1.2-41.2"	**30,48-1530,48 mm** / 1.2-61.2"	**30,48-2030,48 mm** / 1.2-81.2"
	Combination error		**± 0,10** / ± 0.0040"	**± 0,10** / ± 0.0040"	**± 0,11** / ± 0.0045"	**± 0,15** / ± 0.0060"	**± 0,18** / ± 0.0070"
Surface Plate type + Scriber	Measuring range		**0-450 mm** / 0-17"	**0-600 mm** / 0-23.7"	**0-1000 mm** / 0-39.4"	**0-1500 mm** / 0-59.4"	**0-2500 mm** / 0-79.6"
	Combination error		**± 0,10** / ± 0.0040"	**± 0,10** / ± 0.0040"	**± 0,11** / ± 0.0045"	**± 0,15** / ± 0.0060"	**± 0,18** / ± 0.0070"
Surface Plate type + Inside Point type	Measuring range (mm)		**25-475 mm**	**25-625 mm**	**25-1025 mm**	**25-1525 mm**	**25-2025 mm**
			0-450 mm	**0-600 mm**	**0-1000 mm**	**0-1500 mm**	**0-2000 mm**
	Measuring range (in)		**25,4-475,4 mm** / 1-19"	**25,4-625,4 mm** / 1-24"	**25,4-1025,4 mm** / 1-41"	**25,4-1525,4 mm** / 1-62"	**25,4-2025,4 mm** / 1-81"
			0-450 mm / 0-18"	**0-600 mm** / 0-24"	**0-1000 mm** / 0-40"	**0-1500 mm** / 0-60"	**0-2000 mm** / 0-80"
	Combination error		**± 0,12 mm** / ± 0.0025"	**± 0,12 mm** / ± 0.0050"	**± 0,13 mm** / ± 0.0055"	**± 0,17 mm** / ± 0.0070"	**± 0,20 mm** / ± 0.0080"
Surface Plate type + Center Line type	Measuring range (mm)		**15-465 mm**	**15-615 mm**	**15-1015 mm**	**15-1515 mm**	**15-2015 mm**
			15,254-465,24 mm / 0,6-18.6"	**15,24-615,24 mm** / 0,6-24.6"	**15,24-1015,24 mm** / 0,6-40.6"	**15,24-1515,24 mm** / 0,6-60.6"	**15,24-2015,24 mm** / 0,6-80.6"
	Combination error		**± 0,11 mm**/ ± 0.0045"	**± 0,11 mm**/ ± 0.0045"	**± 0,12 mm**/ ± 0.0050"	**± 0,16 mm**/ ± 0.0066"	**± 0,19 mm**/ ± 0.0075"

Accuracy with different Interchangeable Jaws

Functions	Series 552
ORIGIN (ABS-Zero)	●
OFFSET	●
DATA/HOLD	●
Auto Power OFF after 20 min. non use	●
Low voltage alarm	●
Data output	●
PRESET	●

Specifications

Accuracy	Refer to the list of specifications (excluding quantizing error)
Digital step	0,01 mm
Max. response speed	Unlimited
Battery life	approx. 5000 hours
Display	LCD, Character Height 10 mm
Delivered	In a case, including 1 battery, scriber clamps (2pcs.)

Standard accessories

No.	Description
05GZA033	Scriber Clamp, 9x9mm

Optional accessories

No.	Description
05CZA624	Digimatic Cable with Data Button IP Type, 1m, Caliper Type
05CZA625	Digimatic Cable with Data Button IP Type, 2m, Caliper Type
02AZD790A	U-WAVE T Connection Cable A, with Data Button IP Caliper Type
06ADV380A	USB Input Tool Direct (Digimatic USB), with Data Button IP Caliper Type

Consumable spares

No.	Description
938882	Battery SR44 1.5V

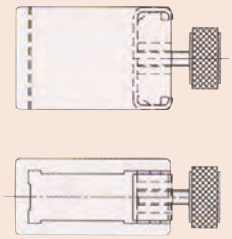

05GZA033

All products to be sold to commercial customers. Product illustrations are without obligation. Product descriptions, in particular any and all technical specifications, are only binding when explicitly agreed upon. For suggested retail prices, please refer to the separate price list.

ABSOLUTE Digimatic Carbon Fibre Caliper IP66 for Interchangeable Jaws/ Scriber

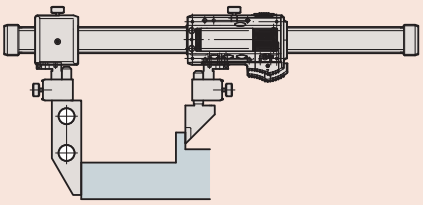

Surface plate type + Standard type

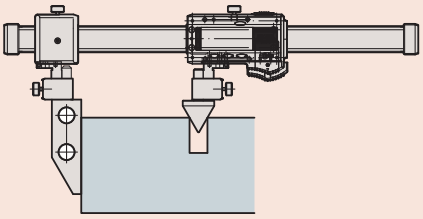

Surface plate type + Centrerline type

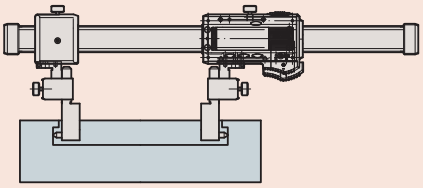

Inside point type

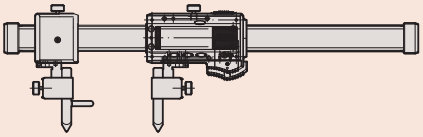

Scriber type

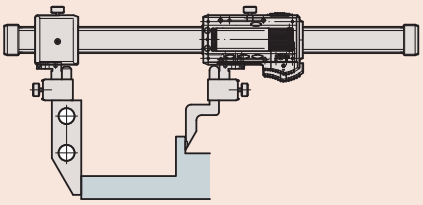

Surface plate type + Scriber for height gages

Series 552

Interchangeable jaws (optional)

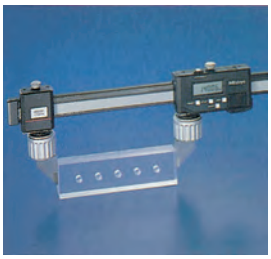

Standard type

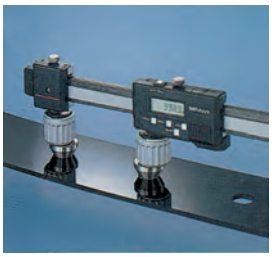

Centreline type

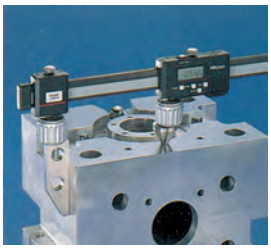

Surface plate type

Inside point type

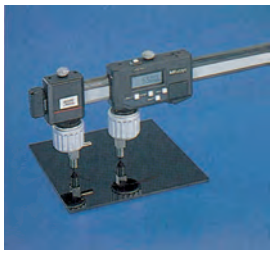

Scriber type

Metric

No.	Type	Mass [g]
07CZA056	Standard (pair)	90,6
07CZA057	Centreline (pair)	119,6
07CZA044	Surface plate (1 piece)	191,3
07CZA058	Inside point (pair)	98,8
07CZA055	Scriber (pair)	63,2
07GZA000.	Scriber for height gauges	120

Also available! Inch Models

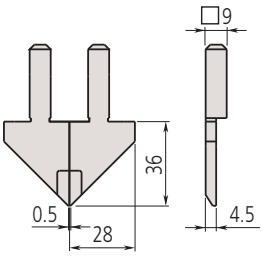

Standard type

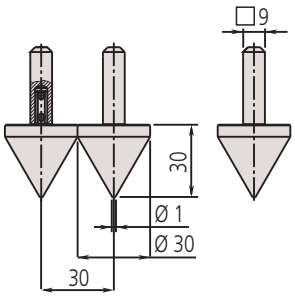

Centreline type

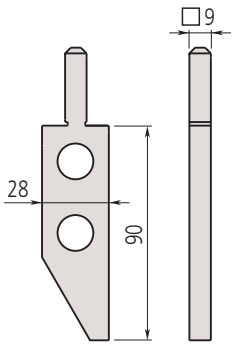

Surface plate type

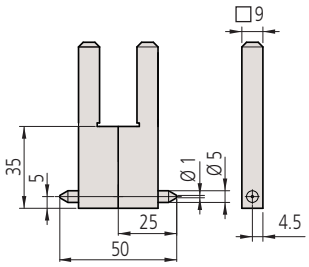

Inside point type

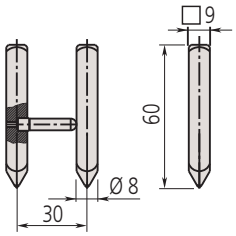

Scriber type

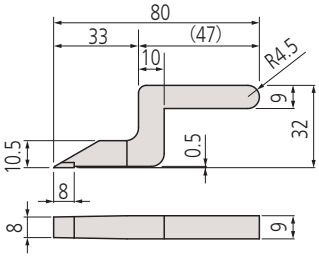

Scriber for height gages

All products to be sold to commercial customers. Product illustrations are without obligation. Product descriptions, in particular any and all technical specifications, are only binding when explicitly agreed upon. For suggested retail prices, please refer to the separate price list.

Mitutoyo

Vernier Caliper

Series 530

These are a standard type of vernier caliper that offer you the following benefits:
- Main scale and vernier scale satin chrome finish gives you high readability.
- Raised sliding surfaces.

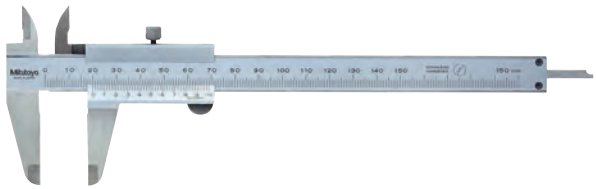

530-122

Metric Graduation 0,02 mm

No.	Range [mm]	Depth bar	Accuracy [mm]	L [mm]	a [mm]	b [mm]	c [mm]	d [mm]	Mass [g]
530-122	0-150	flat	±0,03	229	40	21	17	16	143
530-123	0-200	flat	±0,03	288	50	24,5	20,5	16	180
530-124	0-300	flat	±0,04	404	64	27,5	22	20	355

Metric Graduation 0,05 mm

No.	Range [mm]	Depth bar	Accuracy [mm]	L [mm]	a [mm]	b [mm]	c [mm]	d [mm]	Mass [g]
530-100	0-100	Ø 1,9 mm	±0,05	182	40	21,5	17	16	128
530-102	0-150	Ø 1,9 mm	±0,05	229	40	21	17	16	144
530-101	0-150	flat	±0,05	229	40	21	17	16	143
530-108	0-200	flat	±0,05	288	50	24,5	20,5	16	180
530-109	0-300	flat	±0,08	404	64	27,5	22	20	355
530-501	0-600	without	±0,1	780	90	47	38	25	1300
530-502	0-1000	without	±0,15	1240	130	60	50	32	3300

Metric/Inch Graduation **0,02 mm**-1/1000"

No.	Range [inch]	Range [mm]	Accuracy	Depth bar	L [mm]	a [mm]	b [mm]	c [mm]	d [mm]	Mass [g]
530-312	0-6	0-150	**±0,03 mm/** 0,0015"	flat	229	40	21	17	16	143
530-118	0-8	0-200	**±0,03 mm/** 0,0015"	flat	288	50	24,5	20,5	16	180
530-119	0-12	0-300	**±0,04 mm/** 0,002"	flat	404	64	27,5	22	20	355

Metric/Inch Graduation **0,05 mm**-1/128"

No.	Range [inch]	Range [mm]	Accuracy	Depth bar	L [mm]	a [mm]	b [mm]	c [mm]	d [mm]	Mass [g]
530-104	0-6	0-150	**±0,05 mm/** 0,002"	flat	229	40	21	17	16	143
530-316	0-6	0-150	**±0,05 mm/** 0,002"	flat	229	40	21	17	16	145
530-114	0-8	0-200	**±0,05 mm/** 0,002"	flat	288	50	24,5	20,5	16	180
530-115	0-12	0-300	**±0,08 mm/** 0,003"	flat	404	64	27,5	22	20	355

Also available! Inch Models

Specifications

Accuracy	Refer to the list of specifications
Delivered	In a box

Optional accessories

No.	Description
050083-10	Depth Base Attachment for Caliper, 75mm width, for 100, 150, 200mm range
050084-10	Depth Base Attachment for Caliper, 100 mm width, for 100mm, 100, 150, 200mm range
050085-10	Depth Base Attachment for Caliper, 125 mm width, for 300mm range

530-316
Clamping screw below the slider

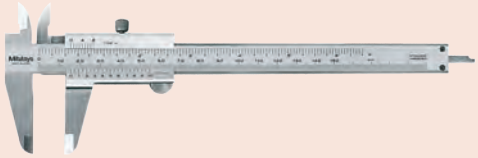

530-104
with metric/inch graduation

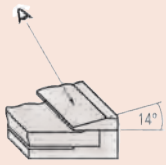

Easy reading due to vernier scales inclined by 14 degrees

Metr.ISO-Gew			
Nenn est. ext. extr. ϕ mm	Stg. Passo Pas Paso mm	Kern fond int. nucleo ϕ mm	Bohr trap meche broca ϕ mm
3	0.5	2.46	2.5
4	0.7	3.24	3.3
5	0.8	4.13	4.2
6	1	4.92	5
8	1.25	6.65	6.8
10	1.5	8.38	8.5
12	1.75	10.11	10.2
16	2	13.84	14
20	2.5	17.29	17.5
Whitworth			
ϕ in.	Gg/in.	ϕ mm	ϕ mm
1/4	20	4.72	5.0
5/16	18	6.13	6.4
3/8	16	7.49	7.7
1/2	12	9.99	10.25
5/8	11	12.92	13.25
3/4	10	15.8	16.25
7/8	9	18.61	19
1	8	21.34	21.75
101995			

530-316 only

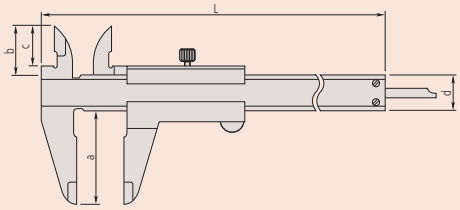

All products to be sold to commercial customers. Product illustrations are without obligation. Product descriptions, in particular any and all technical specifications, are only binding when explicitly agreed upon. For suggested retail prices, please refer to the separate price list.

Vernier Caliper with Carbide Tipped Jaws

Series 530

This vernier caliper has carbide-tipped jaws and offers you the following benefits:
- Main scale and vernier scale satin chrome finish gives you high readability.
- Raised sliding surfaces.

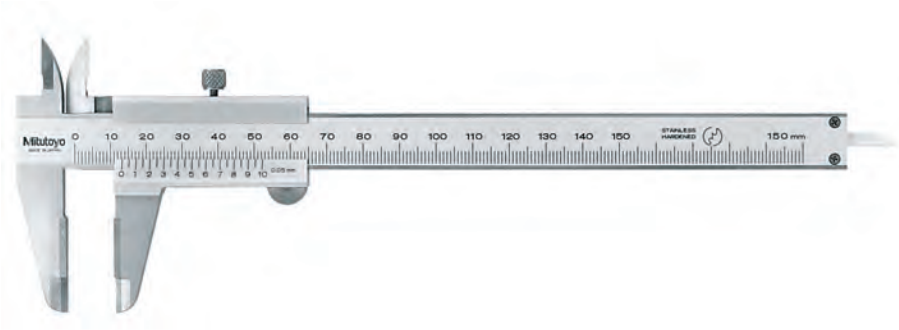

530-320

Specifications

Accuracy	Refer to the list of specifications
Graduation	0,05 mm
Delivered	In a box

Optional accessories

No.	Description
050083-10	Depth Base Attachment for Caliper, 75mm width, for 100, 150, 200mm range
050084-10	Depth Base Attachment for Caliper, 100 mm width, for 100mm, 100, 150, 200mm range
050085-10	Depth Base Attachment for Caliper, 125 mm width, for 300mm range

Carbide-tipped measuring surfaces

Metric — Carbide-tipped jaws for outside/inside measurement

No.	Range [mm]	Accuracy	Depth bar	L [mm]	a [mm]	b [mm]	c [mm]	d [mm]	Mass [g]
530-335	0-150	±0,05 mm	flat	229	40	21	17	16	145

Metric — Carbide-tipped jaws for outside measurement

No.	Range [mm]	Accuracy	Depth bar	L [mm]	a [mm]	b [mm]	c [mm]	d [mm]	Mass [g]
530-320	0-150	±0,05 mm	flat	229	40	21	17	16	145
530-321	0-200	±0,05 mm	flat	288	50	24,5	20,5	16	181
530-322	0-300	±0,08 mm	flat	404	64	27,5	22	20	355

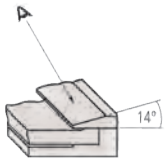

Easy reading due to vernier scales inclined by 14 degrees

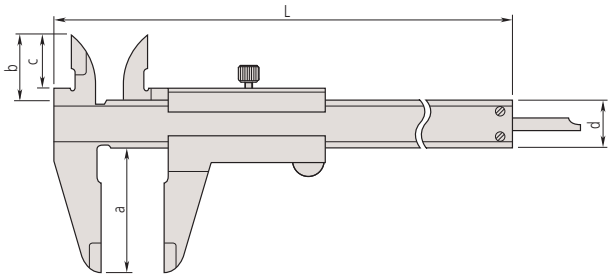

All products to be sold to commercial customers. Product illustrations are without obligation. Product descriptions, in particular any and all technical specifications, are only binding when explicitly agreed upon. For suggested retail prices, please refer to the separate price list.

Vernier Caliper with Thumb Clamp

Series 531

This vernier caliper with thumb clamp only moves when you depress the spring-loaded thumb grip.

531-122

Specifications

Accuracy	Refer to the list of specifications
Delivered	In a box

Optional accessories

No.	Description
050083-10	Depth Base Attachment for Caliper, 75mm width, for 100, 150, 200mm range
050084-10	Depth Base Attachment for Caliper, 100 mm width, for 100mm, 100, 150, 200mm range
050085-10	Depth Base Attachment for Caliper, 125 mm width, for 300mm range

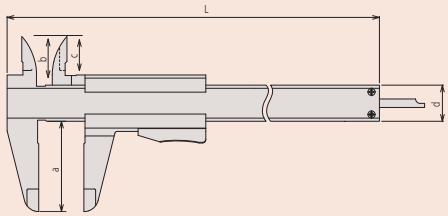

Metric

No.	Range [mm]	Graduation	Accuracy	Depth bar	L [mm]	a [mm]	b [mm]	c [mm]	d [mm]	Mass [g]
531-101	0-150	0,05 mm	±0,05 mm	flat	229	40	21,5	17	16	142
531-102	0-200	0,05 mm	±0,05 mm	flat	288	50	25	20,5	16	175
531-103	0-300	0,05 mm	±0,08 mm	flat	403	64	27,5	22	20	360

Metric/Inch

No.	Range [mm]	Range [inch]	Graduation	Accuracy	Depth bar	L [mm]	a [mm]	b [mm]	c [mm]	d [mm]	Mass [g]
531-122	0-150	0-6	0,05 mm-1/128"	±0,05 mm/0,002"	flat	229	40	21,5	17	16	142
531-108	0-200	0-8	0,05 mm-1/128"	±0,05 mm/0,002"	flat	288	50	25	20,5	16	175
531-109	0-300	0-12	0,05 mm-1/128"	±0,08 mm/0,003"	flat	403	64	27,5	22	20	360

Vernier Caliper with Fine Adjustment

Series 532

This is a vernier Caliper with fine-adjustment to help you with slider positioning.

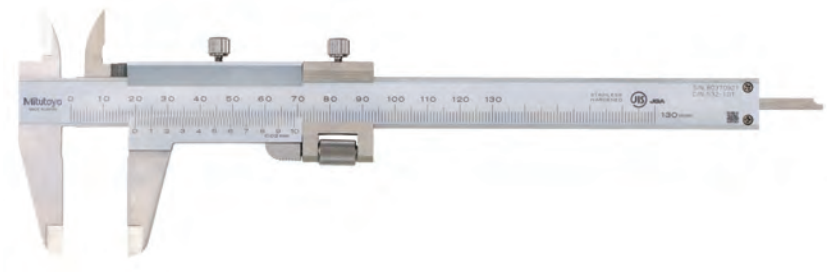

532-101

Specifications

Accuracy	Refer to the list of specifications
Graduation	0,02 mm
Delivered	In a box

Optional accessories

No.	Description
050083-10	Depth Base Attachment for Caliper, 75mm width, for 100, 150, 200mm range
050084-10	Depth Base Attachment for Caliper, 100 mm width, for 100mm, 100, 150, 200mm range
050085-10	Depth Base Attachment for Caliper, 125 mm width, for 300mm range

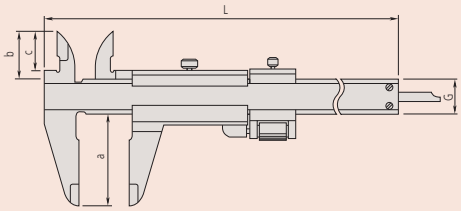

Metric

No.	Range [mm]	Accuracy	Depth bar	L [mm]	a [mm]	b [mm]	c [mm]	d [mm]	Mass [g]
532-101	0-130	±0,03 mm	flat	229	40	21,5	17	16	165
532-102	0-180	±0,03 mm	flat	288	50	25	20,5	16	202
532-103	0-280	±0,04 mm	flat	403	64	27,5	22	20	395

Also available! Inch/Metric Models

All products to be sold to commercial customers. Product illustrations are without obligation. Product descriptions, in particular any and all technical specifications, are only binding when explicitly agreed upon. For suggested retail prices, please refer to the separate price list.

Dial Caliper

Series 505

These calipers allow you to take reliable measurements and offer you the following benefits:
– Euipped with characters in a new font for easier read-out

Specifications

Accuracy	Refer to the list of specifications
Depth bar	flat
Delivered	In a case

Optional accessories

No.	Description
050083-10	Depth Base Attachment for Caliper, 75mm width, for 100, 150, 200mm range
050084-10	Depth Base Attachment for Caliper, 100 mm width, for 100mm, 100, 150, 200mm range
050085-10	Depth Base Attachment for Caliper, 125 mm width, for 300mm range

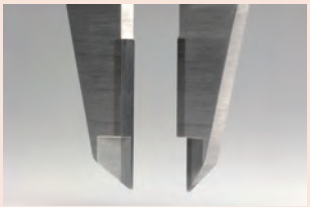

Carbide tipped jaws outside
505-734

Carbide tipped jaws inside and outside
505-735

505-730

505-732

No.	Range [mm]	Graduation	Remarks	Accuracy	L [mm]	a [mm]	b [mm]	c [mm]	d [mm]	Mass [g]
505-730	0-150	0,02 mm. 2 mm/rev		±0,03 mm	231	40	21	16,5	16	175
505-732	0-150	0,01 mm. 1 mm/rev		±0,02 mm	231	40	21	16,5	16	176
505-734	0-150	0,02 mm. 2 mm/rev	carbide tipped jaws for outside	±0,03 mm	231	40	21	16,5	16	175
505-735	0-150	0,02 mm. 2mm/rev	carbide tipped jaws for outside and inside	±0,03 mm	231	40	21	16,5	16	175
505-731	0-200	0,02 mm. 2 mm/rev		±0,03 mm	288	50	24,5	20	16	185
505-733	0-200	0,01 mm. 1 mm/rev		±0,03 mm	288	50	24,5	20	16	186
505-745	0-300	0,02 mm. 2 mm/rev		±0,04 mm	403	64	27,5	22	20	370

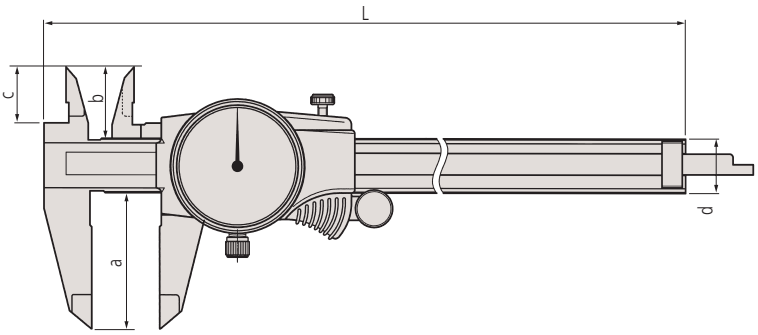

All products to be sold to commercial customers. Product illustrations are without obligation. Product descriptions, in particular any and all technical specifications, are only binding when explicitly agreed upon. For suggested retail prices, please refer to the separate price list.

Vernier Caliper with Nib Style and Standard Jaws

Series 533

These vernier calipers with nib style and standard jaws let you take easy, metric measurements
They offer you the following benefits:
- You can read inside and outside measurements directly from the upper and lower vernier scales.
- Main scale and vernier scale satin chrome finish gives you high readability.

533-404
Without fine adjustment

Specifications

Accuracy	Refer to the list of specifications
Delivered	In a box

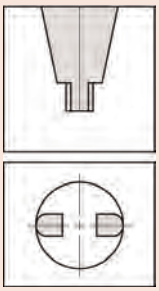

Round surface of jaws for measuring inside dimensions

Metric

With fine adjustment

No.	Range [mm]	Graduation	Accuracy	Inside measuring from	L [mm]	a [mm]	b [mm]	c [mm]	d [mm]	Mass [g]
533-504	0-500	0,02 mm	±0,05 mm	20,1 mm	680	150	15	56	25	1250
533-505	0-750	0,02 mm	±0,07 mm	20,1 mm	963	150	15	56	25	1550
533-506	0-1000	0,02 mm	±0,08 mm	20,1 mm	1230	150	20	56	32	3450

Metric

Without fine adjustment

No.	Range [mm]	Graduation	Accuracy	Inside measuring from	L [mm]	a [mm]	b [mm]	c [mm]	d [mm]	Mass [g]
533-404	0-500	0,05 mm	±0,1 mm	20,1 mm	680	150	15	56	25	1200
533-405	0-750	0,05 mm	±0,12 mm	20,1 mm	963	150	15	56	25	1500
533-406	0-1000	0,05 mm	±0,15 mm	20,1 mm	1230	150	20	56	32	3300

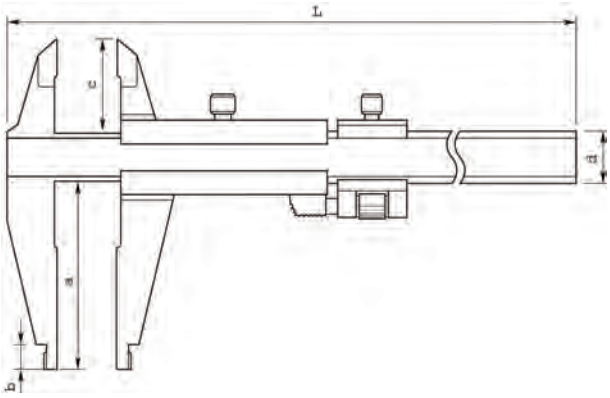

All products to be sold to commercial customers. Product illustrations are without obligation. Product descriptions, in particular any and all technical specifications, are only binding when explicitly agreed upon. For suggested retail prices, please refer to the separate price list.

Vernier Caliper with Nib Style Jaws

Series 160

These vernier calipers with nib style jaws come with or without fine adjustment.
They offer you the following benefits:
- The top offset vernier scale allows you to directly read the inside dimensions without having to add the jaw blade width.
- Main scale and vernier scale satin chrome finish gives you high readability.

Specifications

Accuracy	Refer to the list of specifications
Note	Up to 300 mm: parallax-free design
Delivered	In a box

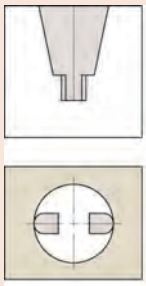

Rounded outside measuring surfaces for measuring inside dimensions

160-101

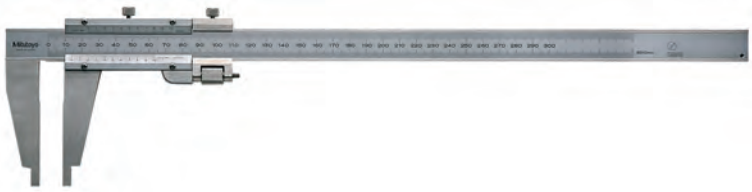

160-127

Metric — With fine adjustment

No.	Range [mm]	Graduation	Accuracy	Inside measuring from
160-127	0-300	0,02 mm	± 0,04 mm	10,1 mm
160-128	0-450	0,02 mm	±0,05 mm	20,1 mm
160-101	0-600	0,02 mm	±0,05 mm	20,1 mm
160-104	0-1000	0,02 mm	±0,07 mm	20,1 mm
160-110	0-1500	0,02 mm	±0,1 mm	20,1 mm
160-113	0-2000	0,02 mm	±0,12 mm	20,1 mm

No.	L [mm]	R [mm]	a [mm]	b [mm]	c [mm]	d [mm]	e [mm]	f [mm]	Mass [g]
160-127	445	5	95	75	12	20	10	38	450
160-128	630	10	125	100	18	25	14,8	6	1200
160-101	780	10	125	100	18	25	14,8	6	1400
160-104	1240	10	172	140	24	32	17	10	3500
160-110	1800	10	212	180	30	32	19	10	4850
160-113	2300	10	220	180	30	40	23	12	10300

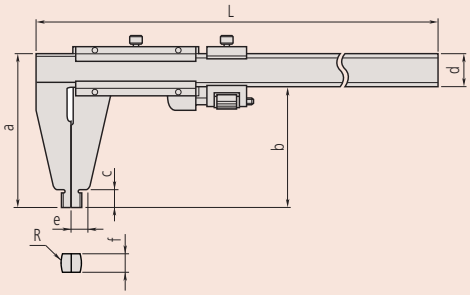

Metric — Without fine adjustment

No.	Range [mm]	Graduation	Accuracy	Inside measuring from
160-130	0-450	0,05 mm	±0,1 mm	20,1 mm
160-131	0-600	0,05 mm	±0,1 mm	20,1 mm
160-132	0-1000	0,05 mm	±0,15 mm	20,1 mm
160-133	0-1500	0,05 mm	±0,22 mm	20,1 mm
160-134	0-2000	0,05 mm	±0,28 mm	20,1 mm

No.	L [mm]	R [mm]	a [mm]	b [mm]	c [mm]	d [mm]	e [mm]	f [mm]	Mass [g]
160-130	630	10	125	100	18	25	14,8	6	1100
160-131	780	10	125	100	18	25	14,8	6	1300
160-132	1240	10	172	140	24	32	17	10	3300
160-133	1800	10	212	180	30	32	19	10	4700
160-134	2300	10	220	180	30	40	23	12	9900

All products to be sold to commercial customers. Product illustrations are without obligation. Product descriptions, in particular any and all technical specifications, are only binding when explicitly agreed upon. For suggested retail prices, please refer to the separate price list.

Vernier Caliper with Long Jaws

Series 534

These vernier calipers with long jaws come with or without fine adjustment and let you measure hard-to-reach features.
They offer you the following benefits:
- Long jaws enable you to measure hard-to-reach workpiece features.
- The top offset vernier scale allows you to directly read the inside dimensions without having to add the jaw blade width.

534-110

Metric

With fine adjustment

No.	Range [mm]	Graduation	Accuracy	Inside measuring from
534-113	0-300	0,02 mm	±0,04 mm	10,1 mm
534-114	0-500	0,02 mm	±0,06 mm	20,1 mm
534-115	0-750	0,02 mm	±0,08 mm	20,1 mm
534-116	0-1000	0,02 mm	±0,1 mm	20,1 mm

No.	L [mm]	R [mm]	a [mm]	b [mm]	c [mm]	d [mm]	e [mm]	f [mm]	Mass [g]
534-113	445	5	110	90	12	20	7	3,8	460
534-114	682	10	225	200	18,5	25	12	6	1500
534-115	995	10	232	200	18,5	32	12	8	2900
534-116	1230	10	232	200	18,5	32	12	8	3500

Metric

Without fine adjustment

No.	Range [mm]	Graduation	Accuracy	Inside measuring from
534-109	0-300	0,05 mm	±0,07 mm	10,1 mm
534-110	0-500	0,05 mm	±0,13 mm	20,1 mm

No.	L [mm]	R [mm]	a [mm]	b [mm]	c [mm]	d [mm]	e [mm]	f [mm]	Mass [g]
534-109	445	5	110	90	12	20	7	3,8	400
534-110	682	10	225	200	18,5	25	12	6	1400

Also available! Inch Models

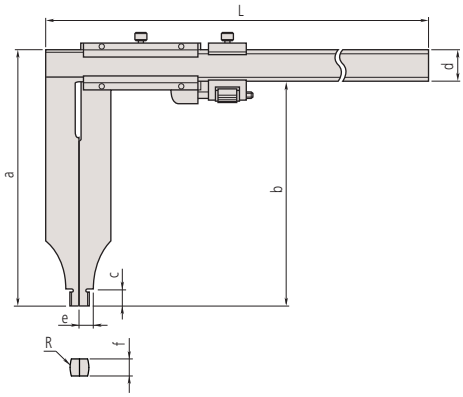

Specifications

Accuracy	Refer to the list of specifications
Delivered	In a box

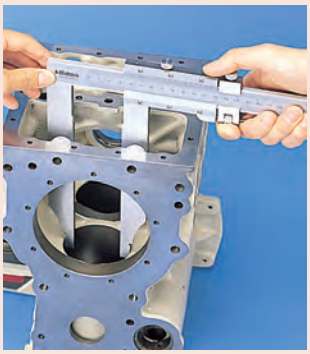

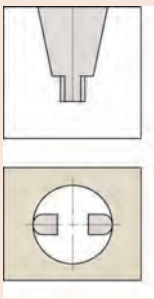

Rounded outside measuring surfaces for measuring inside dimensions

All products to be sold to commercial customers. Product illustrations are without obligation. Product descriptions, in particular any and all technical specifications, are only binding when explicitly agreed upon. For suggested retail prices, please refer to the separate price list.

ABSOLUTE Digimatic Caliper with Constant Measuring Force

Functions	Series 573
ORIGIN (ABS-Zero)	●
ZERO/ABS	●
ON/OFF	●
Low voltage alarm	●
Data output	●

Specifications

Accuracy	Refer to the list of specifications (excluding quantizing error)
Digital step	0,01 mm
Measuring force	0,5-1 N
Jaw retraction	0,3 mm
Max. response speed	Unlimited
Battery life	approx. 18000 hours
Display	LCD, Character Height 9 mm
Delivered	In a case, including 1 battery

Optional accessories

No.	Description
959149	Digimatic Cable, Straight, Data Button, 1m
959150	Digimatic Cable, Straight, Data Button, 2m
959143	Data Hold Unit
02AZD790C	U-WAVE T Connection Cable C, Straight, with Data Button
06ADV380C	USB Input Tool Direct (Digimatic USB), Straight, with Data Button

Consumable spares

No.	Description
938882	Battery SR44 1.5V

A consistently low measuring force can be guaranteed by only taking measurements when the pointer is between the two fiducial lines.

Series 573

ABSOLUTE®

These Digimatic calipers have a load cell and help you measure elastic workpieces. They offer you the following benefits:

- Due to their low and constant measuring force these calipers are ideal for measuring elastic workpieces such as plastic and rubber parts that standard calipers cannot measure accurately.
- Now equipped with the same AOS (Advanced Onsite Sensor) induction type encoder used in top-of-the-line ABS coolant-proof calipers.
- Thanks to the adoption of the electromagnetic induction type ABS encoder, this caliper can be used without concern for contamination on the scale face during measurement. Detection signal is not affected by dirt (water, oil, etc.) on surface of a scale.
- Character height: 9mm (alleviation of fatigue with the high-contrast LCD)
- The ABS (ABSOLUTE) scale requires no origin setting after power-on and also has no limit to response speed.
- Extraordinary battery life

573-191-30

Metric

No.	Range [mm]	Accuracy	Mass [g]
573-191-30	0-180	±0,05 mm	253

Also available! Inch/Metric Models

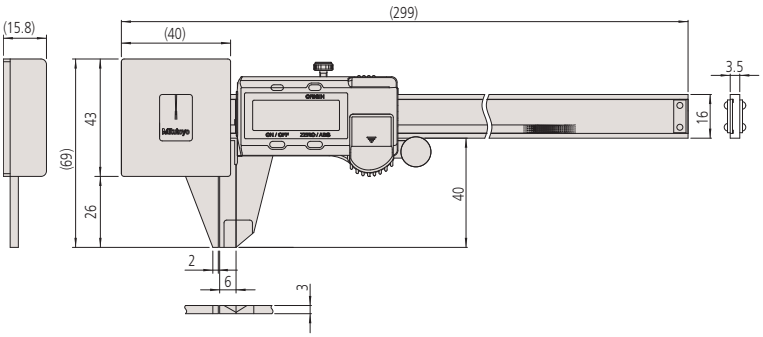

All products to be sold to commercial customers. Product illustrations are without obligation. Product descriptions, in particular any and all technical specifications, are only binding when explicitly agreed upon. For suggested retail prices, please refer to the separate price list.

Mitutoyo

ABSOLUTE Digimatic Caliper for Tolerance Measurement

Series 573

ABSOLUTE®

The ABSOLUTE Digimatic snap caliper features a spring-loaded mechanism to allow quick and efficient GO/±NO-GO inspection for mass produced parts.

- Now equipped with the same AOS (Advanced Onsite Sensor) induction type encoder used in top-of-the-line ABS coolant-proof calipers.
- Thanks to the adoption of the electromagnetic induction type ABS encoder, this caliper can be used without concern for contamination on the scale face during measurement. Detection signal is not affected by dirt (water, oil, etc.) on surface of a scale.
- The slider provides smooth, stable and comfortable operation.
- Character height: 9mm (alleviation of fatigue with the high-contrast LCD)
- The ABS (ABSOLUTE) scale requires no origin setting after power-on and also has no limit to response speed.
- Extraordinary battery life

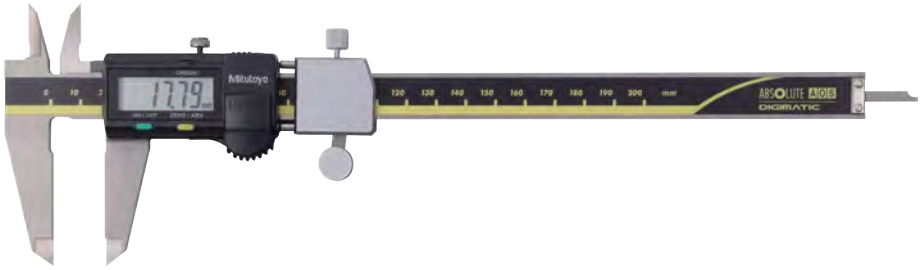

573-182-30

Metric

No.	Range [mm]	L [mm]	a [mm]	b [mm]	c [mm]	d [mm]	Mass [g]
573-181-30	0-100	233	40	21	16,5	16	213
573-182-30	0-150	290	50	24,5	20	16	233

Also available! Inch/Metric Models

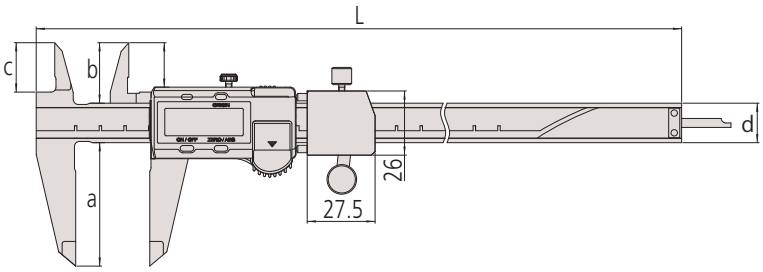

Functions	Series 573
ORIGIN (ABS-Zero)	●
ZERO/ABS	●
ON/OFF	●
Low voltage alarm	●
Data output	●

Specifications

Accuracy	±0,02 mm (excluding quantizing error)
Digital step	0,01 mm
Measuring force	7-14 N
Jaw retraction	2 mm
Max. response speed	Unlimited
Battery life	approx. 18000 hours
Display	LCD, Character height 9 mm
Delivered	In a case, including 1 battery

Optional accessories

No.	Description
959149	Digimatic Cable, Straight, Data Button, 1m
959150	Digimatic Cable, Straight, Data Button, 2m
959143	Data Hold Unit
02AZD790C	U-WAVE T Connection Cable C, Straight, with Data Button
06ADV380C	USB Input Tool Direct (Digimatic USB), Straight, with Data Button

Consumable spares

No.	Description
938882	Battery SR44 1.5V

All products to be sold to commercial customers. Product illustrations are without obligation. Product descriptions, in particular any and all technical specifications, are only binding when explicitly agreed upon. For suggested retail prices, please refer to the separate price list.

Scribing Caliper with Carbide Tipped Jaws

Functions	Series 573
ORIGIN (ABS-Zero)	●
Auto Power OFF after 20 min. non use	●
Low voltage alarm	●
Data output	●

Specifications

Accuracy	Refer to the list of specifications (excluding quantizing error)
Digital step	0,01 mm
Max. response speed	Unlimited
Battery life	approx. 5 years (150 mm, 200 mm) 5000 hours (300 mm)
Display	LCD, Character Height 9 mm (150, 200 mm) 10,2 mm (300 mm)
Delivered	In a case, including 1 battery

Optional accessories

No.	Description
05CZA624	Digimatic Cable with Data Button IP Type, 1m, Caliper Type
05CZA625	Digimatic Cable with Data Button IP Type, 2m, Caliper Type
02AZD790A	U-WAVE T Connection Cable A, with Data Button IP Caliper Type
06ADV380A	USB Input Tool Direct (Digimatic USB), with Data Button IP Caliper Type

Consumable spares

No.	Description
938882	Battery SR44 1.5V

Sample application

Specifications

Accuracy	Refer to the list of specifications
Graduation	0,05mm
Delivered	In a case

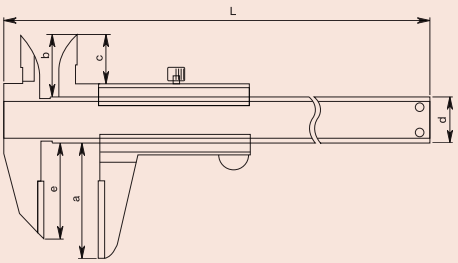

Series 573

These calipers are designed for scribing tasks.
They offer you the following benefits:
- Carbide-tipped jaws facilitate fine scribing on workpiece.
- With depth bar.

573-677-20

Metric

No.	Range [mm]	Accuracy	L [mm]	a [mm]	b [mm]	c [mm]	d [mm]	e [mm]	Mass [g]
573-676-20	0-150	±0,02 mm	229	46	21,5	17	16	33	166
573-677-20	0-200	±0,02 mm	288	50	25	20,5	16	43	196
573-679	0-300	±0,03 mm	403	64	27,5	22	20	54	345

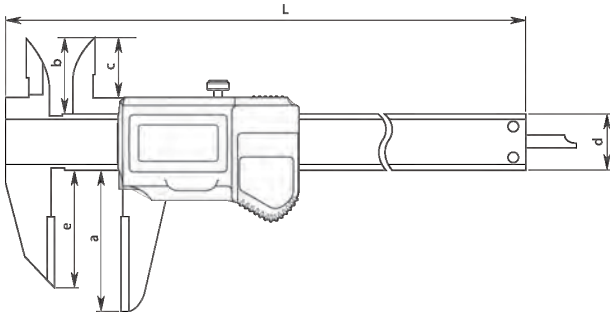

Series 536

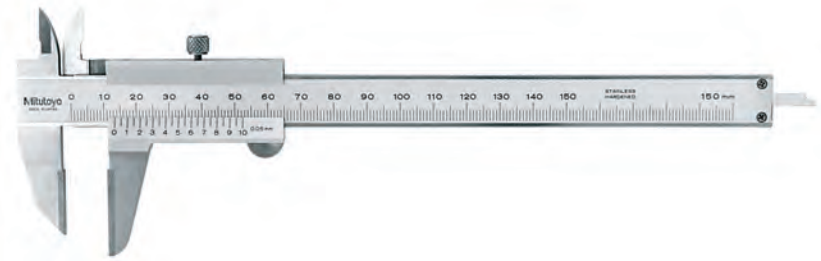

536-221

Metric

No.	Range [mm]	Accuracy	L [mm]	a [mm]	b [mm]	c [mm]	d [mm]	e [mm]	Mass [g]
536-221	0-150	±0,05 mm	229	40	21,5	17	16	33	150
536-222	0-200	±0,05 mm	288	50	25	20,5	16	43	180
536-223	0-300	±0,08 mm	403	64	27,5	22	20	54	400

All products to be sold to commercial customers. Product illustrations are without obligation. Product descriptions, in particular any and all technical specifications, are only binding when explicitly agreed upon. For suggested retail prices, please refer to the separate price list.

Offset Caliper

Series 573

These offset calipers enable you to measure stepped workpieces. They offer you the following benefits:

– You can adjust the beam-mounted jaw to facilitate measurement of stepped sections and hard-to-reach workpiece features.

Safety Dust- and Water-Protected
www.tuv.com ID 2011207400

ABSOLUTE®

IP67

573-602-20

Metric — Without thumb roller

No.	Range [mm]	Accuracy	a [mm]	b [mm]	c [mm]	d [mm]	Mass [g]
573-611-20	0-150	±0,02 mm	95	10	40	30	168
573-612-20	0-200	±0,02 mm	95	10	50	38,5	198
573-614	0-300	±0,03 mm	135	15	64	51	350

Metric — With thumb roller

No.	Range [mm]	Accuracy	a [mm]	b [mm]	c [mm]	d [mm]	Mass [g]
573-601-20	0-150	±0,02 mm	95	10	40	30	168
573-602-20	0-200	±0,02 mm	95	10	50	38,5	198
573-604	0-300	±0,03 mm	135	15	64	51	350

Functions	Series 573
ORIGIN (ABS-Zero)	●
Auto Power OFF after 20 min. non use	●
Low voltage alarm	●
Data output	●

Specifications

Accuracy	Refer to the list of specfications (excluding quantizing error)
Digital step	0,01 mm
Max. response speed	Unlimited
Battery life	approx. 5 years (150 mm, 200 mm) 5000 hours (300 mm)
Display	LCD, Character Height 9 mm (150 mm, 200 mm) 10,2 mm (300 mm)
Delivered	In a case, including 1 battery

Optional accessories

No.	Description
05CZA624	Digimatic Cable with Data Button IP Type, 1m, Caliper Type
05CZA625	Digimatic Cable with Data Button IP Type, 2m, Caliper Type
02AZD790A	U-WAVE T Connection Cable A, with Data Button IP Caliper Type
06ADV380A	USB Input Tool Direct (Digimatic USB), with Data Button IP Caliper Type

Consumable spares

No.	Description
938882	Battery SR44 1.5V

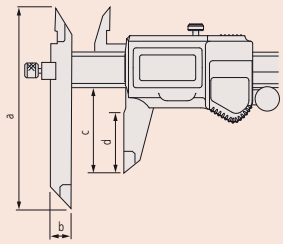

Series 536

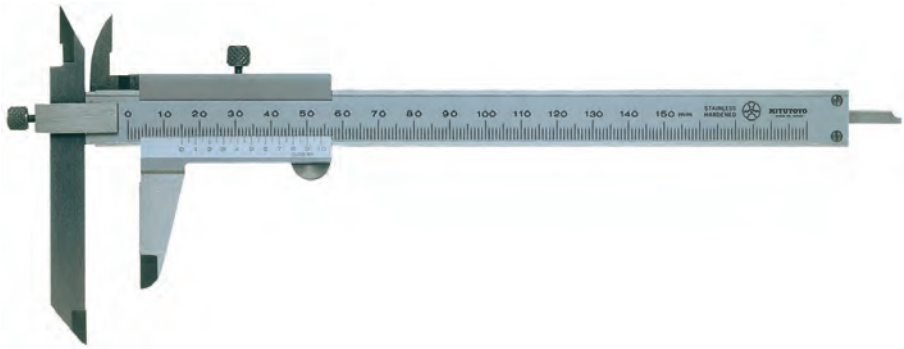

536-101

Metric

No.	Range [mm]	Accuracy	L [mm]	a [mm]	b [mm]	c [mm]	d [mm]	e [mm]	Mass [g]
536-101	0-150	±0,05 mm	229	95	40	10	16	7,5	150
536-102	0-200	±0,05 mm	286	95	50	10	16	8,5	200
536-103	0-300	±0,08 mm	403	135	64	15	20	12	400

Specifications

Accuracy	Refer to the list of specifications
Graduation	0,05 mm
Delivered	In a case

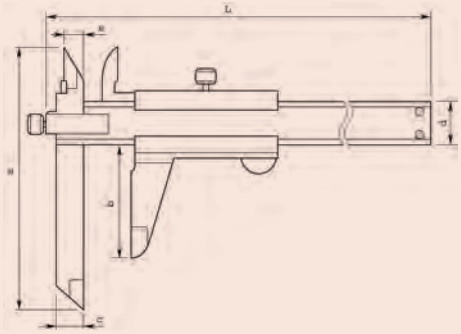

All products to be sold to commercial customers. Product illustrations are without obligation. Product descriptions, in particular any and all technical specifications, are only binding when explicitly agreed upon. For suggested retail prices, please refer to the separate price list.

Offset Centerline Caliper

Functions	Series 573
ORIGIN (ABS-Zero)	●
OFFSET*	●
Auto Power OFF after 20 min. non use	●
Low voltage alarm	●
Data output	●
PRESET	●

Specifications

Accuracy	Refer to the list of specifications (excluding quantizing error)
Digital step	0,01 mm
Max. response speed	Unlimited
Battery life	approx. 5 years (150 mm , 200 mm) 5000 hours (300 mm)
Display	LCD, Character Height 9 mm (150 mm, 200 mm) 10,2 (300 mm)
Delivered	In a case, including 1 battery

Optional accessories

No.	Description
05CZA624	Digimatic Cable with Data Button IP Type, 1m, Caliper Type
05CZA625	Digimatic Cable with Data Button IP Type, 2m, Caliper Type
02AZD790A	U-WAVE T Connection Cable A, with Data Button IP Caliper Type
06ADV380A	USB Input Tool Direct (Digimatic USB), with Data Button IP Caliper Type

Consumable spares

No.	Description
938882	Battery SR44 1.5V

* 10 mm

Specifications

Accuracy	Refer to the list of specifications
Graduation	0,02mm
Delivered	In a case

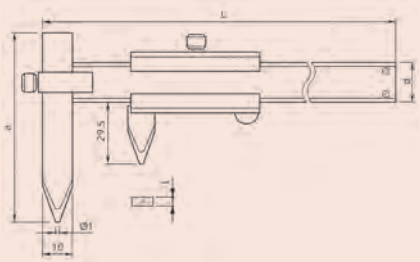

Series 573

These offset centreline calipers enable you to measure centre to centre distance.
They offer you the following benefits:
- Specially designed for hole centre-to-centre measurements in the same plane, or between offset planes.
- You can also measure from an edge to a hole centre.

573-606-20

Metric — Without thumb roller

No.	Range [mm]	Accuracy	a [mm]	t [mm]	Mass [g]
573-615-20	10,1-160	±0,03 mm	75	3	157
573-616-20	10,1-210	±0,03 mm	75	3	177
573-618	10,1-310	±0,04 mm	100	3,8	320

Metric — With thumb roller

No.	Range [mm]	Accuracy	a [mm]	t [mm]	Mass [g]
573-605-20	10,1-160	±0,03 mm	75	3	157
573-606-20	10,1-210	±0,03 mm	75	3	177
573-608	10,1-310	±0,04 mm	100	3,8	320

mm

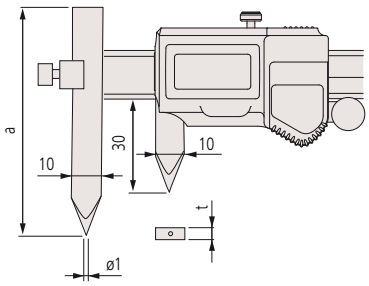

Series 536

536-106

Metric

No.	Range [mm]	Accuracy	L [mm]	a [mm]	d [mm]	t [mm]	Mass [g]
536-105	10,1-150	±0,05 mm	229	75	16	3	140
536-106	10,1-200	±0,05 mm	282	75	16	3	160
536-107	10,1-300	±0,08 mm	383	100	20	3,8	320

All products to be sold to commercial customers. Product illustrations are without obligation. Product descriptions, in particular any and all technical specifications, are only binding when explicitly agreed upon. For suggested retail prices, please refer to the separate price list.

Swivel Caliper

Series 536

These vernier calipers have a swivelling jaw. They offer you the following benefits:
- You can rotate the moving jaw to measure sectioned shafts.
- With depth bar.

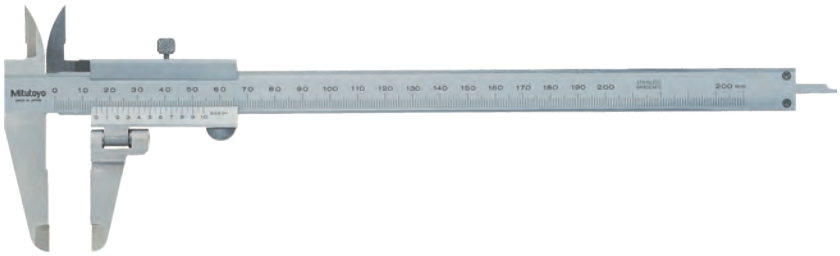

536-212

Metric

No.	Range [mm]	Remarks	Mass [g]
536-212	0-200	Swivel range ±90°	190

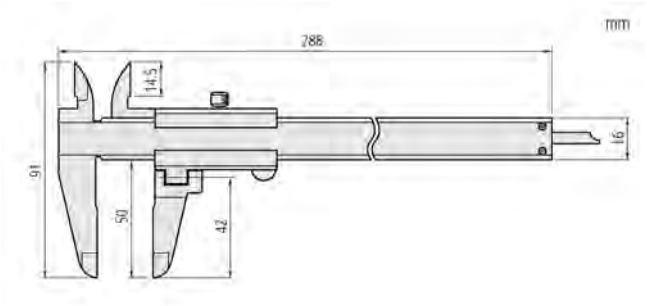

Specifications

Accuracy	±0,05 mm
Graduation	0,05mm
Delivered	In a case

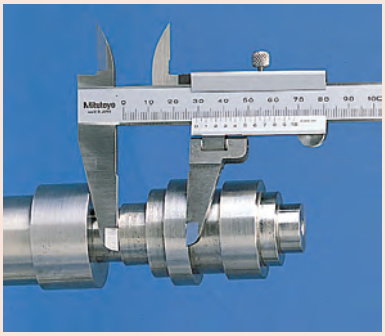

All products to be sold to commercial customers. Product illustrations are without obligation. Product descriptions, in particular any and all technical specifications, are only binding when explicitly agreed upon. For suggested retail prices, please refer to the separate price list.

ABSOLUTE Digimatic Back-Jaw Centreline Caliper

Functions	Series 573
ORIGIN (ABS-Zero)	●
ZERO/ABS	●
OFFSET*	●
ON/OFF	●
Low voltage alarm	●
Data output	●
PRESET	●

Specifications

Accuracy	Refer to the list of specifications (excluding quantizing error)
Digital step	0,01 mm
Max. response speed	Unlimited
Battery life	approx. 5000 hours
Display	LCD, Character Height 7 mm
Delivered	In a case, including 1 battery

Optional accessories

No.	Description
959149	Digimatic Cable, Straight, Data Button, 1m
959150	Digimatic Cable, Straight, Data Button, 2m
959143	Data Hold Unit
02AZD790C	U-WAVE T Connection Cable C, Straight, with Data Button
06ADV380C	USB Input Tool Direct (Digimatic USB), Straight, with Data Button

Consumable spares

No.	Description
938882	Battery SR44 1.5V

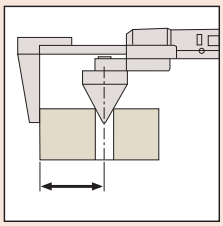

Edge-to-center type

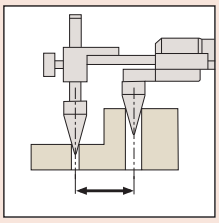

Centre-to-centre type

* 10 mm

Series 573

ABSOLUTE®

These Digimatic back-jaw centreline calipers offer you the following benefits:
- Specially designed to allow you to measure hole centre-to-centre or edge-to-centre distances.
- You can read measurements more easily from above, thanks to the jaws being on the back of the slide.
- Direct reading of pitch measurements is also available due to the offset value setting function.

573-116-10
Centre-to-centre type

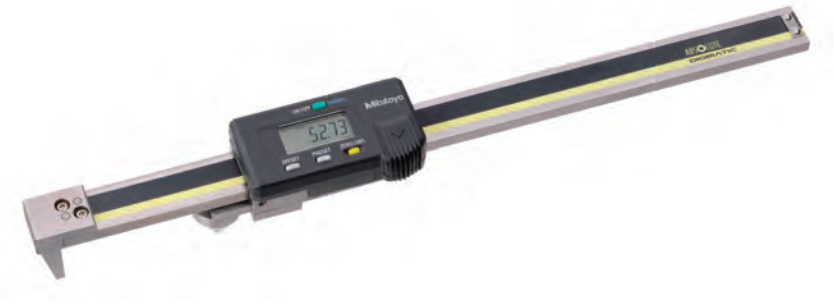

573-118-10
Edge-to-centre type

Metric — Centre-to-centre type

No.	Range [mm]	Accuracy	Mass [g]
573-116-10	10,1-200	±0,1 mm	485
573-117-10	10,1-300	±0,15 mm	580

Metric — Edge-to-centre type

No.	Range [mm]	Accuracy	Mass [g]
573-118-10	10,1-200	±0,1 mm	490
573-119-10	10,1-300	±0,15 mm	585

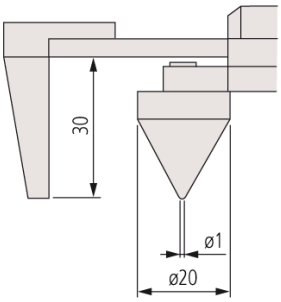

573-118-10
573-119-10

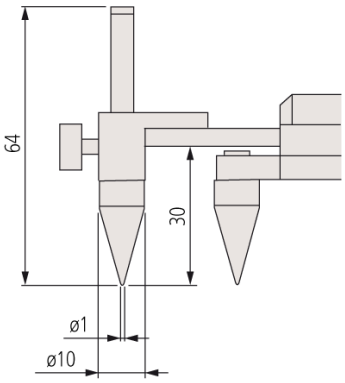

573-116-10
573-117-10

All products to be sold to commercial customers. Product illustrations are without obligation. Product descriptions, in particular any and all technical specifications, are only binding when explicitly agreed upon. For suggested retail prices, please refer to the separate price list.

Mitutoyo

Point Caliper

Series 573

These point calipers have extra fine ground measuring jaws. They offer you the following benefits:

– Narrow-tip jaws fit into very small grooves and tracks, making it much easier for you to obtain many previously difficult outside measurements.

573-625-30

Metric — Fine measuring jaws

No.	Range [mm]	Accuracy	Thumb roller	Mass [g]
573-625-20	0-150	± 0,02 mm	●	163
573-626-20	0-150	± 0,02 mm		163

Metric — Pointed measuring jaws

No.	Range [mm]	Accuracy	Thumb roller	Mass [g]
573-621-20	0-150	± 0,02 mm	●	163
573-622-20	0-150	± 0,02 mm		163

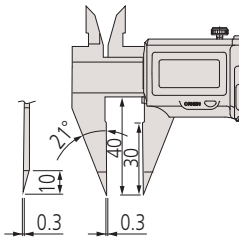

Fine measuring jaws

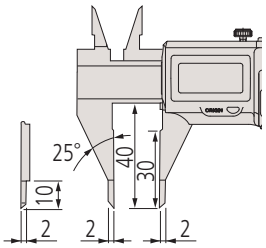

Pointed measuring jaws

Series 536

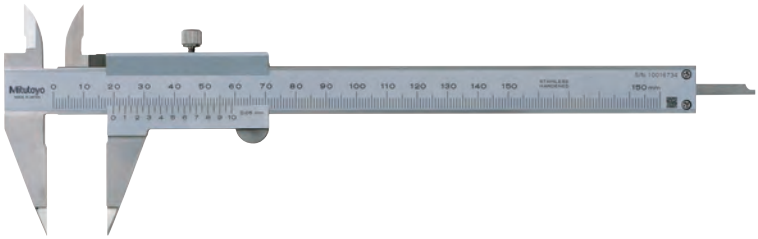

536-121

Metric

No.	Range [mm]	Mass [g]
536-121	0-150	150

Functions	Series 573
ORIGIN (ABS-Zero)	●
Auto Power OFF after 20 min. non use	●
Low voltage alarm	●
Data output	●

Specifications

Accuracy	Refer to the list of specifications (excluding quantizing error)
Digital step	0,01 mm
Max. response speed	Unlimited
Battery life	approx. 5 years
Display	LCD, Character Height 9 mm
Delivered	In a case, including 1 battery

Optional accessories

No.	Description
05CZA624	Digimatic Cable with Data Button IP Type, 1m, Caliper Type
05CZA625	Digimatic Cable with Data Button IP Type, 2m, Caliper Type
02AZD790A	U-WAVE T Connection Cable A, with Data Button IP Caliper Type
06ADV380A	USB Input Tool Direct (Digimatic USB), with Data Button IP Caliper Type

Consumable spares

No.	Description
938882	Battery SR44 1.5V

Specifications

Accuracy	±0,05 mm
Graduation	0,05 mm
Delivered	In a case

mm

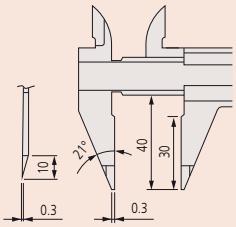

All products to be sold to commercial customers. Product illustrations are without obligation. Product descriptions, in particular any and all technical specifications, are only binding when explicitly agreed upon. For suggested retail prices, please refer to the separate price list.

Blade Caliper

Functions	Series 573
ORIGIN (ABS-Zero)	●
Auto Power OFF after 20 min. non use	●
Low voltage alarm	●
Data output	●

Specifications

Accuracy	Refer to the list of specifications (excluding quantizing error)
Digital step	0,01 mm
Max. response speed	Unlimited
Battery life	approx. 5 years
Display	LCD, Character Height 9 mm
Delivered	In a case, including 1 battery

Optional accessories

No.	Description
05CZA624	Digimatic Cable with Data Button IP Type, 1m, Caliper Type
05CZA625	Digimatic Cable with Data Button IP Type, 2m, Caliper Type
02AZD790A	U-WAVE T Connection Cable A, with Data Button IP Caliper Type
06ADV380A	USB Input Tool Direct (Digimatic USB), with Data Button IP Caliper Type

Consumable spares

No.	Description
938882	Battery SR44 1.5V

Specifications

Accuracy	Refer to the list of specifications
Graduation	0,05mm
Delivered	In a case

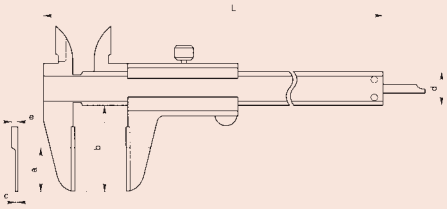

Series 573

These blade calipers have thin measuring jaws. They offer you the following benefits:

- The thin blade-type jaws fit into very small grooves making it much easier for you to obtain many previously difficult outside measurements.
- The outside measuring faces are carbide.

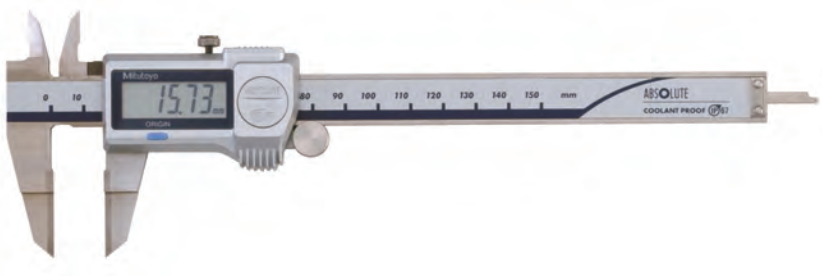

573-634-20

Metric

No.	Range [mm]	Accuracy	Thumb roller	Mass [g]
573-634-20	0-150	±0,02 mm	●	168
573-635-20	0-150	±0,02 mm		168

mm

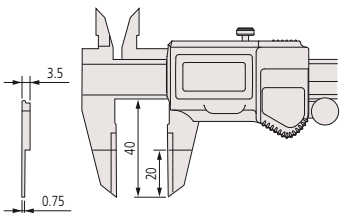

Series 536

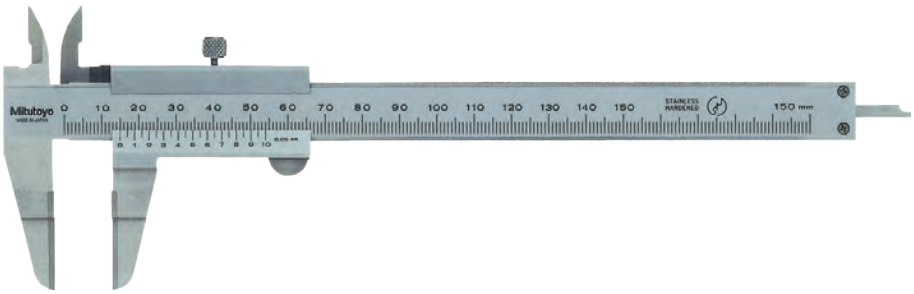

536-134

Metric

No.	Range [mm]	Accuracy	L [mm]	a [mm]	b [mm]	c [mm]	d [mm]	e [mm]	Mass [g]
536-134	0-150	±0,05 mm	229	20	40	0,75	16	3	140
536-135	0-200	±0,05 mm	286	25	50	0,75	16	3	180
536-136	0-300	±0,08 mm	403	30	64	1	16	3,8	420

All products to be sold to commercial customers. Product illustrations are without obligation. Product descriptions, in particular any and all technical specifications, are only binding when explicitly agreed upon. For suggested retail prices, please refer to the separate price list.

ABSOLUTE Digimatic Neck Caliper

Series 573

These neck calipers enable measurements in hard to reach places. They offer you the following benefits:
– You can measure wall thickness inside bores and recesses.

Safety Dust- and Water-Protected
TÜVRheinland CERTIFIED
www.tuv.com ID 2011207400

ABSOLUTE®
IP67

573-651-20

573-652-20

Metric

No.	Range [mm]	Accuracy	Thumb roller	Mass [g]
573-651-20	0-150	±0,03 mm	●	157
573-653-20	0-150	±0,03 mm		157

Metric Point jaw type

No.	Range [mm]	Accuracy	Thumb roller	Mass [g]
573-652-20	0-150	±0,03 mm	●	157
573-654-20	0-150	±0,03 mm		157

mm

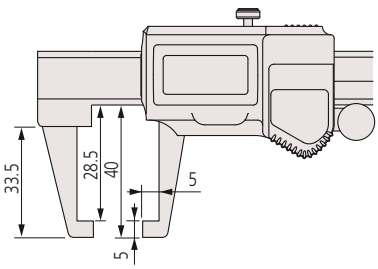

mm

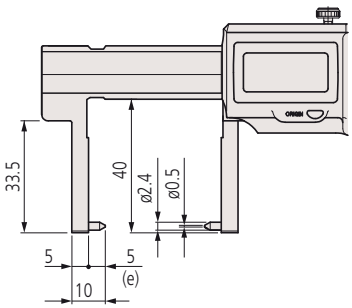

Point jaw type

Functions	Series 573
ORIGIN (ABS-Zero)	●
Auto Power OFF after 20 min. non use	●
Low voltage alarm	●
Data output	●

Specifications

Accuracy	Refer to the list of specifications (excluding quantizing error)
Digital step	0,01 mm
Max. response speed	Unlimited
Battery life	aprox. 5 years
Display	LCD, Character Height 9 mm
Delivered	In a case, including 1 battery

Optional accessories

No.	Description
05CZA624	Digimatic Cable with Data Button IP Type, 1m, Caliper Type
05CZA625	Digimatic Cable with Data Button IP Type, 2m, Caliper Type
02AZD790A	U-WAVE T Connection Cable A, with Data Button IP Caliper Type
06ADV380A	USB Input Tool Direct (Digimatic USB), with Data Button IP Caliper Type

Consumable spares

No.	Description
938882	Battery SR44 1.5V

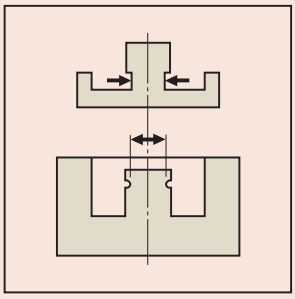

All products to be sold to commercial customers. Product illustrations are without obligation. Product descriptions, in particular any and all technical specifications, are only binding when explicitly agreed upon. For suggested retail prices, please refer to the separate price list.

Neck Caliper

Series 536

These neck calipers enable measurements in hard to reach places.
They offer you the following benefits:
– You can measure wall thickness inside bores and recesses.

Specifications

Accuracy	±0,05 mm
Graduation	0,05mm
Delivered	In a case

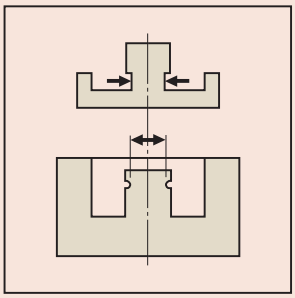

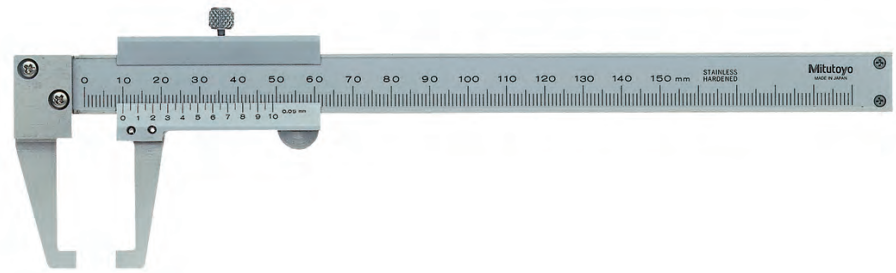

536-151

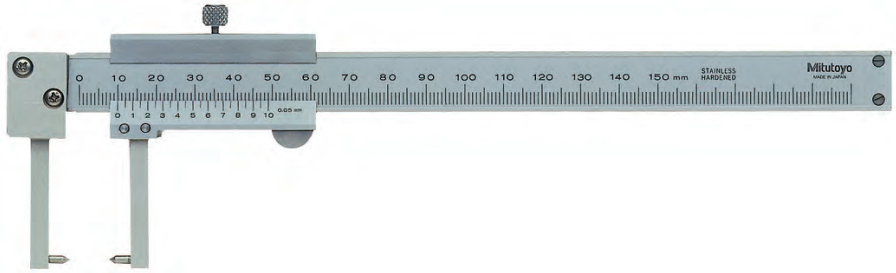

536-152
Point jaw type

Metric

No.	Range [mm]	Mass [g]
536-151	0-150	140

Metric Point jaw type

No.	Range [mm]	L [mm]	a [mm]	b [mm]	c [mm]	d [mm]	e [mm]	Mass [g]
536-152	0-150	229	38	5	5	16	2	140

mm

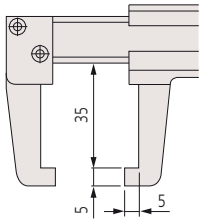

536-151

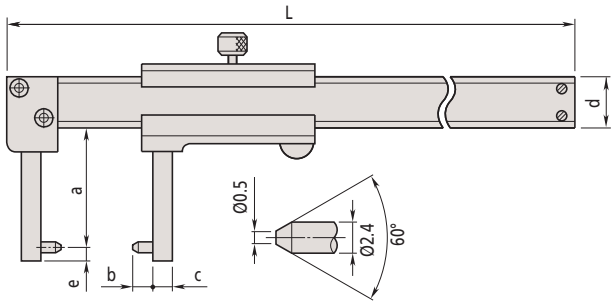

536-152
Point jaw type

All products to be sold to commercial customers. Product illustrations are without obligation. Product descriptions, in particular any and all technical specifications, are only binding when explicitly agreed upon. For suggested retail prices, please refer to the separate price list.

Knife-Edge Caliper

Series 573

These caliper are a knife-edge type and offer you the following benefits:
- Specially designed to let you take inside measurements in hard-to-reach places.
- With long narrow jaws.

Safety Dust- and Water-Protected
www.tuv.com ID 2011207400

573-642-20

Metric

No.	Range [mm]	Accuracy	Thumb roller	Mass [g]
573-642-20	10,1-200	±0,05 mm	●	227
573-643-20	10,1-200	±0,05 mm		227

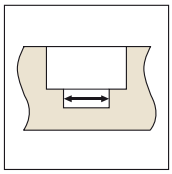

Functions	Series 573
ORIGIN (ABS-Zero)	●
Auto Power OFF after 20 min. non use	●
Low voltage alarm	●
Data output	●

Specifications

Accuracy	Refer to the list of specifications (excluding quantizing error)
Digital step	0,01 mm
Max. response speed	Unlimited
Battery life	approx. 5 years
Display	LCD, Character Height 9 mm
Delivered	In a case, including 1 battery

Optional accessories

No.	Description
05CZA624	Digimatic Cable with Data Button IP Type, 1m, Caliper Type
05CZA625	Digimatic Cable with Data Button IP Type, 2m, Caliper Type
02AZD790A	U-WAVE T Connection Cable A, with Data Button IP Caliper Type
06ADV380A	USB Input Tool Direct (Digimatic USB), with Data Button IP Caliper Type

Consumable spares

No.	Description
938882	Battery SR44 1.5V

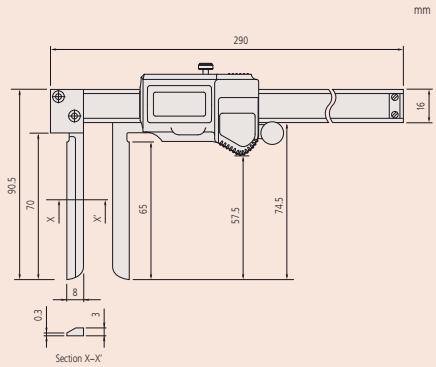

Series 536

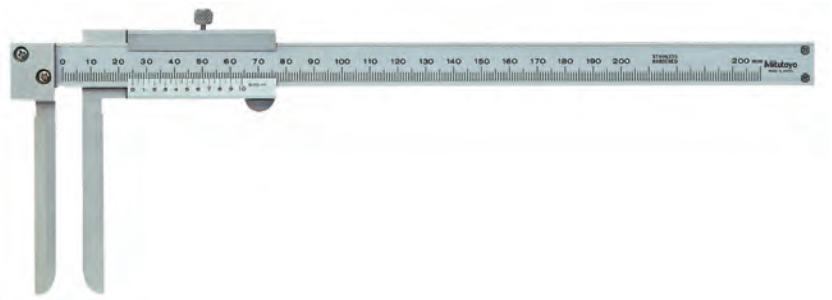

536-142

Metric

No.	Range [mm]	Mass [g]
536-142	10,1-200	210

Specifications

Accuracy	±0,12 mm
Graduation	0,05mm
Delivered	In a case

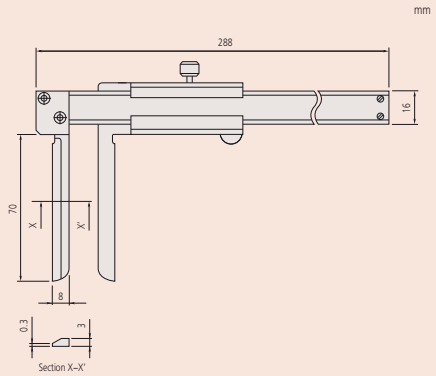

All products to be sold to commercial customers. Product illustrations are without obligation. Product descriptions, in particular any and all technical specifications, are only binding when explicitly agreed upon. For suggested retail prices, please refer to the separate price list.

ABSOLUTE Digimatic Inside Caliper

Series 573

– Specially designed for inside measurements in hard-to-reach places.

Functions	Series 573
ORIGIN (ABS-Zero)	●
OFFSET*	●
Auto Power OFF after 20 min. non use	●
Low voltage alarm	●
Data output	●

Specifications

Accuracy	Refer to the list of specifications (excluding quantizing error)
Digital step	0,01 mm
Max. response speed	Unlimited
Battery life	approx. 5 years
Display	LCD, Character Height 9 mm
Delivered	In a case, including 1 battery

Optional accessories

No.	Description
05CZA624	Digimatic Cable with Data Button IP Type, 1m, Caliper Type
05CZA625	Digimatic Cable with Data Button IP Type, 2m, Caliper Type
02AZD790A	U-WAVE T Connection Cable A, with Data Button IP Caliper Type
06ADV380A	USB Input Tool Direct (Digimatic USB), with Data Button IP Caliper Type

Consumable spares

No.	Description
938882	Battery SR44 1.5V

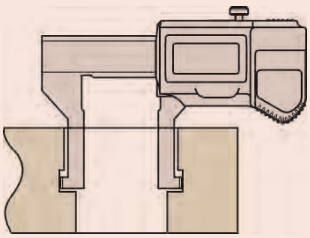

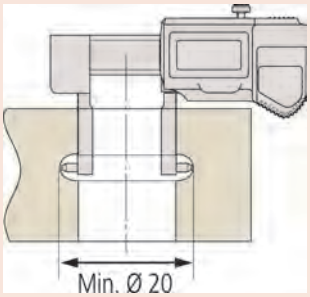

* 20 mm

573-645-20

573-646-20

Metric

No.	Range [mm]	Accuracy	Thumb roller	Mass [g]
573-645-20	10,1-160	±0,05 mm	●	147
573-647-20	10,1-160	±0,05 mm		147

Metric Point jaw type

No.	Range [mm]	Accuracy	Thumb roller	Mass [g]
573-646-20	20,1-170	±0,03 mm	●	157
573-648-20	20,1-170	±0,03 mm		157

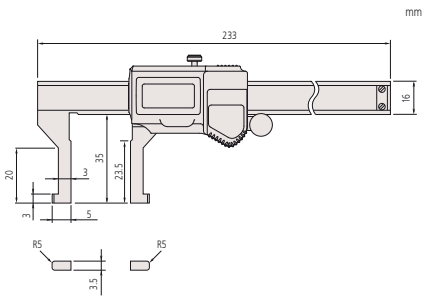

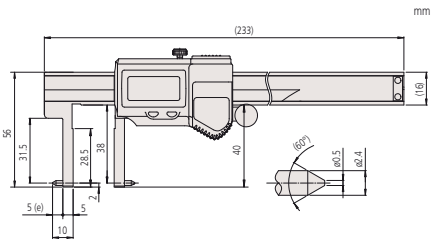

Point jaw type

All products to be sold to commercial customers. Product illustrations are without obligation. Product descriptions, in particular any and all technical specifications, are only binding when explicitly agreed upon. For suggested retail prices, please refer to the separate price list.

Inside Caliper

Series 536

– Specially designed for inside measurements in hard-to-reach places.

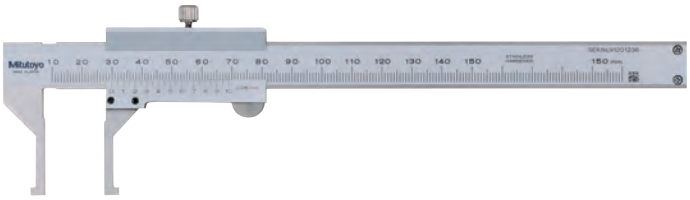

536-145

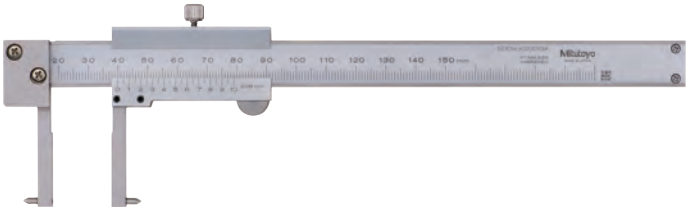

536-146
Point jaw type

Specifications

Accuracy	Refer to the list of specifications
Graduation	0,05mm
Delivered	In a case

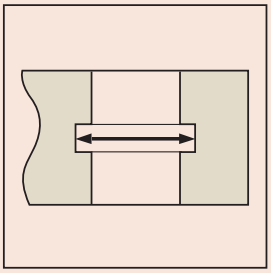

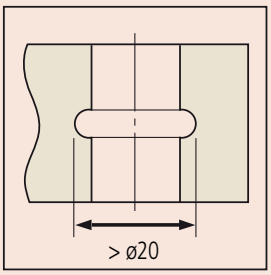

Metric

No.	Range [mm]	Accuracy	Mass [g]
536-145	10,1-150	±0,05 mm	130

Metric Point jaw type

No.	Range [mm]	Accuracy	a [mm]	b [mm]	c [mm]	d [mm]	e [mm]	f [mm]	g [mm]	Mass [g]
536-146	20,1-150	±0,05 mm	229	16	38	31	5	5	2	140
536-147	30,1-300	±0,08 mm	403	20	98	89	5	10	2	370
536-148	70,1-450	±0,1 mm	610	25	145	136	10	25	5	1250
536-149	70,1-600	±0,12 mm	750	25	145	136	10	25	5	1430

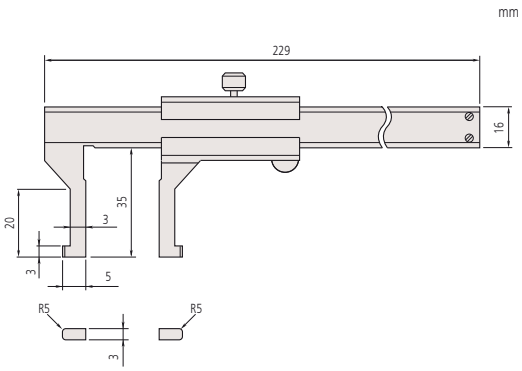

536-145

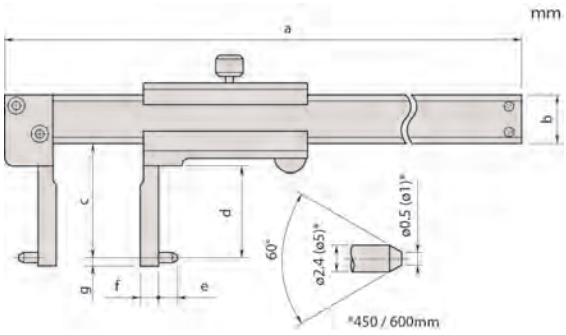

Point jaw type

All products to be sold to commercial customers. Product illustrations are without obligation. Product descriptions, in particular any and all technical specifications, are only binding when explicitly agreed upon. For suggested retail prices, please refer to the separate price list.

Tube Thickness Caliper

Functions	Series 573
ORIGIN (ABS-Zero)	●
Auto Power OFF after 20 min. non use	●
Low voltage alarm	●
Data output	●

Specifications

Accuracy	Refer to the list of specifications (excluding quantizing error)
Digital step	0,01 mm
Max. response speed	Unlimited
Battery life	approx. 5 years
Display	LCD, Character Height 9 mm
Delivered	In a case, including 1 battery

Optional accessories

No.	Description
05CZA624	Digimatic Cable with Data Button IP Type, 1m, Caliper Type
05CZA625	Digimatic Cable with Data Button IP Type, 2m, Caliper Type
02AZD790A	U-WAVE T Connection Cable A, with Data Button IP Caliper Type
06ADV380A	USB Input Tool Direct (Digimatic USB), with Data Button IP Caliper Type

Consumable spares

No.	Description
938882	Battery SR44 1.5V

Specifications

Accuracy	±0,05 mm
Graduation	0,05mm
Delivered	In a case

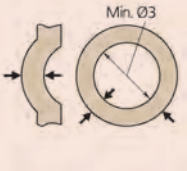

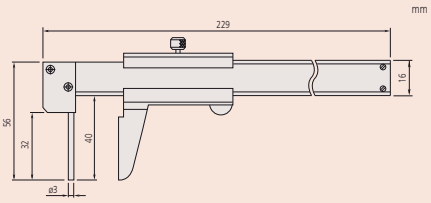

Series 573

These tube thickness calipers are designed especially for round-shaped workpieces.
They offer you the following benefits:
– The beam-mounted jaw is a round bar that lets you easily measure tube wall thickness.

573-661-20

Metric

No.	Range [mm]	Accuracy	Thumb roller	Mass [g]
573-661-20	0-150	±0,05 mm	●	167
573-662-20	0-150	±0,05 mm		167

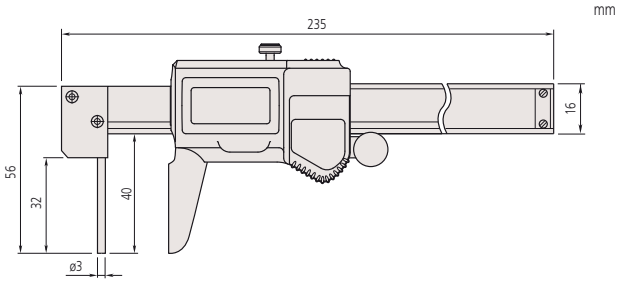

Series 536

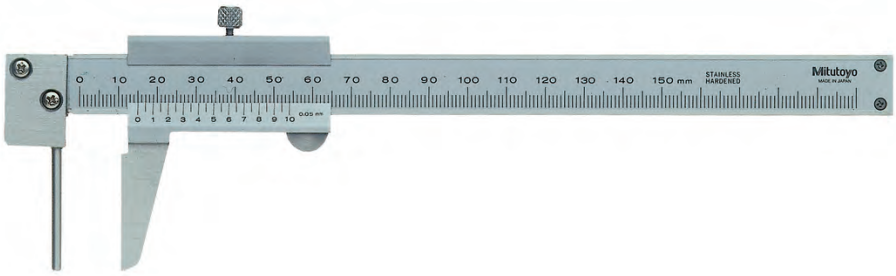

536-161

Metric

No.	Range [mm]	Mass [g]
536-161	0-150	150

All products to be sold to commercial customers. Product illustrations are without obligation. Product descriptions, in particular any and all technical specifications, are only binding when explicitly agreed upon. For suggested retail prices, please refer to the separate price list.

Vernier Hook Type Caliper

Series 536

These vernier hook type calipers enable you to measure the width of grooves and lands inside bores and recesses.

536-171

536-172

Metric

No.	Range [mm]	Inside measuring from	L [mm]	a [mm]	b [mm]	c [mm]	d [mm]	e [mm]	f [mm]	g [mm]	Mass [g]
536-171	0-200	10,1 mm	320	28			12	4	5	3,5	170
536-172	0-200	2,1 mm	320	28	28,5	20	12	4	1	3,5	200

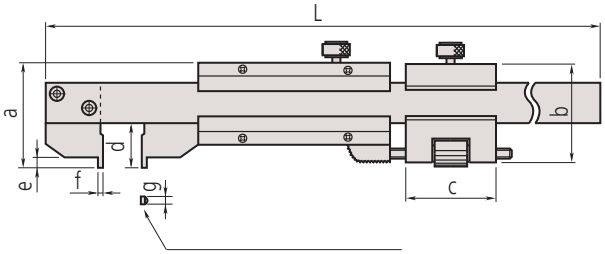

Measuring face
536-171: Radius 5 mm
536-172: flat

Specifications

Accuracy	±0,03 mm
Graduation	0,02mm
Delivered	In a case

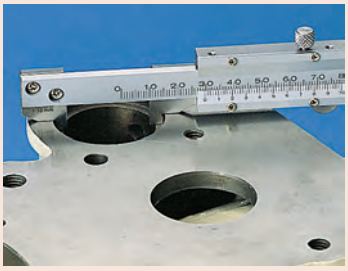

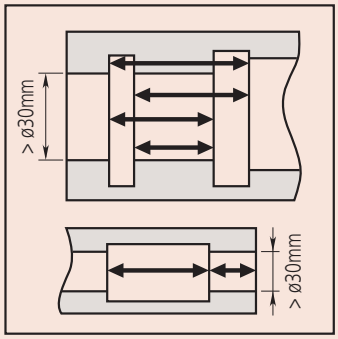

All products to be sold to commercial customers. Product illustrations are without obligation. Product descriptions, in particular any and all technical specifications, are only binding when explicitly agreed upon. For suggested retail prices, please refer to the separate price list.

Optional Accessory for Calipers

Depth base attachment

This is an optional depth base attachment for calipers.
It offers you the following benefits:
- For digital, vernier and dial calipers which have a depth measuring bar.
- Finely ground base surface.
- Secure locking clamp.

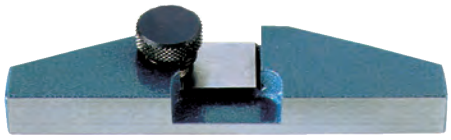

050084-10

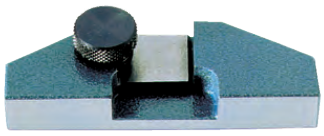

050083-10

Metric

No.	Applicable measuring range of caliper	a [mm]	b [mm]	c [mm]	d [mm]	e [mm]	Mass [g]
050083-10	100, 150 and 200 mm	25	75	24,5	9	16	130
050084-10	100, 150 and 200 mm	25	100	24,5	9	16	160
050085-10	300 mm	30	125	28,5	11,5	20	270

Sample application

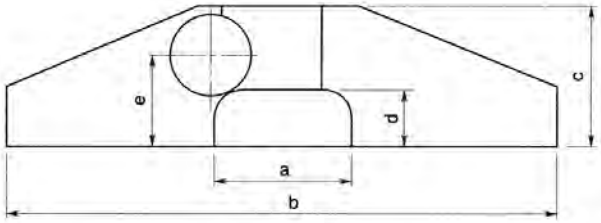

All products to be sold to commercial customers. Product illustrations are without obligation. Product descriptions, in particular any and all technical specifications, are only binding when explicitly agreed upon. For suggested retail prices, please refer to the separate price list.

Depth Micrometer
Page 205

Depth Gauge
Page 208

Depth Gauge Accessories
Page 218

All products to be sold to commercial customers. Product illustrations are without obligation. Product descriptions, in particular any and all technical specifications, are only binding when explicitly agreed upon. For suggested retail prices, please refer to the separate price list.

Depth Micrometer

Series 128

This micrometer allows you to measure depth and offers you the following features:
- ø4mm measuring rod.
- Ratchet stop provides you with constant measuring force.
- Measuring rod lock.
- Carbide-tipped measuring rod model is available.

Specifications

Measuring force	5-10 N
Measuring span	25 mm
Spindle pitch	0,5 mm with spindle lock
Micrometer Head Feed (0-25 mm)	±3 µm
Flatness of reference surface (base)	1,3 µm (63,5 mm) 2 µm (101,6 mm)
Flatness of measuring face (rod)	0,3 µm
Parallelism between measuring face (rod) and reference surface (base)	(4+L/50) µm L=max. measuring length (mm)
Measuring surfaces	Hardened, precision ground, micro-lap finish
Base	Hardened tool steel
Graduation	0,01 mm
Scale	thimble and sleeve satin chrome finish, ø 18 mm
Delivered	Including box and key

128-101

Metric

No.	Range [mm]	Base (W x T)	Mass [g]
128-101	0-25	63,5 x 16 mm	200
128-102	0-25	101,6 x 16 mm	250

Metric Carbide-tipped measuring rod

No.	Range [mm]	Base (W x T)	Mass [g]
128-103	0-25	63,5 x 16 mm	200
128-104	0-25	101,6 x 16 mm	250

Also available! Inch Models

All products to be sold to commercial customers. Product illustrations are without obligation. Product descriptions, in particular any and all technical specifications, are only binding when explicitly agreed upon. For suggested retail prices, please refer to the separate price list.

Depth Micrometer with Interchangeable Rods

Series 129

This interchangeable rod type micrometer can be used for wide range measurements.
It offers you the following benefits:
- ø4mm interchangeable rods, with lapped measuring surfaces, enable you to make wide-range measurement
- The ratchet stop provides constant measuring force.
- Measuring rod lock.

129-112

Metric — Base 101,6 x 16 mm

No.	Range [mm]	Number of rods	Mass [g]
129-155	0-25		290
129-113	0-50	2	310
129-114	0-75	3	330
129-115	0-100	4	355
129-116	0-150	6	410
129-153	0-300	12	640

Metric — Base 63,5 x 16 mm

No.	Range [mm]	Number of rods	Mass [g]
129-154	0-25		240
129-109	0-50	2	260
129-110	0-75	3	280
129-111	0-100	4	310
129-112	0-150	6	370
129-152	0-300	12	600

Also available! Inch Models

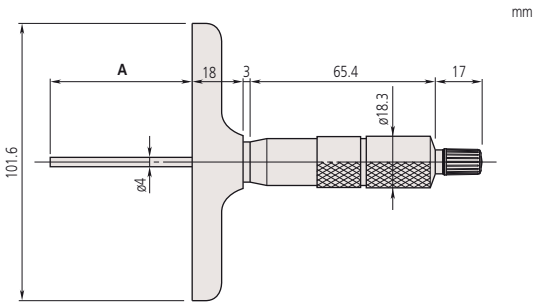

A = Range

Specifications

Measuring force	5-10 N
Measuring span	25 mm
Spindle pitch	0,5 mm, with spindle lock
Micrometer Head Feed (0-25 mm)	±3 µm
Zero point errors of rods	±4 µm (0-150 mm) ±6 µm (0-300 mm)
Flatness of reference surface (base)	1,3 µm for 63,5 mm 2 µm for 101,6 mm
Flatness of measuring face (rod)	0,3 µm
Parallelism between measuring face (rod) and reference surface (base)	(4+ L/50) µm L=max. measuring length (mm)
Measuring surfaces	Hardened, precision ground, micro-lap finish
Base	Hardened tool steel
Graduation	0,01 mm
Scale	Thimble and sleeve satin chrome finish ø18 mm
Delivered	Including box and key

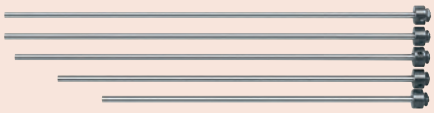

All products to be sold to commercial customers. Product illustrations are without obligation. Product descriptions, in particular any and all technical specifications, are only binding when explicitly agreed upon. For suggested retail prices, please refer to the separate price list.

Digimatic Depth Micrometer with Interchangeable Rod

Functions	Series 329
ZERO/ABS	●
DATA/HOLD	●
Lock function	●
Auto Power OFF after 20 min. non use	●
2 x PRESET	●
Low voltage alarm	●
Data output	●

Specifications

Digital step	0,001 mm
Measuring force	5-10 N
Scale	Thimble and sleeve satin chrome finish, ø18 mm
Measuring span	25 mm
Spindle pitch	0,5 mm with spindle lock
Zero point errors of rods	±4 µm (0-150 mm) ±6 µm (0-300 mm)
Micrometer Head Feed (0-25 mm) (excluding quantizing error)	±3 µm
Flatness of reference surface (base)	2 µm
Flatness of measuring face (rod)	0,3 µm
Parallelism between measuring face (rod) and reference surface (base)	(4+L/50) µm L = max. measuring length (mm)
Measuring surfaces	Hardened, precision ground, micro-lap finish
Base	Hardened tool steel
Battery life	approx. 2,4 years
Delivered	Including box, key and 1 battery

Optional accessories

No.	Description
05CZA662	Digimatic Cable with Data Button IP Type, 1m, Micrometer Type
05CZA663	Digimatic Cable with Data Button IP Type, 2m, Micrometer Type
02AZD790B	U-WAVE T Connection Cable B, with Data Button IP Micrometer Type
06ADV380B	USB Input Tool Direct (Digimatic USB), with Data Button IP Micrometer Type

Consumable spares

No.	Description
938882	Battery SR44 1.5V

Series 329

This interchangeable rod type micrometer can be used for wide range measurements.
It offers you the following benefits:
- ø4mm interchangeable rods, with lapped measuring surfaces, enable you to make wide-range measurement
- The ratchet stop provides constant measuring force.
- Measuring rod lock.

329-250-30

Metric

No.	Range [mm]	Base (W x T)	Number of rods	Mass [g]
329-250-30	0-150	101,6 x 16 mm	6	540
329-251-30	0-300	101,6 x 16 mm	12	790

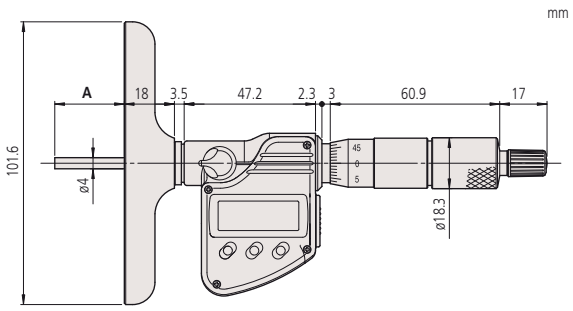

A = Range

All products to be sold to commercial customers. Product illustrations are without obligation. Product descriptions, in particular any and all technical specifications, are only binding when explicitly agreed upon. For suggested retail prices, please refer to the separate price list.

Mitutoyo

ABSOLUTE Digimatic Indicator Depth Gauge

Series 547

ABSOLUTE®

This ABSOLUTE Digimatic Indicator Depth Gauge offers you the following benefits:
- It is equipped with the ABSOLUTE Digimatic Indicator ID-C.
- It has a hardened, precision ground and micro-lapped reference face on its base.

547-211

Metric — With indicator No. 543-390BD

No.	Range [mm]	Base flatness	Accuracy	Base size [mm]	Mass [g]
547-251	0-200	2 µm	± 5 µm	63,5 x 16	290
547-252	0-200	2 µm	± 5 µm	101,6 x 16	340

Metric — With indicator No. 543-400BD

No.	Range [mm]	Base flatness	Accuracy	Base size [mm]	Mass [g]
547-211	0-200	5 µm	± 20 µm	63,5 x 16	290
547-212	0-200	5 µm	± 20 µm	101,6 x 16	340

Also available! Inch/Metric Models

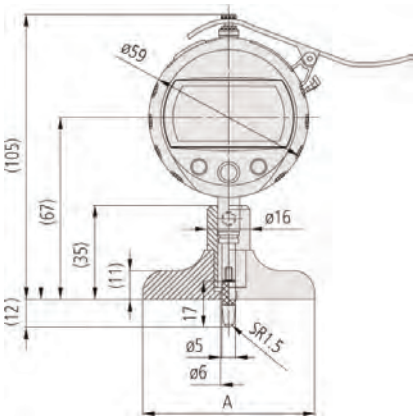

547-211, 547-251 A=63.5 mm
547-212, 547-252 A=101,6 mm

Functions	Series 547
ZERO/ABS	●
GO/±NG judgement	●
Digimatic data output	●
DATA/HOLD	●
Lock function	●
PRESET	●
Counting direction switchable	●
Calculation function	●

Specifications

Accuracy	Refer to the list of specifications (excluding quantizing error)
Stroke	12,7 mm
Contact point	Carbide ball
Alarm	Low voltage, counting value composition error, overflow error, tolerance limit setting error
Scale	Capacitance type ABSOLUTE linear encoder
Power supply	1 battery SR-44
Battery life	approx. 7000 hours
Measuring force	≤ 1,5 N
Delivered	Including Box and extensions 10, 20, 30 (2 pcs.), 100 mm
Max. response speed	Unlimited

Optional accessories

No.	Description
905338	Digimatic Cable, Flat Straight Type, 1m
905409	Digimatic Cable, Flat Straight Type, 2 m
02AZD790F	U-WAVE T Connection Cable F, Flat Straight Type
06ADV380F	USB Input Tool Direct (Digimatic USB) cable, 2m, Flat Straight Type

Consumable spares

No.	Description
938882	Battery SR44 1.5V
21AZB149	Lifting Lever, S-Type Series 2,3,4 (up to 10mm)
21JAA224	Contact Element Ball Point, 14mm Length, Carbide, Metric

All products to be sold to commercial customers. Product illustrations are without obligation. Product descriptions, in particular any and all technical specifications, are only binding when explicitly agreed upon. For suggested retail prices, please refer to the separate price list.

Dial Indicator Depth Gauge

Series 7

This rectangular base dial indicator depth gauge offers you the following benefits:
- Rectangular base.
- It has a hardened, precision ground and micro-lapped reference face on its base.

Specifications

Graduation	0,01 mm

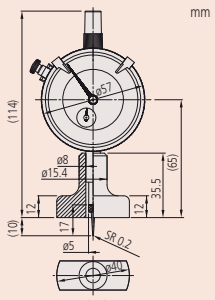

7210

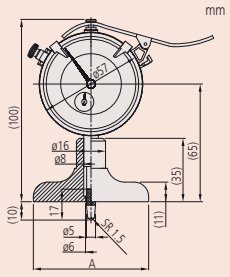

7211 A= 63.5mm
7212 A= 101.6mm

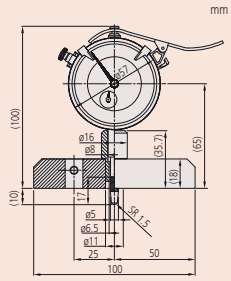

7220

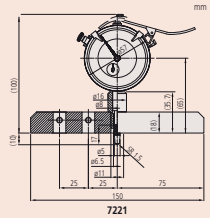

7221

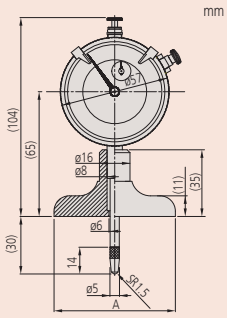

7213 A= 63.5mm
7214 A= 101.6mm

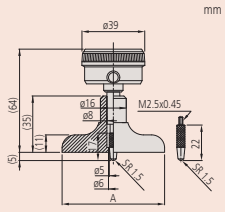

7231 A= 63.5mm

7211

7214

7231

Metric With horizontal indicator No. 1162

No.	Range [mm]	Stroke [mm]	Base flatness [µm]	Accuracy	Measuring force [N]	Base size [mm]	Probe tip	Extension rods	Mass [g]
7231	0-200	5	5	±15 µm	≤ 1,4	63,5 x 16	Ball R = 1,5 mm	10, 20, 30, 30, 100 mm	200

Metric With indicator No. 2902SB

No.	Range [mm]	Stroke [mm]	Base flat-ness [µm]	Accuracy	Measuring force [N]	Base size [mm]	Probe tip	Extension rods	Mass [g]
7210	0-10	10	5	±15 µm	≤ 1,4	40 x 16	Needle R = 0,2 mm		200
7211	0-200	10	5	±15 µm	≤ 1,4	63,5 x 16	Ball R = 1,5 mm	10, 20, 30, 30, 100 mm	245
7212	0-200	10	5	±15 µm	≤ 1,4	101,6 x 16	Ball R = 1,5 mm	10, 20, 30, 30, 100 mm	295
7220	0-200	10	5	±15 µm	≤ 1,4	100 x 18	Ball R = 1,5 mm	10, 20, 30, 30, 100 mm	374
7221	0-200	10	5	±15 µm	≤ 1,4	150 x 18	Ball R = 1,5 mm	10, 20, 30, 30, 100 mm	820

Metric With indicator No. 2952SB

No.	Range [mm]	Stroke [mm]	Base flatness [µm]	Accuracy	Measuring force [N]	Base size [mm]	Probe tip	Extension rods	Mass [g]
7213	0-210	30	5	±30 µm	≤ 2,5	63,5 x 16	Ball R = 1,5 mm	30, 60, 90 mm	265
7214	0-210	30	5	±30 µm	≤ 2,5	101,6 x 16	Ball R = 1,5 mm	30, 60, 90 mm	315

Also available! Inch Models

All products to be sold to commercial customers. Product illustrations are without obligation. Product descriptions, in particular any and all technical specifications, are only binding when explicitly agreed upon. For suggested retail prices, please refer to the separate price list.

Mitutoyo

Dial Indicator Depth Gauge

Series 7

This round base type dial indicator depth gauge offers you the following benefits:
- Round base type
- It has a hardened, precision ground and micro-lapped reference face on its base.

7222 7224

Metric

Circular base with indicator No. 2902SB.

No.	Range [mm]	Stroke [mm]	Base flatness [µm]	Accuracy	Measuring force [N]	Base size [mm]	Probe tip	Mass [g]
7222	10	10	5	±15 µm	≤ 1,4	ø 16	Needle R = 0,2 mm	165
7223	10	10	5	±15 µm	≤ 1,4	ø 25	Ball R = 1,5 mm	180
7224	10	10	5	±15 µm	≤ 1,4	ø 40	Ball R = 1,5 mm	195

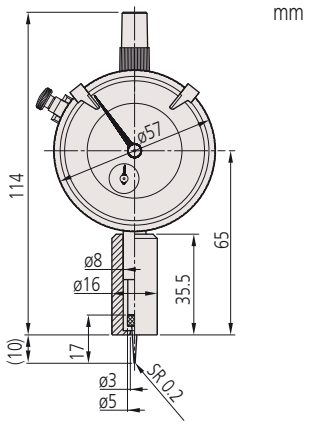

7222

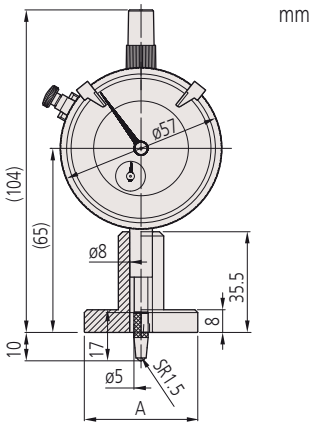

7223 A= ø25mm
7224 A= ø40mm

Specifications

Graduation	0,01 mm

Consumable spares

No.	Description
137413	Contact Element Needle, R 0,2mm, 17mm Length, Steel, Metric
21JAA224	Contact Element Ball Point, 14mm Length, Carbide, Metric
21JAA226	Contact Element Ball Point, 22mm Length, Carbide, Metric

All products to be sold to commercial customers. Product illustrations are without obligation. Product descriptions, in particular any and all technical specifications, are only binding when explicitly agreed upon. For suggested retail prices, please refer to the separate price list.

ABSOLUTE Digimatic Depth Gauge

Functions	Series 571
ORIGIN (ABS-Zero)	●
ZERO/ABS	●
ON/OFF	●
Low voltage alarm	●
Data output	●

Specifications

Accuracy	Refer to the list of specifications (excluding quantizing error)
Digital step	0,01 mm
Max. response speed	Unlimited
Repeatability	0,01 mm
Battery life	approx. 18000 hours (150/200 mm) approx. 20000 hours (>200 mm)
Display	LCD; character height 9 mm (150/200/300 mm), 10 mm (>300 mm)
Delivered	In a box including 1 battery

Optional accessories

No.	Description
959149	Digimatic Cable, Straight, Data Button, 1m
959150	Digimatic Cable, Straight, Data Button, 2m
02AZD790C	U-WAVE T Connection Cable C, Straight, with Data Button
06ADV380C	USB Input Tool Direct (Digimatic USB), Straight, with Data Button
959143	Data Hold Unit
900370	Extension Base, Depth Gauge, 180mm width for up to 300mm range
900371	Extension Base, Depth Gauge, 260mm width for up to 300mm range
900372	Extension Base, Depth Gauge, 320mm width for up to 300mm range

Consumable spares

No.	Description
938882	Battery SR44 1.5V

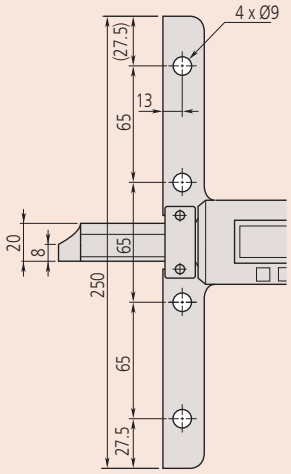

> 300 mm range

Series 571

ABSOLUTE®

This is a standard model depth gauge that lets you take accurate measurements. It offers you the following benefits:

- ABSOLUTE System gives you reliable measurements.
- Its base and measuring faces are hardened and micro-lapped for robustness.
- Large character height of 9mm makes measurements easy to read.
- Exceptional battery life.

571-201-30

Metric

No.	Range [mm]	Accuracy	L [mm]	Base (W x T)	Mass [g]
571-201-30	0-150	±0,02 mm	239	100 x 6 mm	207
571-202-30	0-200	±0,02 mm	289	100 x 6 mm	227
571-203-20	0-300	±0,03 mm	403	100 x 6 mm	257
571-204-10	0-450	±0,05 mm	635	250 x 10 mm	1270
571-205-10	0-600	±0,05 mm	785	250 x 10 mm	1400
571-206-10	0-750	±0,06 mm	935	250 x 10 mm	1530
571-207-10	0-1000	±0,07 mm	1200	250 x 10 mm	1760

1

Also available! Inch/Metric Models

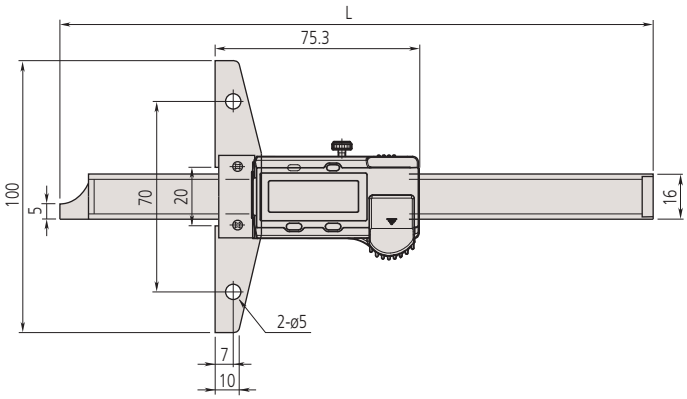

Up to 300 mm range

All products to be sold to commercial customers. Product illustrations are without obligation. Product descriptions, in particular any and all technical specifications, are only binding when explicitly agreed upon. For suggested retail prices, please refer to the separate price list.

Mitutoyo

ABSOLUTE Digimatic Depth Gauge

Series 571

This depth gauge is IP67 coolant proof and offers you the following benefits:

- ABSOLUTE System gives you reliable measurements.
- Its base and measuring faces are hardened and micro-lapped for robustness.
- It has excellent resistance against water and dust (IP67 protection level) enabling you to use it in machining situations that include splashing coolant fluid.
- Extremely resistant to both coolants and lubricants.

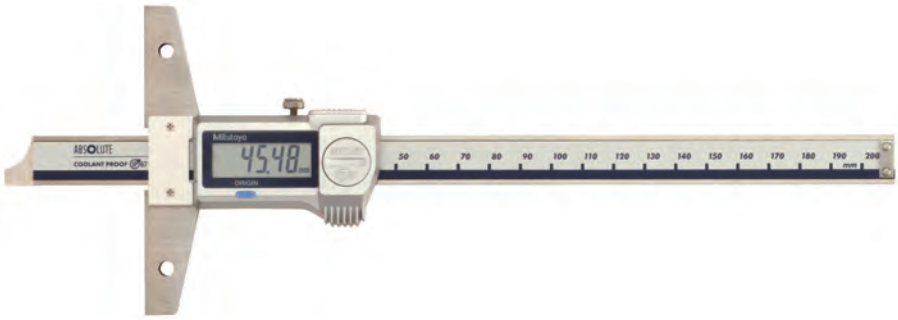

571-252-20

Metric

No.	Range [mm]	Accuracy	L [mm]	Base (W x T)	Mass [g]
571-251-20	0-150	±0,02 mm	237	100x 6 mm	199
571-252-20	0-200	±0,02 mm	287	100 x 6 mm	219
571-253-10	0-300	±0,03 mm	404	100 x 6,3 mm	357

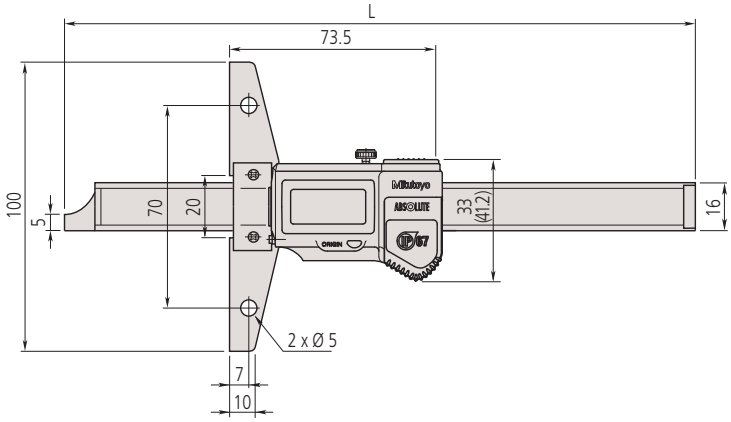

Range: 0-150 mm, 0-200 mm

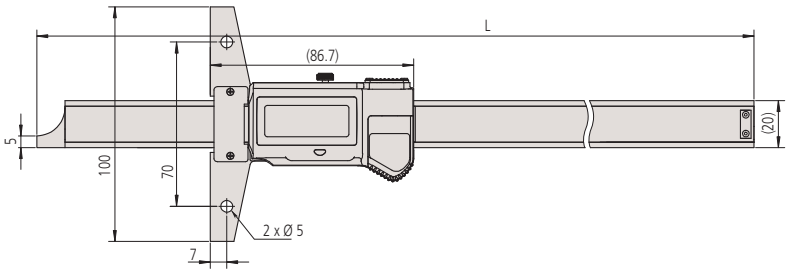

Range: 0-300 mm

Functions	Series 571
ORIGIN (ABS-Zero)	●
Auto Power OFF after 20 min. non use	●
Low voltage alarm	●
Data output	●

Specifications

Accuracy	Refer to the list of specifications (excluding quantizing error)
Digital step	0,01 mm
Max. response speed	Unlimited
Repeatability	0,01 mm
Battery life	approx. 5 years (150, 200 mm) 5000 hours (300 mm)
Display	LCD, Character Height 9 mm (150, 200 mm) 10,2 mm (300 mm)
Delivered	In a box including 1 battery

Optional accessories

No.	Description
05CZA624	Digimatic Cable with Data Button IP Type, 1m, Caliper Type
05CZA625	Digimatic Cable with Data Button IP Type, 2m, Caliper Type
02AZD790A	U-WAVE T Connection Cable A, with Data Button IP Caliper Type
06ADV380A	USB Input Tool Direct (Digimatic USB), with Data Button IP Caliper Type
900370	Extension Base, Depth Gauge, 180mm width for up to 300mm range
900371	Extension Base, Depth Gauge, 260mm width for up to 300mm range
900372	Extension Base, Depth Gauge, 320mm width for up to 300mm range

Consumable spares

No.	Description
938882	Battery SR44 1.5V

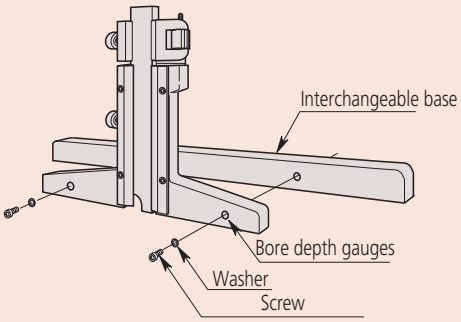

Mounting the interchangeable base

All products to be sold to commercial customers. Product illustrations are without obligation. Product descriptions, in particular any and all technical specifications, are only binding when explicitly agreed upon. For suggested retail prices, please refer to the separate price list.

ABSOLUTE Digimatic Depth Gauge IP67 Hook/Pin Type

Functions	Series 571 571-254-20 571-255-20	Series 571 571-301-20 571-302-20
ORIGIN (ABS-Zero)	●	●
OFFSET	●	
Auto Power OFF after 20 min. non use	●	●
Low voltage alarm	●	●
Data output	●	●

Specifications

Accuracy	±0,03 mm (excluding quantizing error)
Digital step	0,01 mm
Max. response speed	Unlimited
Repeatability	0,01 mm
Battery life	approx. 5 years
Display	LCD, Character Height 9 mm
Delivered	In a case including 1 battery

Optional accessories

No.	Description
05CZA624	Digimatic Cable with Data Button IP Type, 1m, Caliper Type
05CZA625	Digimatic Cable with Data Button IP Type, 2m, Caliper Type
02AZD790A	U-WAVE T Connection Cable A, with Data Button IP Caliper Type
06ADV380A	USB Input Tool Direct (Digimatic USB), with Data Button IP Caliper Type
900370	Extension Base, Depth Gauge, 180mm width for up to 300mm range
900371	Extension Base, Depth Gauge, 260mm width for up to 300mm range
900372	Extension Base, Depth Gauge, 320mm width for up to 300mm range

Consumable spares

No.	Description
938882	Battery SR44 1.5V

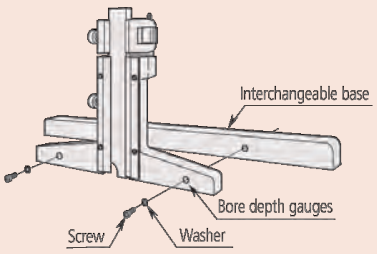

Mounting the interchangeable base

Series 571

– Direct reading for either measuring surface is obtained by pressing the OFFSET function, which compensates for the 10 mm width of the hook.

571-255-20

571-302-20

Metric — Hook Type

No.	Depth range	Hook range	Base (W x T)	L [mm]	Mass [g]
571-254-20	10,1-160 mm	0-150 mm	100 x 6 mm	247	216
571-255-20	10,1-210 mm	0-200 mm	100 x 6 mm	297	236

Metric — Pin Type

No.	Range [mm]	Base (W x T)	L [mm]	Mass [g]
571-301-20	0-150	100 x 6 mm	237	207
571-302-20	0-200	100 x 6 mm	287	227

mm

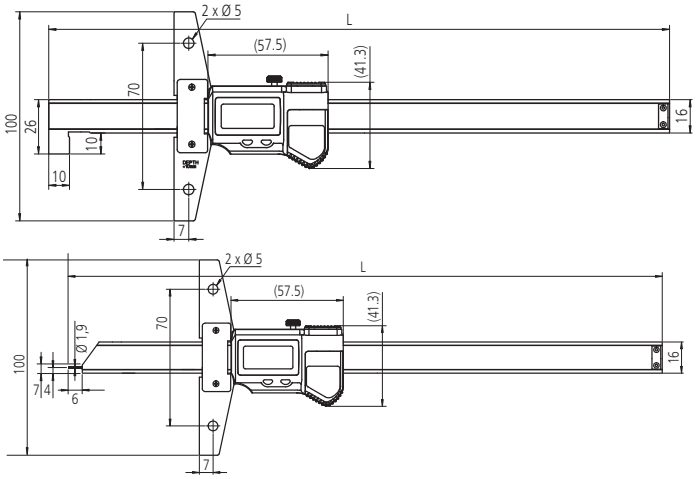

All products to be sold to commercial customers. Product illustrations are without obligation. Product descriptions, in particular any and all technical specifications, are only binding when explicitly agreed upon. For suggested retail prices, please refer to the separate price list.

Vernier Depth Gauge

Series 527

This vernier depth gauge offers you the following benefits:
- Its base and measuring faces are hardened and micro-lapped for robustness.
- Fine adjustment models are available.

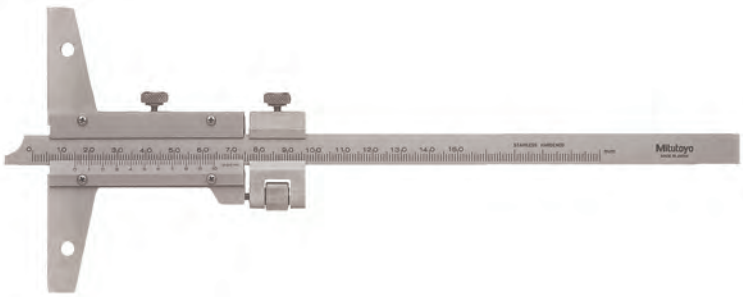

527-101

Metric

No.	Range [mm]	Graduation	Accuracy	Base (W x T)	L [mm]	Mass [g]
527-201	0-150	0,05 mm	±0,05 mm	100 x 6,5 mm	260	240
527-121	0-150	0,02 mm	±0,03 mm	100 x 6,5 mm	260	215
527-202	0-200	0,05 mm	±0,05 mm	100 x 6,5mm	310	260
527-122	0-200	0,02 mm	±0,03 mm	100 x 6,5mm	310	230
527-203	0-300	0,05 mm	±0,08 mm	100 x 6,5 mm	410	300
527-123	0-300	0,02 mm	±0,04 mm	100 x 6,5mm	410	265
527-204	0-600	0,05 mm	±0,1 mm	250 x 10 mm	800	1510
527-205	0-1000	0,05 mm	±0,15 mm	250 x 10mm	1200	1880

Metric

With fine adjustment

No.	Range [mm]	Graduation	Accuracy	Base (W x T)	L [mm]	Mass [g]
527-101	0-150	0,02 mm	±0,03 mm	100 x 6,5mm	260	280
527-102	0-200	0,02 mm	±0,03 mm	100 x 6,5mm	310	300
527-103	0-300	0,02 mm	±0,04 mm	100 x 6,5mm	410	350
527-104	0-600	0,02 mm	±0,05 mm	250 x 10mm	800	1510
527-105	0-1000	0,02 mm	±0,07 mm	250 x 10mm	1200	1880

Also available! Inch Models

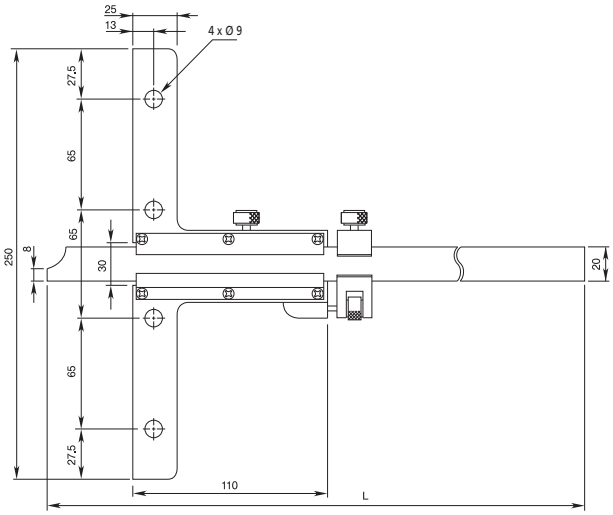

Over 300 mm range models

Specifications

Accuracy	Refer to the list of specifications

Optional accessories

No.	Description
900370	Extension Base, Depth Gauge, 180mm width for up to 300mm range
900371	Extension Base, Depth Gauge, 260mm width for up to 300mm range
900372	Extension Base, Depth Gauge, 320mm width for up to 300mm range

527-201 with 900372

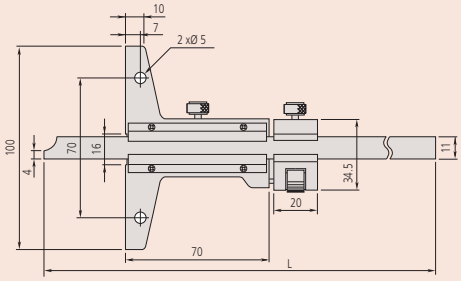

Up to 300 mm range models

All products to be sold to commercial customers. Product illustrations are without obligation. Product descriptions, in particular any and all technical specifications, are only binding when explicitly agreed upon. For suggested retail prices, please refer to the separate price list.

Vernier Depth Gauge Hook Type

Series 527

This hook type vernier depth gauge offers you the following benefits:
- The end of the beam is hook-shaped so you can take depth and thickness measurements of a projected portion or lip in a hole, as well as standard depth measurements.
- Fine adjustment models are available.

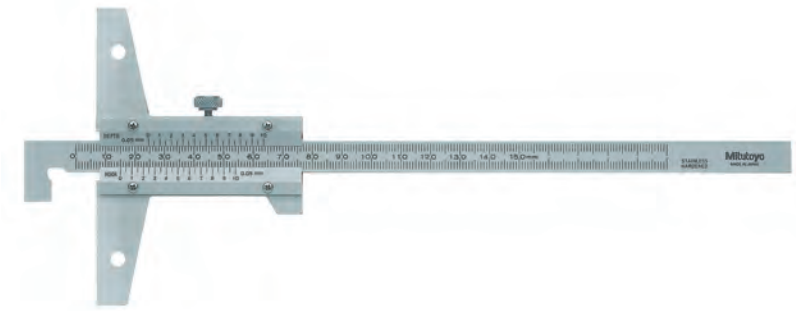

527-401

Specifications

Accuracy	Refer to the list of specifications

Optional accessories

No.	Description
900370	Extension Base, Depth Gauge, 180mm width for up to 300mm range
900371	Extension Base, Depth Gauge, 260mm width for up to 300mm range
900372	Extension Base, Depth Gauge, 320mm width for up to 300mm range

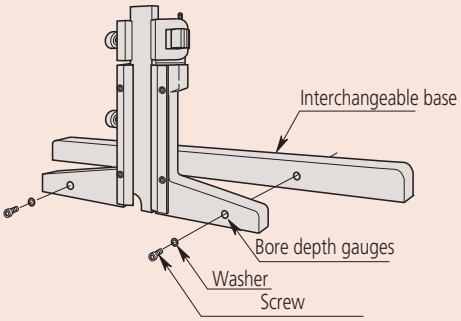

Mounting the interchangeable base

Metric

No.	Depth range	Hook range	Graduation	Accuracy	L [mm]	Mass [g]
527-401	10,1-150 mm	0-150 mm	0,05 mm	±0,05 mm	260	240
527-402	10,1-200 mm	0-200 mm	0,05 mm	±0,05 mm	310	240
527-403	10,1-300 mm	0-300 mm	0,05 mm	±0,08 mm	410	270

Metric With fine adjustment

No.	Depth range	Hook range	Graduation	Accuracy	L [mm]	Mass [g]
527-411	10,1-150 mm	0-150 mm	0,02 mm	±0,03 mm	260	280
527-412	10,1-200 mm	0-200 mm	0,02 mm	±0,03 mm	310	300
527-413	10,1-300 mm	0-300 mm	0,02 mm	±0,04 mm	410	350

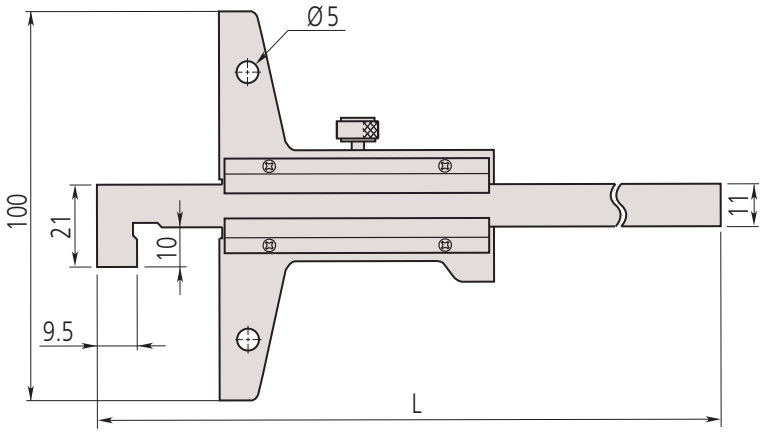

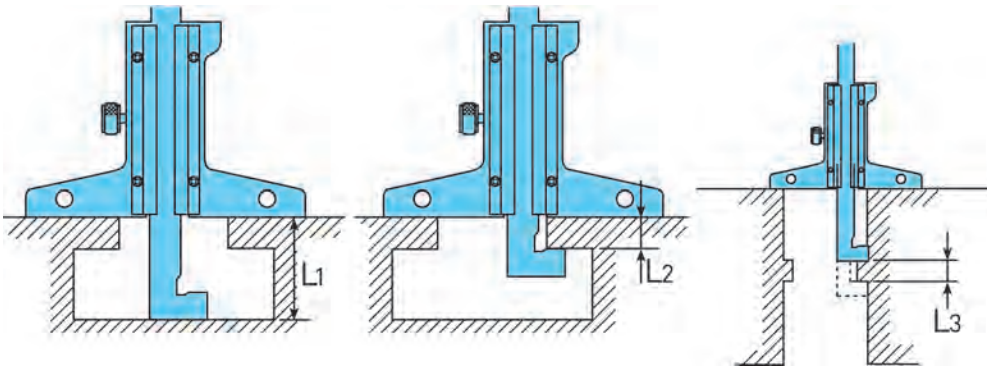

L1 = depth-vernier reading / L2 = hook-vernier reading / L3 = (depth-vernier reading) - (hook-vernier reading)

All products to be sold to commercial customers. Product illustrations are without obligation. Product descriptions, in particular any and all technical specifications, are only binding when explicitly agreed upon. For suggested retail prices, please refer to the separate price list.

Mitutoyo

Dial Depth Gauge

Series 527

This dial depth gauge offers you the following benefits:
- The dial is very easy-to-read.
- Its base and measuring faces are hardened and micro-lapped for robustness.
- You can make fine adjustments.

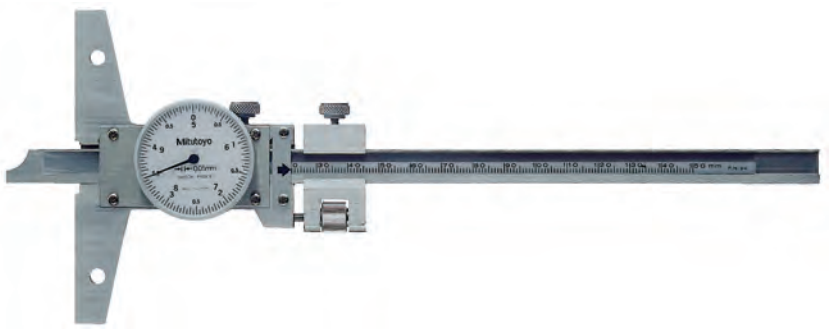

527-301-50

Metric

No.	Range [mm]	Accuracy	L [mm]	Mass [g]
527-301-50	0-150	±0,05 mm	260	280
527-302-50	0-200	±0,05 mm	310	300
527-303-50	0-300	±0,08 mm	410	340

Also available! Inch Models

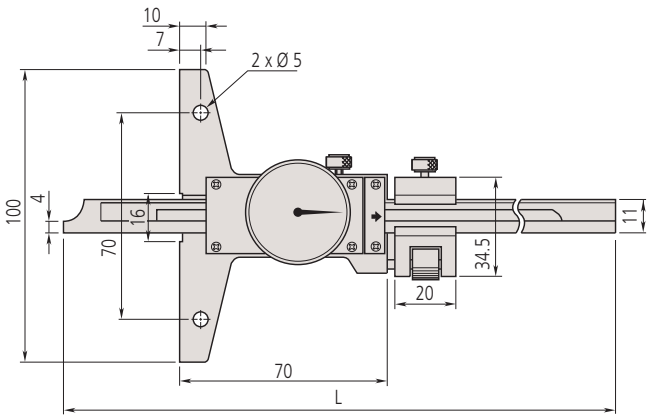

Specifications

Accuracy	Refer to the list of specifications
Graduation	0,05 mm
Base size	100 x 6,5 mm (W x T) mm

Optional accessories

No.	Description
900370	Extension Base, Depth Gauge, 180mm width for up to 300mm range
900371	Extension Base, Depth Gauge, 260mm width for up to 300mm range
900372	Extension Base, Depth Gauge, 320mm width for up to 300mm range

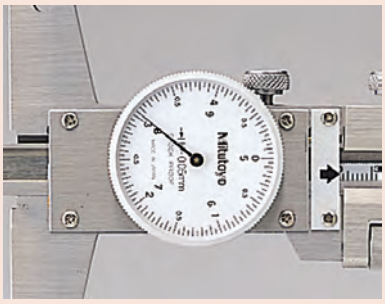

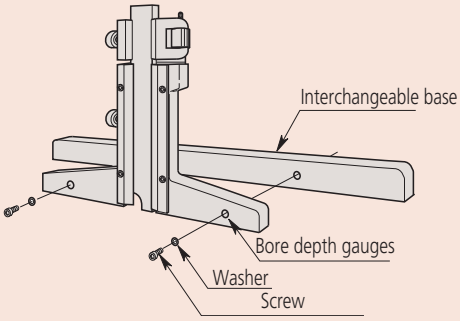

Mounting the interchangeable base

All products to be sold to commercial customers. Product illustrations are without obligation. Product descriptions, in particular any and all technical specifications, are only binding when explicitly agreed upon. For suggested retail prices, please refer to the separate price list.

Tyre Tread Depth Gauge

Functions	Series 571
ORIGIN (ABS-Zero)	●
Auto Power OFF after 20 min. non use	●
Low voltage alarm	●
Data output	●

Series 571

This is designed to measure tyre tread depth and offers you the following benefits:

- The ABSOLUTE feature of this gauge keeps track of the origin point (once set) for the entire life of the battery.
- It gives you SPC data output.

Safety Dust- and Water-Protected
www.tuv.com ID 2011207400

ABSOLUTE®

IP67

571-100-20

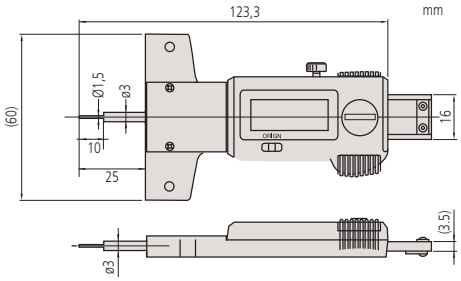

Specifications

Accuracy	Refer to the list of specifications (excluding quantizing error)
Digital step	0,01 mm
Max. response speed	unlimited
Repeatability	0,01 mm
Battery life	approx. 5 years
Display	LCD, Character height 9 mm
Delivered	Including 1 battery

Optional accessories

No.	Description
05CZA624	Digimatic Cable with Data Button IP Type, 1m, Caliper Type
05CZA625	Digimatic Cable with Data Button IP Type, 2m, Caliper Type
02AZD790A	U-WAVE T Connection Cable A, with Data Button IP Caliper Type
06ADV380A	USB Input Tool Direct (Digimatic USB), with Data Button IP Caliper Type

Consumable spares

No.	Description
938882	Battery SR44 1.5V

Metric

No.	Range [mm]	Accuracy	Mass [g]
571-100-20	0-25	±0,02 mm	160

All products to be sold to commercial customers. Product illustrations are without obligation. Product descriptions, in particular any and all technical specifications, are only binding when explicitly agreed upon. For suggested retail prices, please refer to the separate price list.

Mitutoyo

Optional Accessories for Depth Gauge

Extension bases

These optional extension bases can be fitted to depth gauge models up to 0-300mm range. They cannot be attached to 0-600mm or 0-1000mm range models.

900372

Metric

No.	L [mm]	A [mm]	B [mm]	Number of holes	Mass [g]
900370	180	70	55	2	200
900371	260	35	60	5	270
900372	320	70	55	4	345

Also available! Inch Models

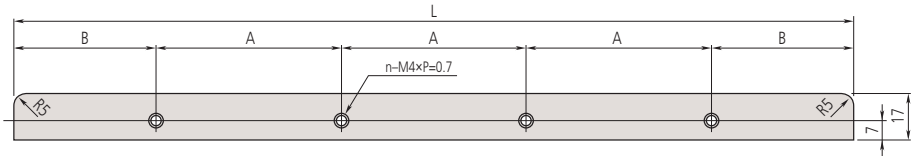

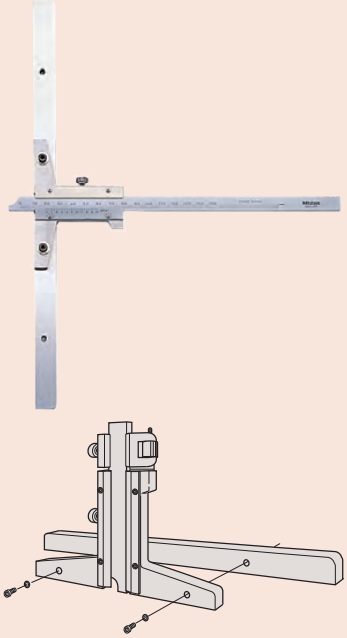

Attaching the extension base

All products to be sold to commercial customers. Product illustrations are without obligation. Product descriptions, in particular any and all technical specifications, are only binding when explicitly agreed upon. For suggested retail prices, please refer to the separate price list.

Height Gauge
Page 220

Height Gauge Accessories
Page 227

Height Gauge with Data Processing Unit
Page 229

All products to be sold to commercial customers. Product illustrations are without obligation. Product descriptions, in particular any and all technical specifications, are only binding when explicitly agreed upon. For suggested retail prices, please refer to the separate price list.

Lightweight Vernier Height Gauge

Series 506

This vernier height gauge offers you the following benefits:
- You can take accurate and fast readings thanks to the satin chrome finished main and vernier scales.
- A carbide-tipped scriber is provided.

506-207

Fine adjustment

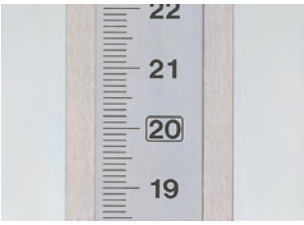

Large digit

Metric

No.	Range [mm]	Accuracy	Mass [kg]
506-207	0-200	±0,03 mm	1,4

Also available! Inch/Metric Models

mm

0 - 200mm

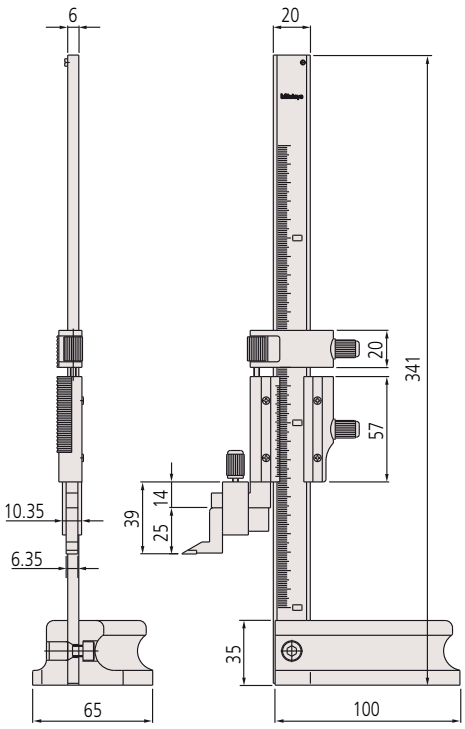

Specifications

Accuracy	Refer to the list of specifications.
Graduation	0,02 mm
Delivered	Including scriber and scriber clamp

Standard accessories

No.	Description
07GZA004	Scriber Clamp with Plastic Screw, for Height Gauge
900173	Carbide Tipped Scriber, 6,35x12,7mm, 47mm Length

Optional accessories

No.	Description
953639	Holding Bar for Swivel Clamp, 6,25x12,7mm, 50mm Length
900321	Swivel Clamp, for Ø4/8mm, Dovetail

953639

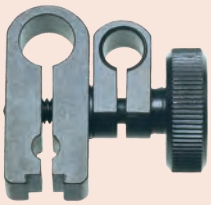

900321

All products to be sold to commercial customers. Product illustrations are without obligation. Product descriptions, in particular any and all technical specifications, are only binding when explicitly agreed upon. For suggested retail prices, please refer to the separate price list.

Vernier Height Gauge

Series 514

This vernier height gauge offers you the following benefits:
- You can take accurate and fast readings thanks to the satin chrome finished main and vernier scales.
- A carbide-tipped scriber is provided.

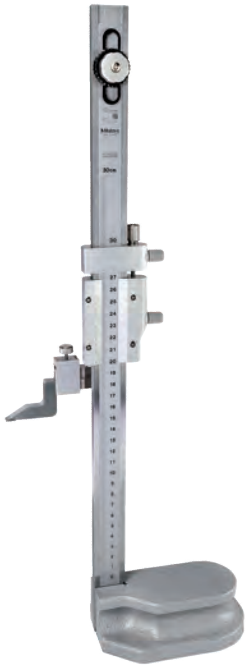

514-102

Specifications

Accuracy	Refer to the list of specifications.
Graduation	0,02 mm
Scale adjustment	15 mm for models up to 600 mm 25mm for models 1000 and 1500 mm
Delivered	Including scriber, scriber clamp and cover

Standard accessories

No.	Description
05GZA033	Scriber Clamp, 9x9mm
07GZA000	Carbide Tipped Scriber, 9x9mm, 80mm Length
905200	Carbide-tipped Scriber, 9x9mm, 150mm Length
905008	Scriber Clamp, for 16x10mm
900390	Carbide Tipped Scriber, 10x16mm, 144mm Length

07GZA033: for all except 514-170
07GZA000: 514-102, 514-104, 514-106
905200: 514-108, 514-109
905008: 514-170514-103, 514-105, 514-107
900390: 514-170

Optional accessories

No.	Description
953638	Holding Bar for Swivel Clamp, 9x9mm, 50mm Length
900209	Holding Bar for Swivel Clamp, 9x9mm, 100mm Length
900321	Swivel Clamp, for Ø4/8mm, Dovetail
07GZA003	Magnifier for Vernier Height Gauge, 300, 450, 600mm
07GZA015	Magnifier for Vernier Height Gauge, 1000mm

953638: except 514-170

953638

900321

Metric

No.	Range [mm]	Accuracy	Fine adjustment	L [mm]	a [mm]	b [mm]	c [mm]	d [mm]	e [mm]	Mass [kg]
514-102	0-300	±0,04 mm	4 mm	525	32	20	70	28	45	3,1
514-104	0-450	±0,05 mm	4 mm	675	32	20	70	28	45	3,4
514-106	0-600	±0,05 mm	7 mm	870	32	24	85	35	54	7,4
514-108	0-1000	±0,07 mm	6 mm	1340	42	30	110	45	65	20
514-170	0-1500	±0,18 mm	20 mm	1760	45	30	110,5	45	70	26

1500mm delivered with magnifier

Also available! Inch/Metric Models

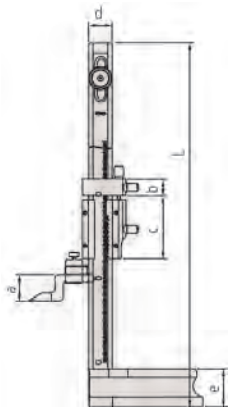

0-300 to 0-1000 mm

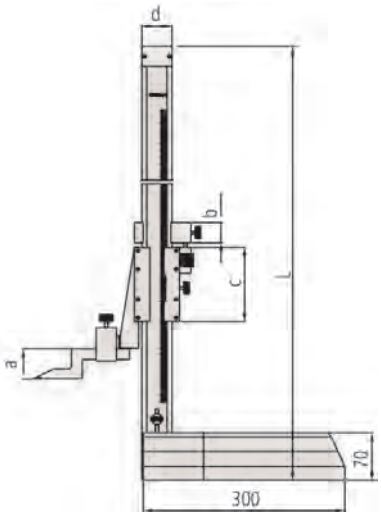

0-1500 mm

All products to be sold to commercial customers. Product illustrations are without obligation. Product descriptions, in particular any and all technical specifications, are only binding when explicitly agreed upon. For suggested retail prices, please refer to the separate price list.

Mitutoyo

Dial Height Gauge

Series 192

This dial height gauge offers you the following benefits:
- It allows you easy and error-free reading with both up and down digital counters as well as a dial.
- It comes with a hand wheel so you can easily make rough adjustments.
- A carbide-tipped scriber is provided.

192-130

192-132

192-133

Metric

No.	Range [mm]	Accuracy	Mass [kg]
192-130	0-300	±0,03 mm	4,2
192-131	0-450	±0,05 mm	9,2
192-132	0-600	±0,05 mm	9,8
192-133	0-1000	±0,07 mm	17

Also available! Inch Models

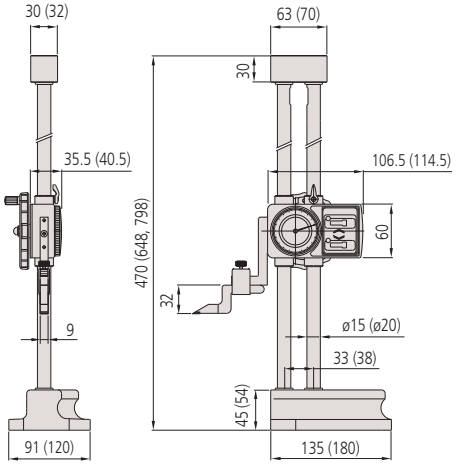

0 - 300 mm (0 - 450 mm, 0 - 600 mm)

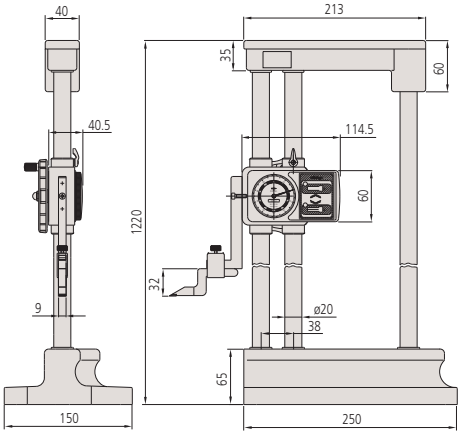

0 - 1000 mm

Specifications

Accuracy	Refer to the list of specifications
Graduation	0,01 mm
Delivered	Including scriber, scriber clamp and cover

Standard accessories

No.	Description
05GZA033	Scriber Clamp, 9x9mm
07GZA000	Carbide Tipped Scriber, 9x9mm, 80mm Length

Optional accessories

No.	Description
953638	Holding Bar for Swivel Clamp, 9x9mm, 50mm Length
900321	Swivel Clamp, for Ø4/8mm, Dovetail

953638

900321

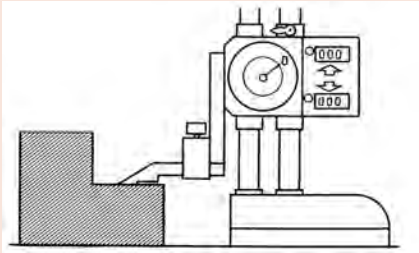

Reset

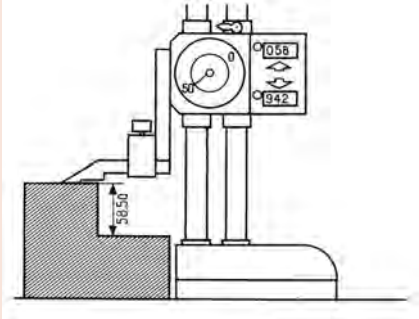

Reading off
Counter : 58,00 mm
Dial Gauge : 0,50 mm

Result : 58,50 mm

All products to be sold to commercial customers. Product illustrations are without obligation. Product descriptions, in particular any and all technical specifications, are only binding when explicitly agreed upon. For suggested retail prices, please refer to the separate price list.

ABSOLUTE Digimatic Height Gauge

Functions	Series 570
ORIGIN	●
ZERO/ABS	●
±SWITCHING	●
ON/OFF	●
DATA/HOLD	●
Low voltage alarm	●
Data output	●
PRESET	●

Specifications

Accuracy	Refer to the list of specifications. (excluding quantizing error)
Digital step	0,01 mm
Scale	ABSOLUTE electrostatic linear encoder
Max. response speed	Unlimited
Battery life	approx. 5000 hours
Display	LCD, 6-digit
Delivered	Including 1 battery, scriber and scriber clamp

Standard accessories

No.	Description
901338	Scriber Clamp, 6,35x12,7mm
900173	Carbide Tipped Scriber, 6,35x12,7mm, 47mm Length
05GZA033	Scriber Clamp, 9x9mm
905200	Carbide-tipped Scriber, 9x9mm, 150mm Length

901338, 900173: 570-227, 570-244
05GZA033, 905200: 570-230

Optional accessories

No.	Description
905338	Digimatic Cable, Flat Straight Type, 1m
905409	Digimatic Cable, Flat Straight Type, 2 m
02AZD790F	U-WAVE T Connection Cable F, Flat Straight Type
06ADV380F	USB Input Tool Direct (Digimatic USB) cable, 2m, Flat Straight Type
953639	Holding Bar for Swivel Clamp, 6,25x12,7mm, 50mm Length
953638	Holding Bar for Swivel Clamp, 9x9mm, 50mm Length
900209	Holding Bar for Swivel Clamp, 9x9mm, 100mm Length
900321	Swivel Clamp, for Ø4/8mm, Dovetail

953639: 570-227
953638, 900209: 570-230

Consumable spares

No.	Description
938882	Battery SR44 1.5V

953638

900321

Series 570

ABSOLUTE®

This Digimatic height gauge is very precise and reliable, and offers you the following benefits:

- Its built-in ABSOLUTE linear encoder means you don't have to set the reference point at every power-on, improving reliability as over-speed errors cannot occur.
- Fine-adjustment gives you precise positioning.
- It comes with large and smooth-acting slider hand wheel for coarse- and fine-adjustments (570-3xx only).
- A carbide-tipped scriber is provided.
- SPC data output.

570-227

Metric

No.	Range [mm]	Remarks	Accuracy	Mass [kg]
570-227	0-200	2 x PRESET	±0,03 mm	1,3
570-230	0-1000		±0,07 mm	16,8

Also available! Inch/Metric Models

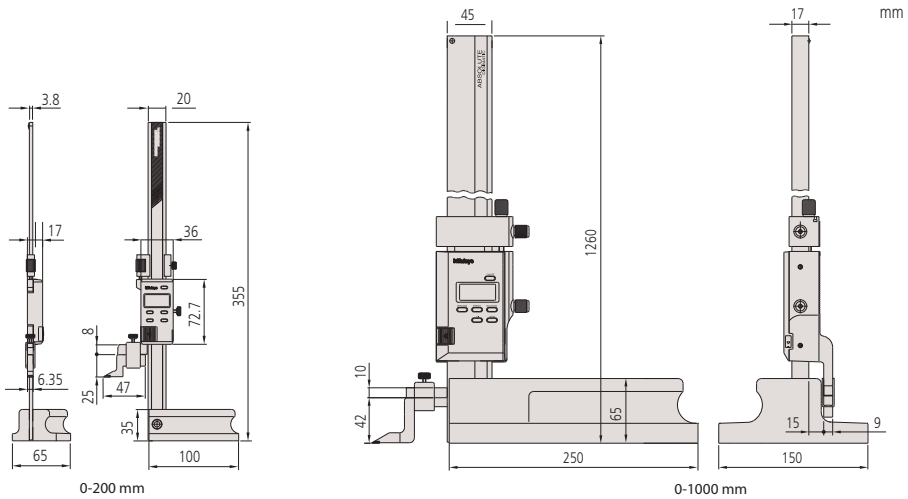

All products to be sold to commercial customers. Product illustrations are without obligation. Product descriptions, in particular any and all technical specifications, are only binding when explicitly agreed upon. For suggested retail prices, please refer to the separate price list.

Mitutoyo

ABSOLUTE Digimatic Height Gauge

Series 570

ABSOLUTE®

This Digimatic height gauge is very precise and reliable, and offers you the following benefits:

- Its built-in ABSOLUTE linear encoder means you don't have to set the reference point at every power-on, improving reliability as over-speed errors cannot occur.
- It comes with large and smooth-acting slider hand wheel
- A carbide-tipped scriber is provided.
- SPC data output.

570-302

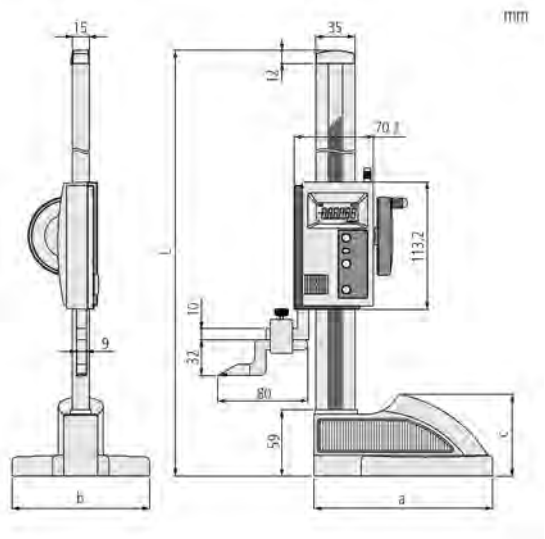

Metric

No.	Range [mm]	Accuracy	L [mm]	A [mm]	B [mm]	C [mm]	Mass [kg]
570-302	0-300	±0,03 mm	507	160	122	72,6	4,6
570-304	0-600	±0,05 mm	812	181	142	74,1	6,4

Also available! Inch/Metric Models

Large smooth slider handwheel

Fits the hand comfortably

Large clamp lever

Functions	Series 570
ORIGIN	●
ZERO/ABS	●
ON/OFF	●
DATA/HOLD	●
Low voltage alarm	●
Data output	●

Specifications

Accuracy	Refer to the list of the specifications. (excluding quantizing error)
Digital step	0,01 mm
Scale	ABSOLUTE electrostatic linear encoder
Max. response speed	Unlimited
Battery life	approx. 20000 hours
Display	LCD, Character Height 10 mm
Delivered	Including 1 battery, scriber and scriber clamp

Standard accessories

No.	Description
05GZA033	Scriber Clamp, 9x9mm
07GZA000	Carbide Tipped Scriber, 9x9mm, 80mm Length

Optional accessories

No.	Description
905338	Digimatic Cable, Flat Straight Type, 1m
905409	Digimatic Cable, Flat Straight Type, 2 m
02AZD790F	U-WAVE T Connection Cable F, Flat Straight Type
06ADV380F	USB Input Tool Direct (Digimatic USB) cable, 2m, Flat Straight Type
953638	Holding Bar for Swivel Clamp, 9x9mm, 50mm Length
900321	Swivel Clamp, for Ø4/8mm, Dovetail

Consumable spares

No.	Description
938882	Battery SR44 1.5V

953638

900321

All products to be sold to commercial customers. Product illustrations are without obligation. Product descriptions, in particular any and all technical specifications, are only binding when explicitly agreed upon. For suggested retail prices, please refer to the separate price list.

Digimatic Height Gauge Double Column Type

Functions	Series 192
ZERO/ABS	●
PRESET (2 values)	●
±SWITCHING	●
ON/OFF	●
DATA/HOLD	●
Low voltage alarm	●
Data output	●

Specifications

Accuracy	Refer to the list of specifications. (excluding quantizing error)
Digital step	0,01/0,005 mm
Max. response speed	500 mm/s
Battery life	approx. 3500 hours
Display	LCD, Character Height: 11 mm
Delivered	Including scriber, scriber holder, 1 battery and cover

Standard accessories

No.	Description
05GZA033	Scriber Clamp, 9x9mm
07GZA000	Carbide Tipped Scriber, 9x9mm, 80mm Length
450291	Vinyl Cover 192, 300mm
450292	Vinyl Cover Series 192, 600mm
450290	Vinyl Cover 192, 1000mm

Optional accessories

No.	Description
905338	Digimatic Cable, Flat Straight Type, 1m
905409	Digimatic Cable, Flat Straight Type, 2 m
02AZD790F	U-WAVE T Connection Cable F, Flat Straight Type
06ADV380F	USB Input Tool Direct (Digimatic USB) cable, 2m, Flat Straight Type
953638	Holding Bar for Swivel Clamp, 9x9mm, 50mm Length
900321	Swivel Clamp, for Ø4/8mm, Dovetail

953638

900321

Series 192

This is a high accuracy height gauge, and offers you the following benefits:
- Its double-column structure ensures high measuring accuracy.
- A carbide-tipped scriber is provided.
- Large character height of 11mm provides good readability.
- SPC data output.

192-613-10

Metric

No.	Range [mm]	Accuracy	Mass [kg]
192-613-10	0-300	±0,02 mm	4,7
192-614-10	0-600	±0,05 mm	8,3
192-615-10	0-1000	±0,07 mm	15,7

Also available! Inch/Metric Models

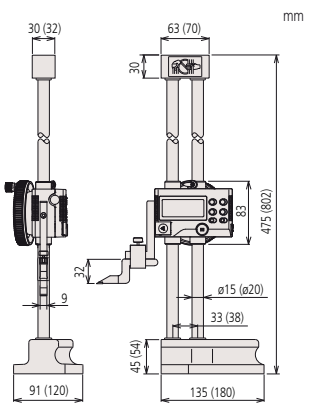

0-300 mm
(0-600 mm)

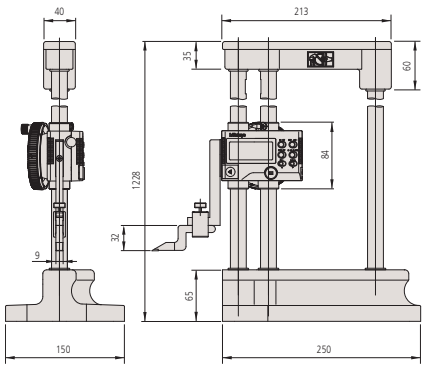

0-1000 mm

All products to be sold to commercial customers. Product illustrations are without obligation. Product descriptions, in particular any and all technical specifications, are only binding when explicitly agreed upon. For suggested retail prices, please refer to the separate price list.

Mitutoyo

Digimatic Height Gauge Double Column Type with Touch Trigger Probe Connector

Series 192

- Carbide-tipped long scriber is provided.
- Double-column structure ensures high measuring accuracy
- Bidirectional touch-trigger probe is an optional accessory. It can quickly and accurately measure steps as well as inside and outside dimensions.

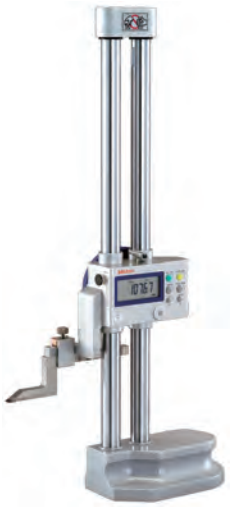

192-663-10

192-007

Metric

No.	Range [mm]	Accuracy	Mass [kg]
192-663-10	0-300	±0,02 mm	5,7
192-664-10	0-600	±0,04 mm	8,3
192-665-10	0-1000	±0,06 mm	15,7

Also available! Inch/Metric Models

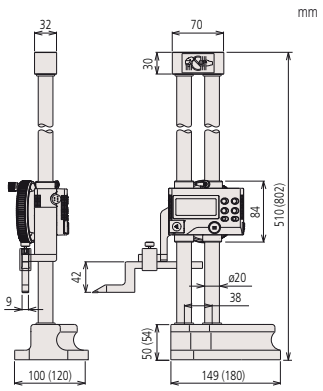

0-300 mm
(0-600 mm)

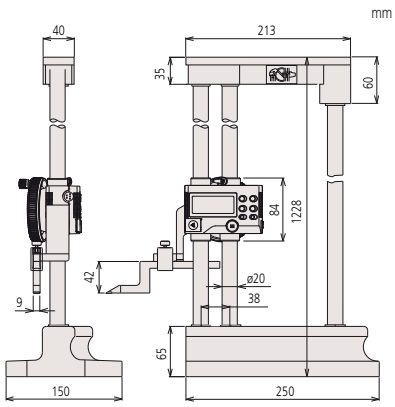

0-1000 mm

Functions	Series 192
ZERO/ABS	●
PRESET (2 values)	●
±SWITCHING	●
ON/OFF	●
DATA/HOLD	●
Stylus tip diameter compensation	●
Touch-trigger probe	●
Low voltage alarm	●
Data output	●

Specifications

Accuracy	Refer to the list of specifications. (excluding quantizing error)
Digital step	0,01/0,005 mm
Max. response speed	500 mm/s
Repeatability	0,01 mm
Battery life	approx. 3500 hours
Display	LCD, Character Height: 11 mm
Delivered	Including scriber, scriber holder, 1 battery and cover

Standard accessories

No.	Description
05GZA033	Scriber Clamp, 9x9mm
905200	Carbide-tipped Scriber, 9x9mm, 150mm Length
450291	Vinyl Cover 192, 300mm
450292	Vinyl Cover Series 192, 600mm
450290	Vinyl Cover 192, 1000mm

Optional accessories

No.	Description
905338	Digimatic Cable, Flat Straight Type, 1m
905409	Digimatic Cable, Flat Straight Type, 2 m
02AZD790F	U-WAVE T Connection Cable F, Flat Straight Type
06ADV380F	USB Input Tool Direct (Digimatic USB) cable, 2m, Flat Straight Type
192-007	Bi-Directional Touch Trigger Probe, for Series 192, Metric
953638	Holding Bar for Swivel Clamp, 9x9mm, 50mm Length
900209	Holding Bar for Swivel Clamp, 9x9mm, 100mm Length
900321	Swivel Clamp, for Ø4/8mm, Dovetail

Consumable spares

No.	Description
938882	Battery SR44 1.5V

All products to be sold to commercial customers. Product illustrations are without obligation. Product descriptions, in particular any and all technical specifications, are only binding when explicitly agreed upon. For suggested retail prices, please refer to the separate price list.

Spare Parts for Height Gauges

mm

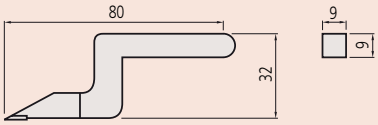

07GZA000

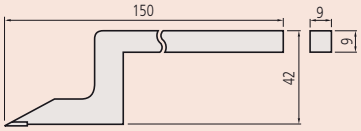

905200

mm

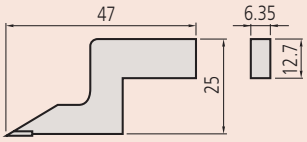

900173

mm

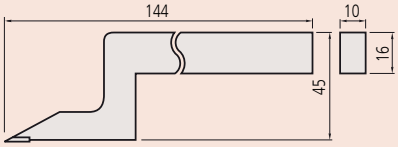

900390

mm

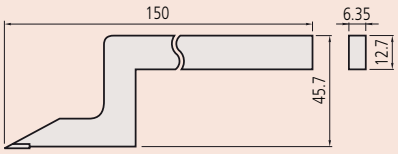

905201

Standard accessories for Height Gauges

These are optional accessories and spare parts for height gauges, that you can use for different tasks.

- Various accessories are available for using height gauges in different applications.
- Hard-wearing carbide-tipped scribers are available for all height gauges.

05GZA033

905008

Carbide-tipped scribers

No.	Applicable height gauges	Description
07GZA000	192-130, 192-131, 192-132, 192-133 192-613-10, 192-614-10, 192-615-10 514-102, 514-104, 514-106 570-302, 570-304	Carbide tipped scriber (9 x 9 mm) 80 mm length
905200	192-663-10, 192-664-10, 192-665-10 514-108 570-230	Carbide tipped scriber (9 x 9 mm) 150 mm length
900173	570-227 506-207	Carbide tipped scriber (12,7 x 6,35 mm) 47 mm length
900390	514-170	Carbide tipped scriber (16 x 10 mm) 144 mm length

Sciber clamps

No.	Applicable height gauges	Description
905008	514-170	Scriber clamp (16 x 10 mm)
05GZA033	192-130, 192-131, 192-132, 192-133 192-613-10, 192-614-10, 192-615-10 192-663-10, 192-664-10, 192-665-10 514-102, 514-104, 514-106, 514-108 570-230 570-302, 570-304	Scriber clamp (9 x 9 mm)
07GZA004	570-227, 570-244, 506-207	Scriber clamp with plastic screw (12,7 x 6,35 mm)

All products to be sold to commercial customers. Product illustrations are without obligation. Product descriptions, in particular any and all technical specifications, are only binding when explicitly agreed upon. For suggested retail prices, please refer to the separate price list.

Mitutoyo

Optional Accessories for Height Gauges

Optional accessories for Height Gauges

These are optional accessories and spare parts for height gauges, that you can use for different tasks.

- Various accessories are available for using height gauges in different applications.
- Hard-wearing carbide-tipped scribers are available for all height gauges.

Center master

No.	Remarks	Applicable height gauges
900581	Center master (12,7 x 6,35 mm)	570-227, 570-244 506-207 192-630-10, 192-631-10, 192-632-10, 192-633-10 570-248
951144	Center master (9 x 9 mm)	192-130, 192-131, 192-132, 192-133 192-613-10, 192-614-10, 192-632-10, 192-633-10 570-312, 570-313, 570-314 192-670-10, 192-671-10, 192-672-10, 192-673-10 514-108, 514-109

Depth measurement attachment

No.	Remarks	Applicable height gauges
900764	Depth measurement attachment (9 x 9 mm)	192-130, 192-131, 192-132, 192-133 192-613-10, 192-614-10, 192-615-10 514-102, 514-103, 514-104, 514-105, 514-106, 514-107 570-302, 570-304 192-663-10, 192-664-10, 192-665-10 514-108, 514-109
900878	Depth measurement attachment (12,7 mm x 6,35 mm)	570-227, 570-244 506-207 192-630-10, 192-631-10, 192-632-10, 192-633-10 570-248

Electrical contact sensor

No.	Applicable height gauges
900872	For all height gauges on a granite surface plate. For electroconductive parts with a sufficient contact surface.

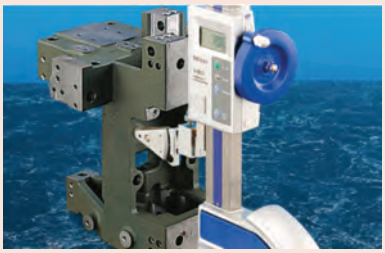

Center master

Depth Gage Attachment

Electrical contact sensor
900872

All products to be sold to commercial customers. Product illustrations are without obligation. Product descriptions, in particular any and all technical specifications, are only binding when explicitly agreed upon. For suggested retail prices, please refer to the separate price list.

QM-Height

Series 518

ABSOLUTE®

This is a high precision ABSOLUTE digital height gauge that offers you the following benefits:

- It has a high accuracy, high resolution ABSOLUTE linear encoder for position detection.
- Types with and without pneumatic drive mechanism
- Automatic running of prelearnt part programs
- You can easily implement frequently used measurements, such as inside/outside diameter and pitch calculations, by icon-based commands that also support easy one-key operation.
- Extraordinary battery life
- GO/±NG judgement is performed by setting the upper and lower tolerances.
- Display is mounted fixed to the housing for more comfortable usage. Probe moves independently during measurements.

Specifications

Accuracy	±(2,4+2,1L/600) µm L = Measuring length (mm)
Digital step	0,001mm/0,005mm;
Repeatability (±2σ)	1,8 µm
Scale	ABSOLUTE electromagnetic inductive
Measuring force	1,5 ± 0,5 N
Drive method	Manual
Guiding method	Roller bearing
Power supply	alkaline battery size AA LR6 (4pcs.), rechargeable battery size AA Ni-MH (4pcs.), AC-Adapter (optional)
Battery life	Approx. 300h (without air floating) Approx. 80h (with air floating)
Measuring function	1D measurement: height diameter, pitch, Max/Min/TIR (Max-Min), tolerance, preset, data memory
Display	TN monochrome LCD

Standard accessories

No.	Description
011037	Battery LR6 (AA) 4x
12AAA715	Setting Block Linear Height/QM-Height, Probe Calibration
05HZA148	Ball Offset Probe QM-Height, Ø5mm, Standard Accessory

Optional accessories

No.	Description
936937	Digimatic Cable, Flat 10-Pin Type, 1 m
965014	Digimatic Cable, Flat 10-Pin Type, 2 m
02AZD790D	U-WAVE T Connection Cable D, Flat 10-Pin Type
06ADV380D	USB Input Tool Direct (Digimatic USB) cable, Flat 10-Pin Type, 2 m
02AZE990	U-WAVE-T Mounting Plate
06AEG180D	AC-Adapter, 6V 2A, CEE Type

05HZA148

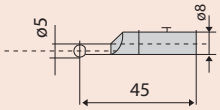

05HZA148

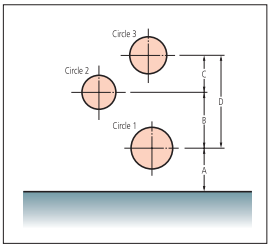

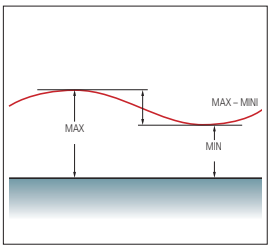

No.	Range	Perpendicularity	Air floating	Mass [kg]
518-230	0-350/0-465*	7µm	no	25
518-232	0-600/0-715*	12µm	no	26
518-234	0-350/0-465*	7µm	yes	29
518-236	0-600/0-715*	12µm	yes	30

*Range with probe turned to upward position

Also available! Inch/Metric Models

Linear QM-Height brochure on request

Scan QR Code with your mobile device and watch our product videos on YouTube

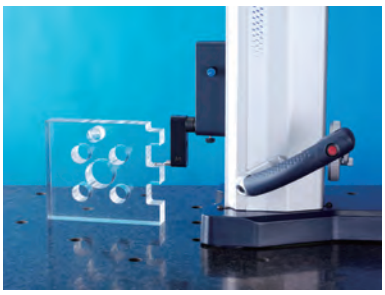

Application example of QM-Height with air floating

02AZE990 for U-WAVE (wireless system)

All products to be sold to commercial customers. Product illustrations are without obligation. Product descriptions, in particular any and all technical specifications, are only binding when explicitly agreed upon. For suggested retail prices, please refer to the separate price list.

Mitutoyo

Optional Accessories for QM-Height

Series 518

QM-Height

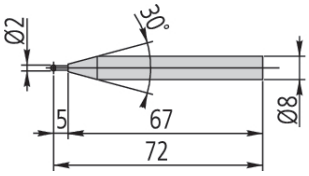

12AAF667

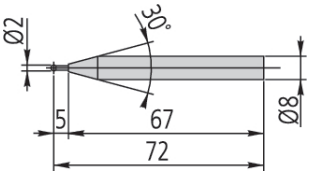

957261

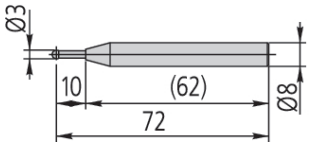

957262

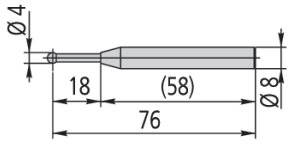

957263

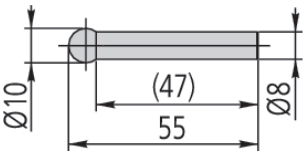

12AAB552

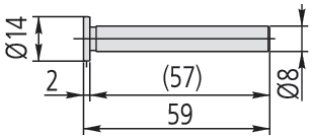

957264

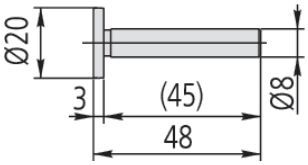

957265

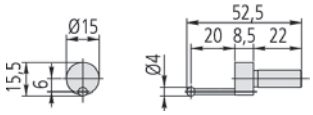

12AAA788

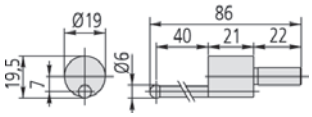

12AAA789

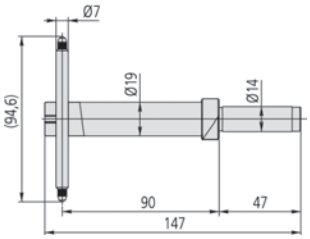

12AAC072

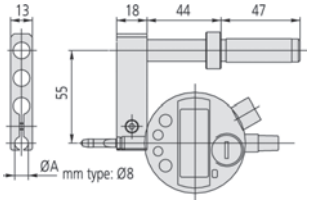

12AAA792
(with optional indicator)

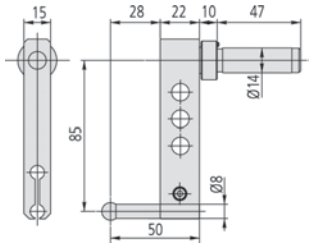

12AAA793
(with optional measuring insert)

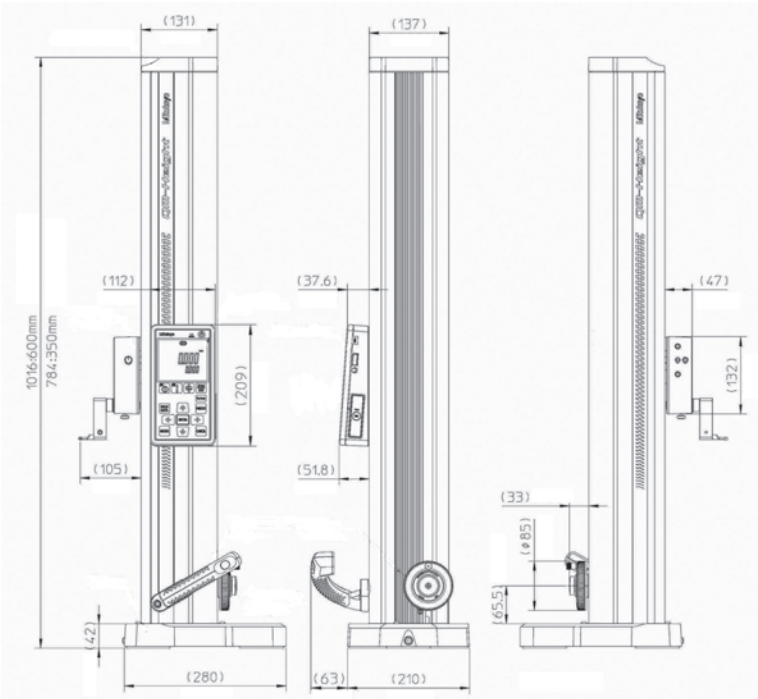

Optional accessories

No.	Description
12AAF667	Ball Probe Coaxial Type, Ø2mm,Ruby, 72mm Length
957261	Ball Probe Coaxial Type, Ø2mm, 72mm Length
957262	Ball Probe Coaxial Type, Ø3mm, 72mm Length
957263	Ball Probe Coaxial Type, Ø4mm, 76mm Length
12AAB552	Ball Probe, Coaxial Type, Ø10mm, 50mm Length
957264	Disk Probe Coaxial Type, Ø14mm, 59mm Length
957265	Disk Probe Coaxial Type, Ø20mm, 48mm Length
12AAA788	Ball Probe Eccentric Type Ø4mm
12AAA789	Ball Probe Eccentric Type Ø6mm
12AAC072	Depth Probe
12AAA792	Indicator Holder LH-600, QM-Height, for 8mm Stem
12AAA793	Probe Extension Holder LH-600, QM-Height, 85mm
226116	Collar #6mm

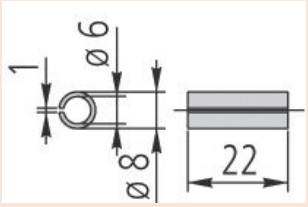

226116

Tolerance judgement GO

Tolerance judgement NG

All products to be sold to commercial customers. Product illustrations are without obligation. Product descriptions, in particular any and all technical specifications, are only binding when explicitly agreed upon. For suggested retail prices, please refer to the separate price list.

Linear Height LH-600E/EG

Series 518

This is a high performance 2D measurement system.
The Linear Height Gauge LH-600E/EG offers you a huge range of features, including:

- Excellent accuracy.
- Pneumatic drive mechanism.
- Self-explanatory control pad with menu control in display.
- Easy-to-read LCD display.
- Automatic running of pre-learnt part programs.
- GO/± NG display at each measurement.
- Mains-independent operation with rechargeable battery.
- Easy handling with low weight.
- RS-232C data output port.
- USB Data output (for storing data only).
- DIGIMATIC data input for when using a digital indicator (e.g. when testing perpendicularity).
- Statistic processing.

Specifications

Accuracy	(1,1 + 0,6L/600) µm L = length (mm)
Digital step	0,0001/0,001/0,01/0,1 mm
Slider stroke	600 mm
Measuring force	1 N
Perpendicularity	5 µm (after compensation)
Straightness	4 µm (mechanical)
Language for display	English/German/French/Spanish/ Italian/Dutch//Portuguese/ Swedish/Turkish/Czech/ Hungarian/Slovenian/Polish/ Traditional Chinese (optional)/ Japanese
Drive method	Manual/motor (5-40 mm/s, 7 steps)
Suspension method	Full/semi-floating with built-in air compressor
Balancing method	Counter balance
Number of stored programs	50 programs (max.)
Number of stored data	60000 (max.)
Battery operation time	approx. 5 hours
Probes	See specific chapter on Probes
Display	Graphic LCD 320x240 dots (with back light)

Standard accessories

No.	Description
12AAA715	Setting Block Linear Height/QM-Height, Probe Calibration
12AAF634	Eccentric Probe LH-600, Standard Accessory, Ø5mm
12AAF712	Battery Pack, LH-600, Standard Accessory
223587	Dust Cover LH-600
357651	AC adapter 12V, for SJ-210/SJ-310/ LH-600

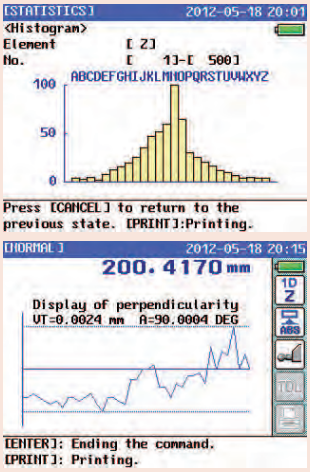

Linear Height LH-600 brochure on request

Scan QR Code with your mobile device and watch our product videos on YouTube

518-351D-21 518-352D-21

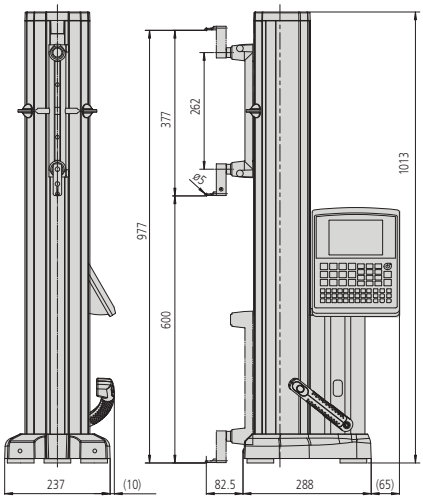

No.	Range [mm]	Remarks	Mass [kg]
518-351D-21	0-972		24
518-352D-21	0-972	Power grip pre-installed	24

All products to be sold to commercial customers. Product illustrations are without obligation. Product descriptions, in particular any and all technical specifications, are only binding when explicitly agreed upon. For suggested retail prices, please refer to the separate price list.

Optional Accessories for Linear Height

Series 518

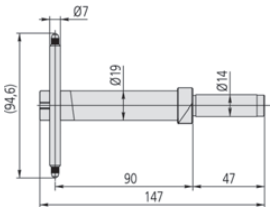

12AAC072

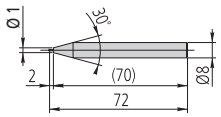

12AAF666

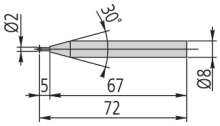

957261

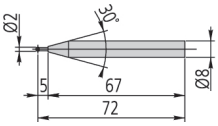

12AAF667

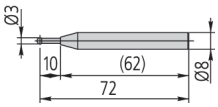

957262

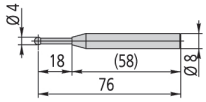

957263

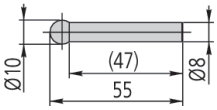

12AAB552

12AAF668

12AAF669

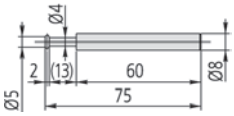

12AAF670

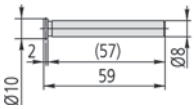

12AA671

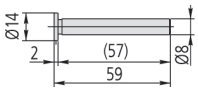

957264

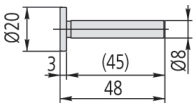

957265

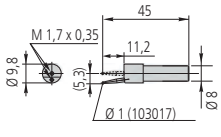

12AAF672

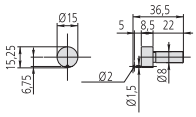

12AAF673

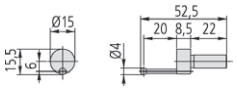

12AAA788

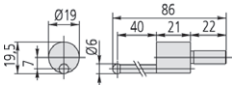

12AAA789

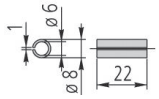

226116

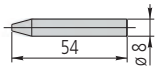

226117

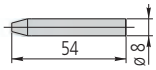

226118

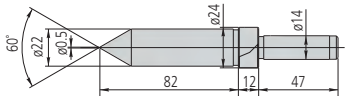

12AAC073

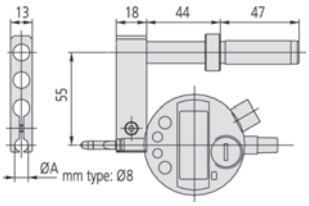

12AAA792
(with optional indicator)

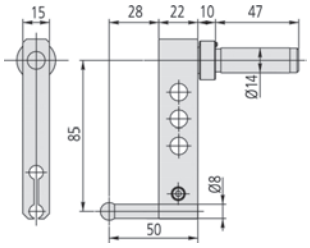

12AAA793
(with optional measuring insert)

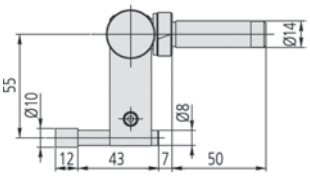

12AAB136

K650986

12AAN050

Optional accessories

No.	Description
1. Probe diameter calibration block	
12AAA787	Setting Block Linear Height/QM-Height, Probe Calibration, Taper Probe also
2. Depth measurement	
12AAC072	Depth Probe
3. Interchangeable measuring insert (or stylus) for eccentric probe (standard accessory)	
12AAF666	Ball Probe Coaxial Type, Ø1mm, 72mm Length
957261	Ball Probe Coaxial Type, Ø2mm, 72mm Length
12AAF667	Ball Probe Coaxial Type, Ø2mm,Ruby, 72mm Length
957262	Ball Probe Coaxial Type, Ø3mm, 72mm Length
957263	Ball Probe Coaxial Type, Ø4mm, 76mm Length
12AAB552	Ball Probe, Coaxial Type, Ø10mm, 50mm Length
12AAF668	Ball Probe Coaxial Type, Ø10mm, 82mm Length
12AAF669	Ball Probe Coaxial Type, Ø10mm, 120mm Length
12AAF670	Disk Probe Coaxial Type, Ø5mm, 75mm Length
12AAF671	Disk Probe Coaxial Type, Ø10mm, 59mm Length
957264	Disk Probe Coaxial Type, Ø14mm, 59mm Length
957265	Disk Probe Coaxial Type, Ø20mm, 48mm Length
12AAF672	Ball Probe Eccentric Type Ø1mm
12AAF673	Ball Probe Eccentric Type Ø2mm
12AAA788	Ball Probe Eccentric Type Ø4mm
12AAA789	Ball Probe Eccentric Type Ø6mm
226116	Collar #6mm
226117	CMM Stylus Adapter M2
226118	CMM Stylus Adapter M3
4. Special holder, special probe	
12AAC073	Tapered Measuring Insert, Ø22mm
12AAA792	Indicator Holder LH-600, QM-Height, for 8mm Stem
12AAA793	Probe Extension Holder LH-600, QM-Height, 85mm
12AAB136	Cylindrical Probe, Ø10mm
5. Others	
12AAF674	Auxiliary Weight, LH-600, 1 pcs.
K650986	Stylus Kit M3 "Linear Height"
6. Printer and interface	
12AAN052	Printer Paper for 12AAN050, 10 pcs.
12AAA804	Printer Cable 2m, for Page Printer
12AAA807D	Cable RS-232C 2m
12AAN050	Receipt Printer for LH-600E/EG, CEE Type
7. Battery	
12AAF712	Battery Pack, LH-600, Standard Accessory

Recommended model for A4 printer: EPSON LQ-590
K650986: holder M3/disk probe Ø 12 mm/
ruby ball probe Ø 1, 2, 3, 4 mm/extension 10, 20 mm

All products to be sold to commercial customers. Product illustrations are without obligation. Product descriptions, in particular any and all technical specifications, are only binding when explicitly agreed upon. For suggested retail prices, please refer to the separate price list.

ABSOLUTE Digimatic Indicator
Page 234

Dial Indicator
Page 248

Accessories for Indicator
Page 266

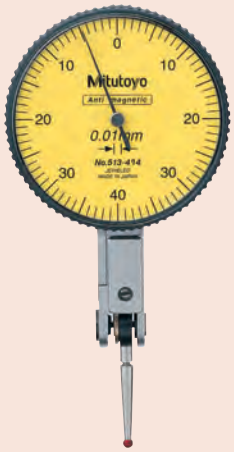

Dial Test Indicator
Page 275

Accessories for Dial Test Indicators
Page 286

Thickness Gauge, Caliper Gauge and Coating Thickness Gauge
Page 288

All products to be sold to commercial customers. Product illustrations are without obligation. Product descriptions, in particular any and all technical specifications, are only binding when explicitly agreed upon. For suggested retail prices, please refer to the separate price list.

ABSOLUTE Digimatic Solar Indicator ID-SS

Series 543

This solar-powered, standard model is environmentally friendly and very easy to use.
The ABSOLUTE Digimatic Solar Indicator ID-SS offers you the following benefits:

- The ABSOLUTE sensor means you don't have to carry out origin setting every time you power it on, saving you time and hassle.
- There's no battery to change.
- The solar cell is operates from just 40 Lux.
- Super-capacitor charge storage enables you to work in low-level lighting conditions of less than 40 Lux.
- You can access all functions by using the large, user-friendly buttons on the front of the indicator.
- Large character height of 9mm provides good readability.

543-500B

543-505B

Functions	Series 543
ORIGIN (ABS-Zero)	●
Digimatic data output	●
Counting direction switchable	●

Specifications

Accuracy	Refer to the list of specifications (excluding quantizing error)
Scale	Capacitance type, absolute linear encoder
Max. response speed	Unlimited
Stem Ø	8 mm
Contact point	Carbide ball, thread M 2,5 x 0,45 mm
Alarm	Counting value composition error
Power supply	Solar cell usable from 40 Lux illumination
Display	LCD character height 9 mm

Optional accessories

No.	Description
21EZA198	Spindle Lifting Lever, for 12,7mm Range
540774	Spindle Lifting Cable, 500mm
21EZA105	Spindle Lifting Knob, for 12,5mm, Metric
Digimatic Signal Cables	
905338	Digimatic Cable, Flat Straight Type, 1m
905409	Digimatic Cable, Flat Straight Type, 2 m
02AZD790F	U-WAVE T Connection Cable F, Flat Straight Type
06ADV380F	USB Input Tool Direct (Digimatic USB) cable, 2m, Flat Straight Type

For USB Input Tool Direct cable:
a footswitch (no. 937179T), a USB- footswitch adapter (no. 06ADV384) and USB-ITPAK Software (no. 06AEN846) are required.

Consumable spares

No.	Description
901312	Contact Element Ball Point, 7,3mm Length, Carbide, Metric

Metric

No.	No. Lug back plate	Range [mm]	Digital step	Accuracy	Measuring force [N]	Mass lug/plain [g]
543-500B	543-500	12,7	0,001 mm	0,003 mm	≤ 1,5	150/140
543-505B	543-505	12,7	0,01 mm	0,02 mm	≤ 1,5	150/140

No. with "B": Flat back plate

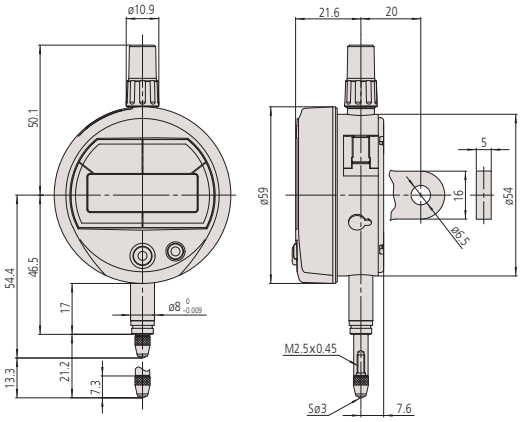

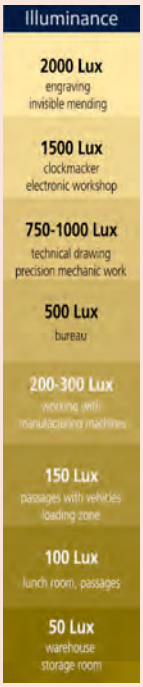

All products to be sold to commercial customers. Product illustrations are without obligation. Product descriptions, in particular any and all technical specifications, are only binding when explicitly agreed upon. For suggested retail prices, please refer to the separate price list.

ABSOLUTE Digimatic Indicator ID-S

Functions	Series 543
ORIGIN (ABS-Zero)	●
Digimatic data output	●
ON/OFF	●
Counting direction switchable	●

Specifications

Accuracy	Refer to the list of specifications (excluding quantizing error)
Scale	Capacitance type, ABSOLUTE linear encoder
Max. response speed	Unlimited
Stem Ø	8 mm
Contact point	Carbide ball, thread M 2,5 x 0,45 mm
Alarm	Low voltage, counting value composition error
Power supply	1 battery SR-44
Battery life	approx. 18000 hours (0,001 mm type) approx. 20000 hours (0,01 mm type)
Display	LCD, character height 9 mm

Optional accessories

No.	Description
21EZA198	Spindle Lifting Lever, for 12,7mm Range
540774	Spindle Lifting Cable, 500mm
21EZA105	Spindle Lifting Knob, for 12,5mm, Metric
238774	Silicon rubber boot for ID-C, ID-N, ID-S
Digimatic Signal Cables	
905338	Digimatic Cable, Flat Straight Type, 1m
905409	Digimatic Cable, Flat Straight Type, 2 m
02AZD790F	U-WAVE T Connection Cable F, Flat Straight Type
06ADV380F	USB Input Tool Direct (Digimatic USB) cable, 2m, Flat Straight Type

For USB Input Tool Direct cable:
a footswitch (no. 937179T), a USB- footswitch adapter (no. 06ADV384) and USB-ITPAK Software (no. 06ADV386) are required.
238774 only for 543-794B

Consumable spares

No.	Description
901312	Contact Element Ball Point, 7,3mm Length, Carbide, Metric
938882	Battery SR44 1.5V
02ACA376	NBR Rubber Boot, for ID-C, ID-N, ID-S

02ACA376 only for 543-794B

21EZA198

540774

21EZA105

Series 543

This is a standard model of indicator that is reliable and easy to use.
The ABSOLUTE Digimatic Indicator ID-S offers you the following benefits:

- The ABSOLUTE sensor means you don't have to carry out origin setting every time you power it on, saving you time and hassle.
- You can access all functions by using the large, user-friendly buttons on the front of the indicator.
- Large character height of 9mm provides good readability.
- Exceptional battery life.

543-781B

543-790B

543-794B

Metric

No.	No. Lug back plate	Range [mm]	Digital step	Remarks	Accuracy	Measuring force [N]	Mass Lug/flat [g]
543-781B	543-781	12,7	0,01 mm	IP42	0,02 mm	≤ 1,5	140/150
543-790B	543-790	12,7	0,001 mm	IP42	0,003 mm	≤ 1,5	140/150
543-794B	543-794	12,7	0,001 mm	IP53	0,003 mm	≤ 2,5	140/150

No. with "B": Flat back plate

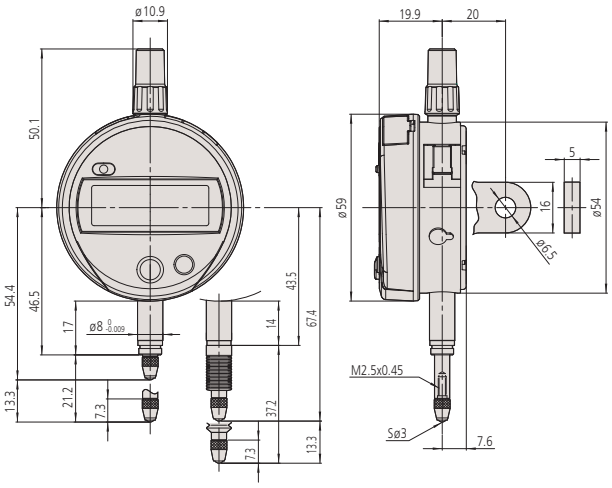

ABSOLUTE Digimatic Indicator ID-U

Series 575

This is a slim type of digital indicator with a 25mm range.
The ABSOLUTE Digimatic Indicator ID-U offers you the following benefits:

- The ABSOLUTE sensor means you don't have to carry out origin setting every time you power it on, saving you time and hassle.
- Its compact design makes it ideal for installing into measuring fixtures.
- Exceptional battery life.

575-121

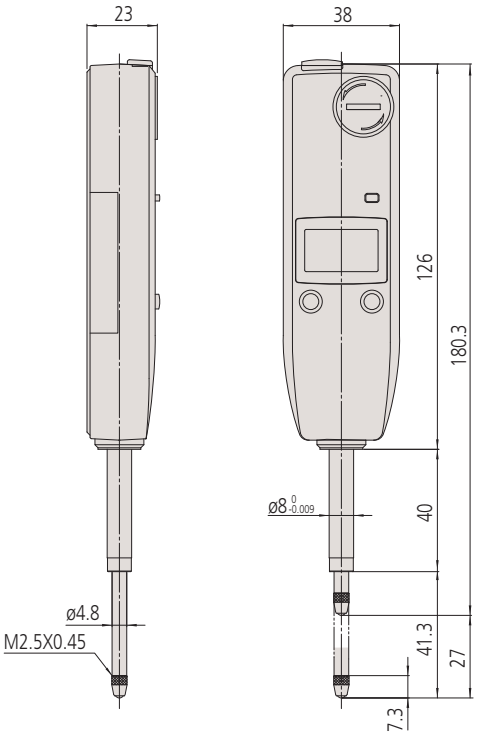

Metric

No.	Range [mm]	Accuracy	Measuring force [N]	Mass [g]
575-121	25,4	0,02 mm	≤ 1,8	140

Also available! Inch/Metric Models

Functions	Series 575
ORIGIN (ABS-Zero)	●
Digimatic data output	●
ON/OFF	●
Counting direction switchable	●

Specifications

Accuracy	Refer to the list of specifications (excluding quantizing error)
Digital step	0,01 mm
Scale	Capacitance type, ABSOLUTE linear encoder
Stem Ø	8 mm
Max. response speed	Unlimited
Contact point	Carbide ball, thread M 2,5 x 0,45 mm
Alarm	Low voltage, counting value composition error
Power supply	1 battery SR-44
Battery life	approx. 20000 hours
Display	LCD, character height 8,5 mm

Standard accessories

No.	Description
137693	Spindle Lifting Handle

Optional accessories

No.	Description
540774	Spindle Lifting Cable, 500mm
Digimatic Signal Cables	
905338	Digimatic Cable, Flat Straight Type, 1m
905409	Digimatic Cable, Flat Straight Type, 2 m
02AZD790F	U-WAVE T Connection Cable F, Flat Straight Type
06ADV380F	USB Input Tool Direct (Digimatic USB) cable, 2m, Flat Straight Type

540774:moving measuring range max. 12mm
For USB Input Tool Direct cable:
a footswitch (no. 937179T), a USB- footswitch adapter (no. 06ADV384) and USB-ITPAK Software (no. 06ADV386) are required.

Consumable spares

No.	Description
938882	Battery SR44 1.5V
901312	Contact Element Ball Point, 7,3mm Length, Carbide, Metric

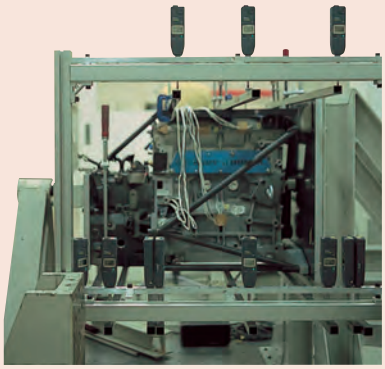

All products to be sold to commercial customers. Product illustrations are without obligation. Product descriptions, in particular any and all technical specifications, are only binding when explicitly agreed upon. For suggested retail prices, please refer to the separate price list.

ABSOLUTE Digimatic Indicator ID-C

Series 543

This is a multifunction indicator that is reliable and easy to use.
The ABSOLUTE Digimatic Indicator ID-C offers you the following benefits:

- The ABSOLUTE sensor means you don't have to carry out origin setting every time you power it on, saving you time and hassle.
- GO/±NG judgement is performed by setting the upper and lower tolerances.
- You can make simple calculations by a user-definable factor using the formula Ax (‚x' is spindle displacement).
- Large character height of 11mm provides good readability.
- Display 330° rotatable.
- A function lock protects the display against unauthorised use.

Calculation : f(x) = Ax
Mounting the ID-C on a measuring fixture and setting the multiplying factor "A" (between 0,0001 and 99,9999) allows direct measurement without using a conversion table and improves measurement efficiency

330° rotary display
The display can be rotated 330°, allowing use at a position where you can easily read the measurement value

Function locking
Ensures reliability of measurement by locking the settings to prevent preset function settings from being changed by mistake

Large LCD
The large LCD incorporates 11 mm characters making measurement values much easier to read

Tolerance function
2 kinds of tolerance visualisation

12,7 mm range model

25,4 mm range model

50,8 mm range model

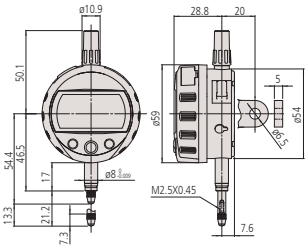

12,7 mm range models

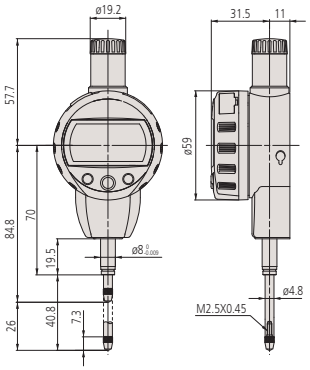

25,4 mm range models

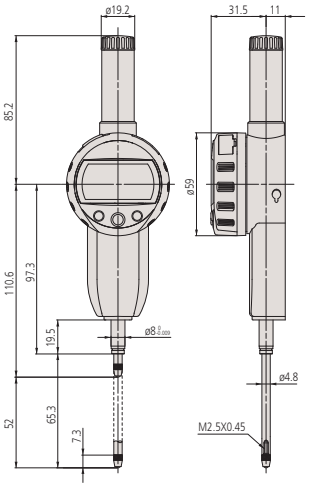

50,8 mm range models

All products to be sold to commercial customers. Product illustrations are without obligation. Product descriptions, in particular any and all technical specifications, are only binding when explicitly agreed upon. For suggested retail prices, please refer to the separate price list.

ABSOLUTE Digimatic Indicator ID-C

Series 543

Metric

No.	No. Lug back plate	Range [mm]	Digital step	Remarks	Accuracy	Measuring force [N]	Mass [g]
543-390B	543-390	12,7	0,001/0,01 mm		0,003 mm	≤ 1,5	170
543-394B	543-394	12,7	0,001/0,01 mm	Low force	0,003 mm	≤ 0,4-0,7	170
543-400B	543-400	12,7	0,01 mm		0,02 mm	≤ 0,9	170
543-404B	543-404	12,7	0,01 mm	Low force	0,02 mm	≤ 0,2-0,5	170
543-470B		25,4	0,001/0,01 mm		0,003 mm	≤ 1,8	190
543-474B		25,4	0,01 mm		0,02 mm	≤ 1,8	190
543-490B		50,8	0,001/0,01 mm		0,005 mm	≤ 2,3	260
543-494B		50,8	0,01 mm		0,04 mm	≤ 2,3	260

No. with "B": Flat back plate
Specification low measuring force models : see below

Spindle lifting handle

Spindle lifting lever

Spindle lifting lever

Spindle lift knop

Spindle lifting cable 500 mm

Spindle lifting cable 300 mm

Setting measuring force on low measuring force models

•543-404/404B

Spindle orientation	Spring	Weight (approximately 0.1N)	Maximum measuring force
Pointing vertically downward	Yes	Yes	0.5N
	Yes	No	0.4N
	No	Yes	0.3N
	No	No	0.2N
Horizontal	Yes	No	0.2N

•543-394/394B

Spindle orientation	Spring	Weight (approximately 0.1N)	Maximum measuring force
Pointing vertically downward	Yes	Yes	0.7N
	Yes	No	0.6N
	No	Yes	0.4N
	No	No	Not defined
Horizontal	Not defined		

Functions	Series 543
ZERO/ABS	●
GO/±NG judgement	●
Digimatic data output	●
ON/OFF	●
DATA/HOLD	●
Lock function	●
PRESET	●
Counting direction switchable	●
Calculation function	●
Selectable resolution*	●

Specifications

Accuracy	Refer to the list of specifications (excluding quantizing error)
Scale	Capacitance type, ABSOLUTE linear encoder
Max. response speed	Unlimited
Stem Ø	8 mm
Contact point	Carbide ball, thread M 2,5 x 0,45 mm
Alarm	Low voltage, counting value composition error, overflow error, tolerance limit setting error
Power supply	1 battery SR-44
Battery life	approx. 7000 hours
Display	LCD character height 11 mm Rotatable 330°

Optional accessories

No.	Description
540774	Spindle Lifting Cable, 500mm
901975	Spindle Lifting Cable Auto-Stop, 300mm
21EZA198	Spindle Lifting Lever, for 12,7mm Range
21EZA105	Spindle Lifting Knob, for 12,5mm, Metric
21EZA197	Spindle Lifting Knob, for 25,4mm Range
21EZA200	Spindle Lifting Knob, for 50,8mm Range
137693	Spindle Lifting Handle
02ACA571	Auxiliary Spindle Spring, for 25,4mm Range
02ACA773	Auxiliary Spindle Spring, for 50mm Range
Digimatic Signal Cables	
905338	Digimatic Cable, Flat Straight Type, 1m
905409	Digimatic Cable, Flat Straight Type, 2 m
02AZD790F	U-WAVE T Connection Cable F, Flat Straight Type
06ADV380F	USB Input Tool Direct (Digimatic USB) cable, 2m, Flat Straight Type

02ACA571/02ACA773 : required when orienting the indicator upside down
21EZA105 : not available for low measuring force models
540774 : moving measuring range max. 28 mm

Consumable spares

No.	Description
938882	Battery SR44 1.5V
901312	Contact Element Ball Point, 7,3mm Length, Carbide, Metric

*0,001 mm type

All products to be sold to commercial customers. Product illustrations are without obligation. Product descriptions, in particular any and all technical specifications, are only binding when explicitly agreed upon. For suggested retail prices, please refer to the separate price list.

ABSOLUTE Digimatic Indicator Max/Min/RANGE ID-C

Functions	Series 543
PRESET (x3)	●
ZERO/ABS	●
GO/±NG judgement	●
Digimatic data output	●
ON/OFF	●
Analogue measuring range switchable	●
MAX/MIN/RANGE	●
Lock function	●
Fast measurement mode	●
Counting direction switchable	●
Calculation function	●

Series 543

This indicator is the MAX/MIN/RANGE value holding function model
It offers the following benefits:

- The MAX/MIN/RANGE (run-out value) can be measured
- A fast measurement frequency mode(detection cycle 20ms or 50times/s) is selectable to measure in the peak detection mode (MAX/MIN/RANGE) more reliably
- Coefficient A is freely definable and x = displacement of the plunger
- Easy indicator setup via a setup menu
- Analogue bar graph in the display (12 different scales switchable)
- GO/±NG tolerance judgement function
- This indicator enables the use of a calculation function for the measured value Ax
- Coefficient A is freely definable and x = displacement of the plunger
- Easy indicator setup via setup menu
- A USB interface box can be used to set up the indicator from PC via dedicated software

Specifications

Accuracy	Refer to the list of specifications (excluding quantizing error)
Measuring force	≤ 1,5 N
Scale	Capacitance ABSOLUTE linear encoder
Max. response speed	Unlimited
Stem Ø	8 mm
Measurement frequency	Standard mode: 10 times/s "Fast" mode: 50 times/s*
Contact point	Carbide ball, thread M 2,5 x 0,45 mm
Alarm	Low voltage, ABS composition error, overflow error, tolerance limit setting error
Power supply	1 battery CR2032
Battery life	Standard mode: approx. 1 year "Fast" mode: approx. 4,5 month
Display	LCD, character height: 8 mm Rotatable 330°

543-300B

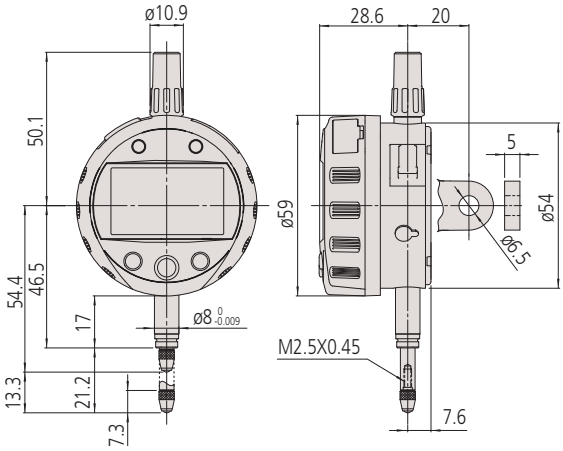

Optional accessories

No.	Description
905338	Digimatic Cable, Flat Straight Type, 1m
905409	Digimatic Cable, Flat Straight Type, 2 m
02AZD790F	U-WAVE T Connection Cable F, Flat Straight Type
06ADV380F	USB Input Tool Direct (Digimatic USB) cable, 2m, Flat Straight Type
21EZA313	USB Interface for PC Setup, ID-C Indicator
540774	Spindle Lifting Cable, 500mm
21EZA198	Spindle Lifting Lever, for 12,7mm Range

Consumable spares

No.	Description
05SAA217D	Lithium battery CR-2032, 1 pcs.
901312	Contact Element Ball Point, 7,3mm Length, Carbide, Metric

Metric

No.	No. Lug back plate	Range [mm]	Digital step	Accuracy	Mass [g]
543-300B	543-300	12,7	0,001/0,01 mm	0,003 mm	170

Also available! Metric/Inch Models

Also available! Inch/Metric Models

Scan QR Code with your mobile device and watch our product videos on YouTube

*if the plunger spped is > 50 µm/s the peak value may no be displayed correctly

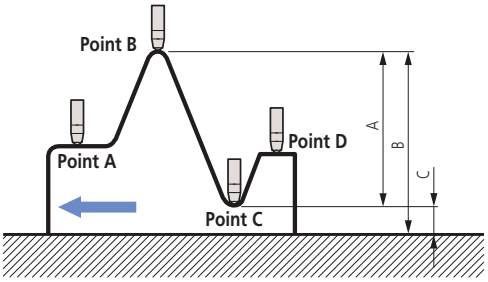

543-300B
7001-10

Difference/Runout measurement
Example : Indicator travel from points A to D :
Difference (or Total Runout) is displayed as A.
Dimensions B (maximum value) and C (minimum value) can be measured with a simple key sequence.

All products to be sold to commercial customers. Product illustrations are without obligation. Product descriptions, in particular any and all technical specifications, are only binding when explicitly agreed upon. For suggested retail prices, please refer to the separate price list.

ABSOLUTE Digimatic Indicator Calculator ID-C

Series 543

This indicator allows you to use a calculation function for the measured value $Ax+B+Cx^{-1}$

- The integrated calculation formula is useful in a variety of applications (e.g. roll diameter measurement)
- Coefficients A,B and C are freely definable. X = displacement of the plunger
- Analogue bar graph in the display (14 different scales switchable)
- GO/±NG tolerance judgement function
- MAX/MIN/RANGE function to measure peak values
- A fast measurement frequency mode(detection cycle 20ms or 50times/s) is selectable to measure in the peak detection mode (MAX/MIN/RANGE) more reliably
- Easy indicator setup via a setup menu
- A USB interface box can be used to set up the indicator from PC via dedicated software

543-340B

543-590B

543-595B

Functions	Series 543
PRESET (x3)	●
ZERO/ABS	●
GO/±NG judgement	●
Digimatic data output	●
ON/OFF	●
DATA/HOLD	●
Analogue measuring range switchable	●
MAX/MIN/RANGE	●
Lock function	●
Fast measurement mode	●
Calculation function	●
Selectable resolution	●

Specifications

Accuracy	Refer to the list of specifications (excluding quantizing error)
Digital step	0,0002/ 0,0005/ 0,001/ 0,002/ 0,005/ 0,01/ 0,02/ 0,05/ 0,1/ 0,2/ 0,5/ 1 mm or non-unit (scale resolution is 0,001 mm)
Scale	Capacitance type, ABSOLUTE linear encoder
Max. response speed	Unlimited
Stem Ø	8 mm
Measurement frequency	Standard mode: 10 times/s "Fast" mode: 50 times/s
Contact point	Carbide ball, thread M 2,5 x 0,45 mm
Alarm	Low voltage, ABS composition error, overflow error, tolerance limit setting error
Power supply	1 battery CR2032
Battery life	Standard mode: approx. 1 year "Fast" mode: approx. 4,5 month
Display	LCD, character height 8 mm Rotatable 330°

Optional accessories

No.	Description
905338	Digimatic Cable, Flat Straight Type, 1m
905409	Digimatic Cable, Flat Straight Type, 2 m
02AZD790F	U-WAVE T Connection Cable F, Flat Straight Type
06ADV380F	USB Input Tool Direct (Digimatic USB) cable, 2m, Flat Straight Type
21EZA313	USB Interface for PC Setup, ID-C Indicator
540774	Spindle Lifting Cable, 500mm
21EZA198	Spindle Lifting Lever, for 12,7mm Range
21FAJ394	Angle Plate, 25-70mm
21FAJ395	Roll Type Base, Outside: 45-140mm, Inside:65-100mm
K541281	Base for Calc. IDC, 50-100 mm
K541282	Base for Calc. IDC, 100-200 mm

Consumable spares

No.	Description
05SAA217D	Lithium battery CR-2032, 1 pcs.
901312	Contact Element Ball Point, 7,3mm Length, Carbide, Metric

Metric

No.	Range [mm]	Accuracy	Measuring force [N]	Mass [g]
543-340B	12,7	0,003 mm	≤ 1,5	170
543-590B	25,4	0,003 mm	≤ 1,8	190
543-595B	50,8	0,006 mm	≤ 2,3	260

No.	R
21FAJ394	25 - 70 mm
K541281	50 - 100 mm
K541282	100 - 200 mm
21FAJ395	outside : 45-140 mm / inside : 65-100 mm

The accuracy of a radial measurement using the measuring bridges depends on the size of the radius to be measured and the form error of the workpiece.

All products to be sold to commercial customers. Product illustrations are without obligation. Product descriptions, in particular any and all technical specifications, are only binding when explicitly agreed upon. For suggested retail prices, please refer to the separate price list.

ABSOLUTE Digimatic Indicator Calculator ID-C

21FAJ394

K541281

K541282

21FAJ395

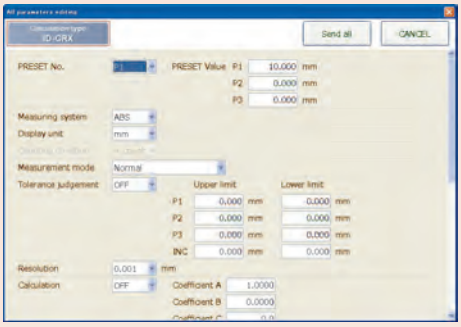

Setup software available for download at www.mitutoyo.eu (Registration is required) (optional USB Interface 21EZA313 is neccessary)

Scan QR Code with your mobile device and watch our product videos on YouTube

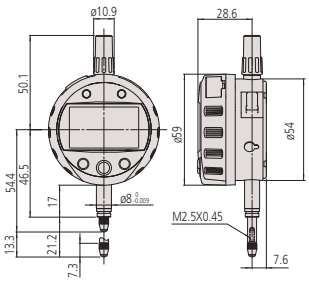

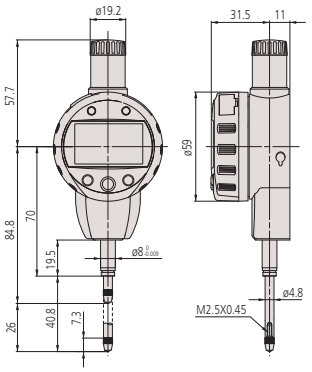

25,4 mm range models

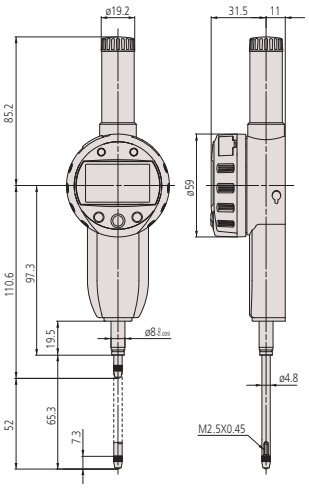

50,8 mm range models

011395

Custom-made solution

Custom-made solution

21FAJ395 (similar)

21FAJ395 (similar)

All products to be sold to commercial customers. Product illustrations are without obligation. Product descriptions, in particular any and all technical specifications, are only binding when explicitly agreed upon. For suggested retail prices, please refer to the separate price list.

ABSOLUTE Digimatic Indicator Bore Gauge ID-C

Series 543

This indicator is designed for inside diameter measurement applications on bore gauges
It offers the following benefits:

- Minimum value holding function that allows you to easily detect a hole diameter
- Analogue bar graph in the display (12 different scales switchable)
- The analogue bar graph enhances usability by adding a dial gauge "feel" to digital measurement
- GO/±NG tolerance judgement function
- A fast measurement frequency mode(detection cycle 20ms or 50times/s) is selectable to measure in the peak detection mode more reliably
- Easy indicator setup via a setup menu
- A USB interface box can be used to set up the indicator from PC via dedicated software

543-310B

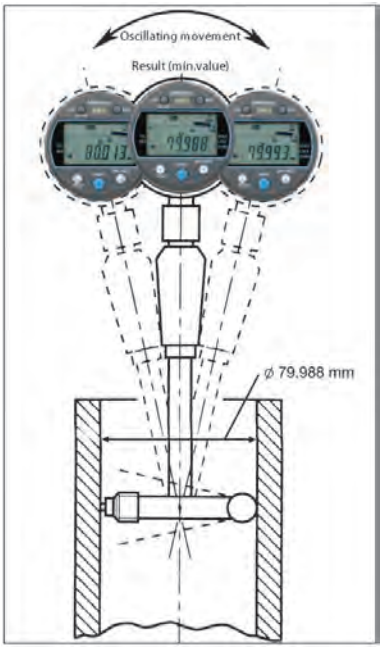

Metric

No.	Range [mm]	Digital step	Accuracy	Measuring force [N]	Mass [g]
543-310B	12,7	0,001/0,01 mm	0,003	≤ 1,5	170

Also available! Metric/Inch Models

Also available! Inch/Metric Models

Functions	Series 543
PRESET (x3)	●
GO/±NG judgement	●
Digimatic data output	●
ON/OFF	●
DATA/HOLD	●
Analogue measuring range switchable	●
MIN Value Hold	●
Lock function	●
Fast measurement mode	●

Specifications

Accuracy	Refer to the list of specifications (excluding quantizing error)
Stem Ø	8 mm
Max. response speed	Unlimited
Measurement frequency	Standard mode: 10 times/s " Fast" mode: 50 times/s*
Contact point	Carbide ball, thread M 2,5 x 0,45 mm
Alarm	Low voltage, composition error, overflow error, tolerance limit setting error
Scale	Capacitance ABSOLUTE linear encoder
Power supply	1 Battery CR 2032
Battery life	Standard mode: approx. 1 year "Fast" mode: approx. 4,5 month
Display	LCD character height:8 mm Rotatable 330°

Optional accessories

No.	Description
905338	Digimatic Cable, Flat Straight Type, 1m
905409	Digimatic Cable, Flat Straight Type, 2 m
02AZD790F	U-WAVE T Connection Cable F, Flat Straight Type
06ADV380F	USB Input Tool Direct (Digimatic USB) cable, 2m, Flat Straight Type
21EZA313	USB Interface for PC Setup, ID-C Indicator

Consumable spares

No.	Description
05SAA217D	Lithium battery CR-2032, 1 pcs.
901312	Contact Element Ball Point, 7,3mm Length, Carbide, Metric

Scan QR Code with your mobile device and watch our product videos on YouTube

* if the detecting speed is > 50 µm/s the peak value may not be displayed correctly.

All products to be sold to commercial customers. Product illustrations are without obligation. Product descriptions, in particular any and all technical specifications, are only binding when explicitly agreed upon. For suggested retail prices, please refer to the separate price list.

ABSOLUTE Digimatic Indicator Signal ID-C

Functions	Series 543
Signal output: (+NG, OK, -NG)	●
Signal input: No-voltage input, (PRESET_RECALL/ZERO, HOLD_RESET)	●
PRESET (x3)	●
ZERO/ABS	●
GO/±NG judgement	●
ON/OFF	●
Analogue measuring range switchable	●
GO/±NG judgement via LED	●
Function lock	●
Counting direction switchable	●
Calculation function	●
GO/±NG judgement on LCD	●
MAX/MIN/RANGE	●

Series 543

ABSOLUTE IP54

This is an externally-powered Digimatic Indicator with a N-ch open drain –NG, OK, +NG output.

- Dust-protected and protected against splashing water, complying with IEC 60529 (equivalent to IP54)
- Measures MAX/MIN/RANGE (run-out value).
- Saves three different Preset and Tolerance settings.
- Fast measurement frequency mode (detection cycle 50times/s) for reliable measurement in the peak detection mode (MAX/MIN/RANGE)
- Calculation function Ax. Coefficient A freely definable, x = displacement of the plunger
- Analogue bar graph in the display (12 different scales switchable)
- GO/±NG tolerance judgment function

Specifications

Accuracy	Refer to the list of specifications (excluding quantizing error)
Measuring force	≤ 2,5 N
Scale	Capacitance type, ABSOLUTE linear encoder
Stem Ø	8 mm
Max. response speed	Unlimited
Measurement frequency	100 times/s (If the plunger speed >0,1 mm/s the peak value could not be displayed correctly.)
Contact point	Carbide ball, thread M 2,4 x 0,45 mm
Alarm	Counting value composition error, overflow error, tolerance limit setting error
Power supply	DC 5 - 24V
Display	LCD, character height 8 mm
Delivered	With signal cable 4 m. One end is fixed to the main unit. no connector is supplied for the other end.

543-350B

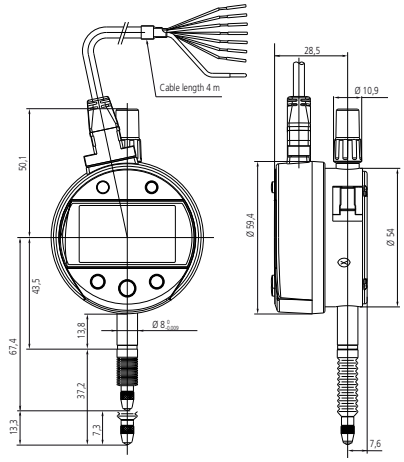

Metric

No.	No. Lug back plate	Range [mm]	Digital step	Accuracy
543-350B	543-350	12,7	0,001 mm	0,003 mm

Optional accessories

No.	Description
540774	Spindle Lifting Cable, 500mm
238774	Silicon rubber boot for ID-C, ID-N, ID-S
21EZA198	Spindle Lifting Lever, for 12,7mm Range
21EZA105	Spindle Lifting Knob, for 12,5mm, Metric

Consumable spares

No.	Description
02ACA376	NBR Rubber Boot, for ID-C, ID-N, ID-S
901312	Contact Element Ball Point, 7,3mm Length, Carbide, Metric

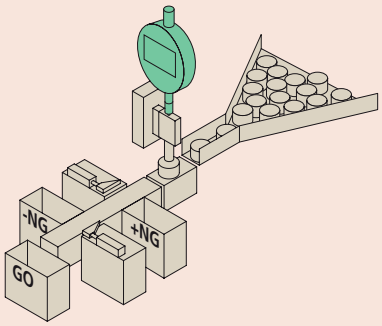

Logic of output signal	Signal name	Tolerance judgment results -NG	OK	+NG	Sensor signal synthesizing error Overflow error of display value
Negative logic	$\overline{-NG}$ (Orange)	Low	High	High	High
	$\overline{OK}$ (Green)	High	Low	High	High
	$\overline{+NG}$ (Brawn)	High	High	Low	High
Positive logic	$\overline{-NG}$ (Orange)	High	Low	Low	Low
	$\overline{OK}$ (Green)	Low	High	Low	Low
	$\overline{+NG}$ (Brawn)	Low	Low	High	Low

Normal mode, Maximum value detection mode, Minimum value detection mode

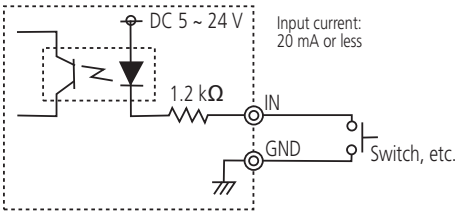

Circuit input

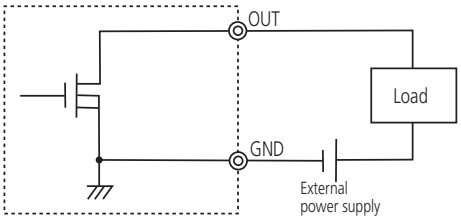

Load voltage: 5 ~ 24 V DC
Maximum load current: 100 mA or less

Circuit output

All products to be sold to commercial customers. Product illustrations are without obligation. Product descriptions, in particular any and all technical specifications, are only binding when explicitly agreed upon. For suggested retail prices, please refer to the separate price list.

Mitutoyo

ABSOLUTE Digimatic Indicator ID-N

Series 543

This is a slim back-plunger model that is highly resilient and robust. The ABSOLUTE Digimatic Indicator ID-N offers you the following benefits:

- It slim body design is ideal for multi-point measurements.
- The ABSOLUTE sensor means you don't have to carry out origin setting every time you power it on, saving you time and hassle.
- It has excellent resistance against water and dust (IP66 protection level) allowing you to use it in machining situations that include splashing coolant fluid.
- Switchable display orientation gives you more mounting options.
- You can perform GO/±NG judgement by setting the upper and lower tolerances.

TÜVRheinland CERTIFIED — Safety Dust- and Water-Protected — www.tuv.com ID 0000007162

ABSOLUTE® IP66

543-575

Flexible installation options switchable display orientation (overhead use)

Width of 35 mm instead of 60 as standard Digimatic indicators

Metric

No.	Range [mm]	Digital step	Accuracy	Measuring force [N]	Mass [g]
543-570	12,7	0,01 mm	0,02 mm	≤ 2,5	130
543-575	12,7	0,01 mm/0,001 mm	0,003/0,01 mm	≤ 2,5	130

Also available! Inch/Metric Models

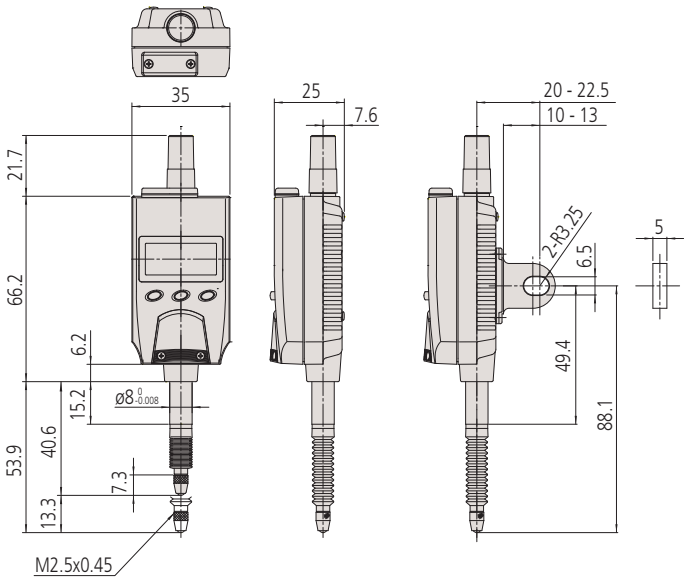

Functions	Series 543
GO/±NG judgement	●
Digimatic data output	●
ON/OFF	●
DATA/HOLD	●
External PRESET/ZERO	●
PRESET	●
Counting direction switchable	●
Selectable resolution*	●

Specifications

Accuracy	Refer to the list of specifications (excluding quantizing error)
Scale	Capacitance type, ABSOLUTE linear encoder
Max. response speed	Unlimited
Stem Ø	8 mm
Contact point	Carbide ball, thread M 2,5 x 0,45 mm
Alarm	Low voltage, counting value composition error, overflow error, tolerance limit setting error
Power supply	1 battery SR-44
Battery life	approx. 7000 hours
Display	LCD, character hight: 6,2 mm

Optional accessories

No.	Description
238774	Silicon rubber boot for ID-C, ID-N, ID-S
21EZA145	Back Plate with Centre Lug, for ID-N/ID-B Indicator, Metric
21EZA105	Spindle Lifting Knob, for 12,5mm, Metric
Digimatic Signal Cables	
21EAA194	Digimatic Cable for ID-N/ ID-B 1m
21EAA190	Digimatic Cable for ID-N/ ID-B 2m
02AZD790G	U-WAVE T Connection Cable G, Flat Straight IP Type
06ADV380G	USB Input Tool Direct (Digimatic USB) cable, 2m, Flat Straight IP Type
21EAA210	Digital Cable for External Preset/Zero, 1 m
21EAA211	Digital Cable for External Preset/Zero, 2 m

Consumable spares

No.	Description
901312	Contact Element Ball Point, 7,3mm Length, Carbide, Metric
938882	Battery SR44 1.5V
02ACA376	NBR Rubber Boot, for ID-C, ID-N, ID-S

21EAA194

194EAA210

* 0,001 mm type

All products to be sold to commercial customers. Product illustrations are without obligation. Product descriptions, in particular any and all technical specifications, are only binding when explicitly agreed upon. For suggested retail prices, please refer to the separate price list.

ABSOLUTE Digimatic Indicator ID-B

Functions	Series 543
GO/±NG judgement	●
Digimatic data output	●
ON/OFF	●
DATA/HOLD	●
External PRESET/ZERO	●
PRESET	●
Counting direction switchable	●
Selectable resolution*	●

Specifications

Accuracy	Refer to the list of specifications (excluding quantizing error)
Scale	Capacitance type, ABSOLUTE linear encoder
Max. response speed	Unlimited
Stem Ø	8 mm
Contact point	Carbide ball, thread M 2,5 x 0,45 mm
Alarm	Low voltage, counting value composition error, overflow error, tolerance limit setting error
Power supply	1 battery SR-44
Battery life	approx. 7000 hours
Display	LCD, character height: 6,2 mm

Optional accessories

No.	Description
21EAA212	Silicon Rubber Boot, for ID-B, Series 1/2
21EZA145	Back Plate with Centre Lug, for ID-N/ID-B Indicator, Metric
Digimatic Signal Cables	
21EAA194	Digimatic Cable for ID-N/ ID-B 1m
21EAA190	Digimatic Cable for ID-N/ ID-B 2m
02AZD790G	U-WAVE T Connection Cable G, Flat Straight IP Type
06ADV380G	USB Input Tool Direct (Digimatic USB) cable, 2m, Flat Straight IP Type
21EAA210	Digital Cable for External Preset/Zero, 1 m
21EAA211	Digital Cable for External Preset/Zero, 2 m

Consumable spares

No.	Description
938882	Battery SR44 1.5V
901312	Contact Element Ball Point, 7,3mm Length, Carbide, Metric
125317	NBR Rubber Boot, for ID-B, IP64 Series 2

21EAA194

21EAA210

*0,001 mm type

Series 543

This is a slim back-plunger model that is highly resilient and robust. The ABSOLUTE Digimatic Indicator ID-B offers you the following features:

- It is a back plunger type, with the display viewed from above.
- Its slim body design is ideal for multi-point measurements.
- The ABSOLUTE sensor means you don't have to carry out origin setting every time you power it on, saving you time and hassle.
- It has excellent resistance against water and dust (IP66 protection level) allowing you to use it in machining situations that include splashing coolant fluid.
- Switchable display orientation gives you more mounting options.
- You can perform GO/±NG judgement by setting the upper and lower tolerances.

543-580

Flexible installation options with switchable display orientation (overhead use)

IP66

Metric

No.	Range [mm]	Digital step	Accuracy	Measuring force [N]	Mass [g]
543-580	5	0,01 mm	0,02 mm	≤ 2	130
543-585	5	0,001 mm/0,01 mm	0,01/0,003 mm	≤ 2	130

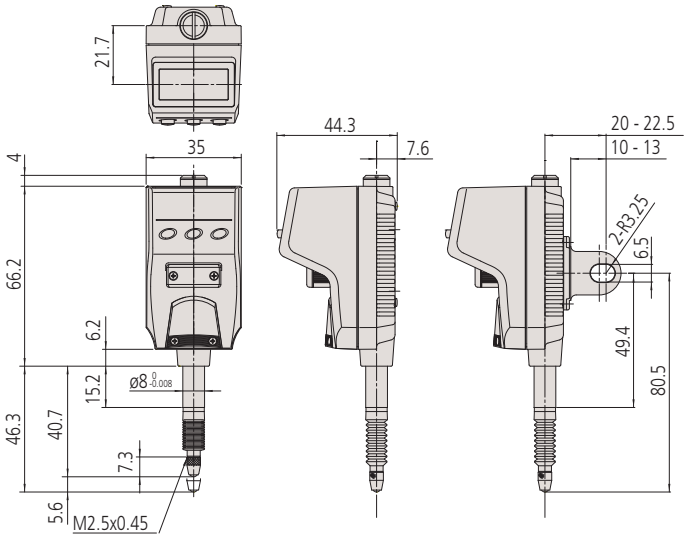

All products to be sold to commercial customers. Product illustrations are without obligation. Product descriptions, in particular any and all technical specifications, are only binding when explicitly agreed upon. For suggested retail prices, please refer to the separate price list.

Digimatic Indicator ID-H

Series 543

This is a superior multi-function indicator that gives you high accuracy and high resolution of 0,0005mm.
The Digimatic Indicator ID-H offers you the following benefits:

- 2-colour LCD backlight (green and red) provides you with visual GO/±NG tolerance judgement and analogue bar-graph display.
- You can display the maximum, minimum or range (runout value) during measurement.
- Lifting mechanism over 30mm with cable release (optional).
- You can carry out zero-setting and presetting with the optional remote controller, without having to touch the indicator.
- The remote control system can be implemented in advance with the built-in RS-232 interface and a PC.
- External power supply via AC-Adapter.

543-561D

21EZA099
Remote Control:
Data export
Reset Max/Min/TIR
Max/Min/TIR switchover
Call PRESET value

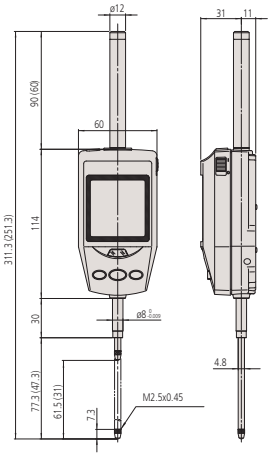

Metric

No.	Range [mm]	Accuracy	Measuring force [N]	Mass [g]
543-561D	30,4	0,0015 mm	≤ 2	290
543-563D	60,9	0,0025 mm	≤ 2,5	305

Also available! Inch/Metric Models

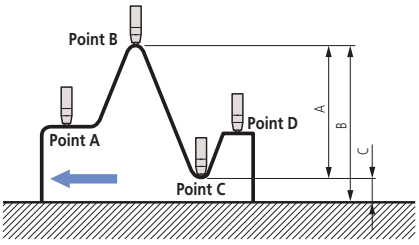

Difference/Runout measurement
Example : indicator travel from points A to D.
Difference (or Total Runout) is displayed as A. Dimensions B (maximum value) and C (minimum value) can be recalled from memory with a simple key sequence.

The display switches from green to red backlight if the upper or lower tolerance limit is exceeded

Max/Min/TIR value measurement

Scan QR Code with your mobile device and watch our product videos on YouTube

Functions	Series 543
ZERO	●
GO/±NG judgement	●
Digimatic data output	●
Digimatic data input	●
ON/OFF	●
DATA/HOLD	●
RS-232C Output*	●
Analogue measuring range switchable	●
Max/Min/Runout value	●
RS-232C Input*	●
Lock function	●
PRESET	●
Counting direction switchable	●
Selectable resolution	●

Specifications

Digital step	0,001 mm/0,0005 mm
Accuracy	Refer to the list of specifications (excluding quantizing error)
Scale	Photoelectric linear encoder
Stem Ø	8 mm
Max. response speed	1000 mm/s
Contact point	Carbide ball, thread M 2,5 x 0,45 mm
Alarm	Counting value composition error, overflow error, tolerance setting error
Power supply	AC adapter 6 V DC, 2A
Display	LCD, character height: 9,5 mm

Standard accessories

No.	Description
06AEG180D	AC-Adapter, 6V 2A, CEE Type
137693	Spindle Lifting Handle

Optional accessories

No.	Description
21EZA099	Remote Controller, for ID-H Indicator
540774	Spindle Lifting Cable, 500mm
21EZA101	Spindle Lifting Knob, for ID-H Indicator
Digimatic Signal Cables	
936937	Digimatic Cable, Flat 10-Pin Type, 1 m
965014	Digimatic Cable, Flat 10-Pin Type, 2 m
02AZD790D	U-WAVE T Connection Cable D, Flat 10-Pin Type
06ADV380D	USB Input Tool Direct (Digimatic USB) cable, Flat 10-Pin Type, 2 m
21EAA130	Cable RS-232C for ID-H Indicator 1m
21EAA131	Cable RS-232C for ID-H Indicator 2m

540774 : moving measuring range max. 30 mm

Consumable spares

No.	Description
901312	Contact Element Ball Point, 7,3mm Length, Carbide, Metric
011511-1	Battery LR03 (AAA), 4x

*** RS-232 Input/Output**
Connect this instrument with an external device such as a PC using the RS-232 dedicated cable (optional accessory). With this connection it is possible to perform initial setup of the instrument, control of switching a measurement mode, etc., and processing such as measurement data transfer.

All products to be sold to commercial customers. Product illustrations are without obligation. Product descriptions, in particular any and all technical specifications, are only binding when explicitly agreed upon. For suggested retail prices, please refer to the separate price list.

ABSOLUTE Digimatic Indicator ID-F

Functions	Series 543
ZERO/ABS	●
GO/±NG judgement	●
Digimatic data output	●
Digimatic data input	●
ON/OFF	●
Analogue measuring range switchable	●
Max/Min/Runout value	●
Lock function	●
Function lock	●
PRESET	●
Counting direction switchable	●
Selectable resolution	●

Specifications

Accuracy	Refer to the list of specifications (excluding quantizing error)
Digital step	0,001 mm/0,01 mm
Scale	Capacitance type, ABSOLUTE linear encoder
Stem Ø	8 mm
Max. response speed	Unlimited
Contact point	Carbide ball, thread M 2,5 x 0,45 mm
Alarm	Counting value composition error, overflow error, tolerance limit setting error
Power supply	AC adapter 9V DC, 500mA
Display	LCD character height 8,5 mm

Standard accessories

No.	Description
06AEG302D	AC-Adapter, 9V 500mA, CEE Type
137693	Spindle Lifting Handle

Optional accessories

No.	Description
540774	Spindle Lifting Cable, 500mm
02ACA571	Auxiliary Spindle Spring, for 25,4mm Range
02ACA773	Auxiliary Spindle Spring, for 50mm Range
Digimatic Signal Cables	
936937	Digimatic Cable, Flat 10-Pin Type, 1 m
965014	Digimatic Cable, Flat 10-Pin Type, 2 m
02AZD790D	U-WAVE T Connection Cable D, Flat 10-Pin Type
06ADV380D	USB Input Tool Direct (Digimatic USB) cable, Flat 10-Pin Type, 2 m

540774 : moving measuring range max.12mm
02ACA571/02ACA773 : required when orienting the indicator upside down

For USB Input Tool Direct cable:
a footswitch (no. 937179T), a footswitch adapter (no. 06ADV384) and USB-ITPAK Software (no. 06AEN846) are required.

Consumable spares

No.	Description
901312	Contact Element Ball Point, 7,3mm Length, Carbide, Metric

Series 543

ABSOLUTE®

This is a superior multifunction indicator.
The ABSOLUTE Digimatic Indicator ID-F offers you the following benefits:
- 2-colour LCD backlight (green and red) provides you with visual GO/±NG tolerance judgement and analogue bar-graph display.
- You can display the maximum, minimum or range (runout value) during measurement.
- External power supply via AC-Adapter.

543-551D

543-553D

Visual tolerance-monitoring

Metric

No.	Range [mm]	Accuracy	Measuring force [N]	Mass [g]
543-551D	25,4	0,003 mm	≤ 1,8	240
543-557D	50,8	0,003 mm	≤ 2,3	330
543-553D	50,8	0,006 mm	≤ 2,3	330

Also available! Inch/Metric Models

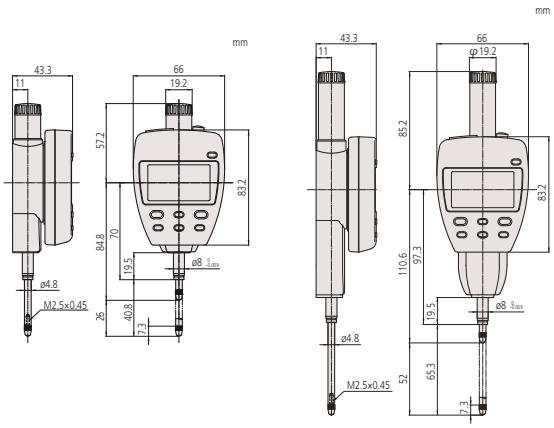

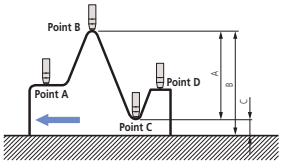

Difference/Runout measurement
Example : indicator travel from points A to D.
Difference (or Total Runout) is displayed as A. Dimensions B (maximum value) and C (minimum value) can be measured with a simple key sequence.

All products to be sold to commercial customers. Product illustrations are without obligation. Product descriptions, in particular any and all technical specifications, are only binding when explicitly agreed upon. For suggested retail prices, please refer to the separate price list.

Mitutoyo

Dial Indicator Series 1

Series 1

This is a compact, small diameter metric indicator that offers you the following benefits:
- It is ideal for use in applications where space is limited.
- Bezel ø 31mm, ø 36mm, ø 40mm

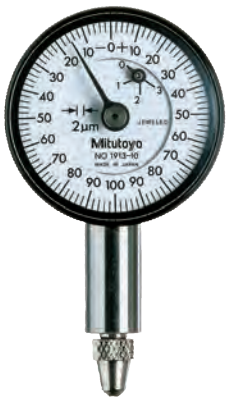

1913T-10

1003TB

1109S-10

Functions	1003TB 1911TB-10	1913TB-10	1013SB-10 1109SB-10	1124SB
Balanced dial	●	●	●	
Continuous dial				●
Shockproof			●	
Jeweled bearing		●	●	

Consumable spares

No.	Description
21AZA319	Contact Element Ball Point, 8,3mm Length, Metric
901312	Contact Element Ball Point, 7,3mm Length, Carbide, Metric

901312 : for 1109S-10 / 1013S-10 / 1124S
21AZA319 : for 1913T-10 / 1911T-10 / 1003T-10

For accessories and contact points, see end of dial indicators section

mm

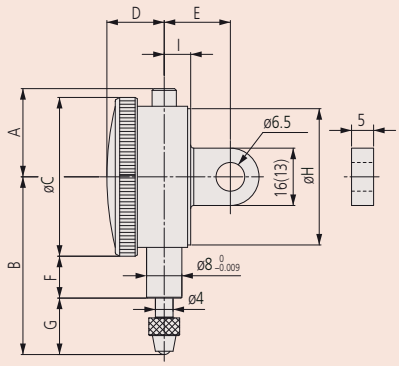

Metric

No.	No. with Lug back plate	Range [mm]	Range per rev.	Graduation	Scale	Measuring force [N]
1913TB-10	1913T-10	0,5	0,2 mm	0,002 mm	0-100-0	0,3 - 1,8
1109SB-10	1109S-10	1	0,2 mm	0,001 mm	0-100-0	0,4 - 1,5
1013SB-10	1013S-10	1	0,2 mm	0,002 mm	0-100-0	0,4 - 1,5
1911TB-10	1911T-10	2,5	1 mm	0,01 mm	0-50-0	0,3 - 1,8
1124SB	1124S	3,5	0,5 mm	0,005 mm	0-50 (50-0)	0,4 - 1,4
1003TB	1003T	4	1 mm	0,01 mm	0-50-0	0,3 - 1,4

No.	Mass lug/plain [g]	A [mm]	B [mm]	C [mm]	D [mm]	E [mm]	F [mm]	G [mm]	H [mm]	I [mm]
1913TB-10	50/46	15,5	39,4	31	12,5	19,4	15,2	8,9	30	6
1109SB-10	95/75	32,5	49	40	14,5	20	13,8	15,2	38	6,6
1013SB-10	95/75	32,5	49	40	14,5	20	13,8	15,2	38	6,6
1911TB-10	50/46	15,5	42	31	12,5	19,4	15,1	11,5	30	6
1124SB	90/70	32,5	46	40	14,5	20	13,8	12,2	38	6,6
1003TB	51/48	18	40,3	36	13	15	9,5	12,8	32	6

No.	DIN 878 (1983)			EN ISO 463					
				Errors of indication over a range of				Repeatability	Hysteresis error
	fe µm	fges µm	fu µm	Any 1/10 revolution µm	Any 1/2 revolution µm	Any 1 revolution µm	Range µm	µm	µm
1913TB-10	5	7	2	2,5	4,5	5	6	1	2,5
1109SB-10	4	6	2	2,5	4	4,5	5	1	2
1013SB-10	8	4	2	2,5	4	4,5	6	1	2
1911TB-10	10	13	3	6,5	10	11	13	3	3,5
1124SB	12	14	3	5	8	9	12	3	3
1003TB	12	13	3	6	9	10	14	3	3,5

1911T-10

1013S-10

1124S

All products to be sold to commercial customers. Product illustrations are without obligation. Product descriptions, in particular any and all technical specifications, are only binding when explicitly agreed upon. For suggested retail prices, please refer to the separate price list.

Dial Indicator Series 1

Functions	1040SB	1044SB	1044SB-60	1044SB-15	1041SB	1045SB
Balanced dial					●	●
Continuous dial	●	●	●	●		
Jeweled bearing				●		
IP63			●			
Double scale spacing	●				●	

Series 1

Consumable spares

No.	Description
901312	Contact Element Ball Point, 7,3mm Length, Carbide, Metric
136838	NBR Rubber Boot, IP63 Series 1
902119	Contact Element Ball Point, 8,3mm Length, Waterproof Type, Metric

136838 and 902119 : for 1044S-60 (IP model)

For accessories and contact points, see end of dial indicators section

1044S-60
IP63

1044S-15

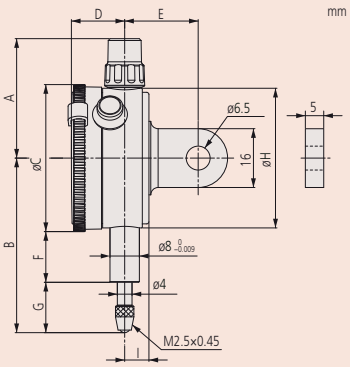

Series 1

This is a compact, small diameter metric indicator that offers you the following benefits:
- It is ideal for use in applications where space is limited.
- Bezel ø 40mm

IP63
1044S(B)-60

1044S

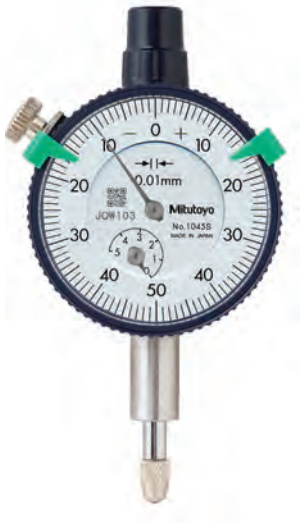

1045S

1040S

Metric

No.	No. with Lug back plate	Range [mm]	Range per rev.	Graduation	Scale	Measuring force [N]
1040SB	1040S	3,5	0,5 mm	0,01 mm	0-50 (50-0)	0,4 - 1,4
1041SB	1041S	3,5	0,5 mm	0,01 mm	0-25-0	0,4 - 1,4
1044SB	1044S	5	1 mm	0,01 mm	0-100 (100-0)	0,4 - 1,4
1044SB-15	1044S-15	5	1 mm	0,01 mm	0-100 (100-0)	0,1 - 0,4
1044SB-60	1044S-60	5	1 mm	0,01 mm	0-100 (100-0)	0,4 - 2
1045SB	1045S	5	1 mm	0,01 mm	0-50-0	0,4 - 1,4

1044SB-15: Low measuring force model. Use in vertical position only (contact point downward)

No.	Mass lug/plain [g]	A [mm]	B [mm]	C [mm]	D [mm]	E [mm]	F [mm]	G [mm]	H [mm]	I [mm]
1040SB	90/70	32,5	46	40	14,5	20	13,8	12,2	38	6,6
1041SB	90/70	32,5	46	40	14,5	20	13,8	12,2	38	6,6
1044SB	90/70	32,5	47,5	40	14,5	20	13,8	13,7	38	6,6
1044SB-15	90/70	32,5	47,5	40	14,5	20	13,8	13,7	38	6,6
1044SB-60	90/70	32,5	57	40	14,5	20	12,2	24,8	38	6,6
1045SB	90/70	32,5	47,5	40	14,5	20	13,8	13,7	38	6,6

No.	DIN 878 (1983)			EN ISO 463					
				Errors of indication over a range of					
	fe µm	fges µm	fu µm	Any 1/10 revolution µm	Any 1/2 revolution µm	Any 1 revolution µm	Range µm	Repeatability µm	Hysteresis error µm
1040SB	12	14	3	5	8	9	12	3	3
1041SB	12	14	3	5	8	9	12	3	3
1044SB	12	14	3	5	9	10	12	3	3
1044SB-15	12	14	3	5	9	10	12	3	3
1044SB-60	12	14	3	5	9	10	12	3	3
1045SB	12	14	3	5	9	10	12	3	3

All products to be sold to commercial customers. Product illustrations are without obligation. Product descriptions, in particular any and all technical specifications, are only binding when explicitly agreed upon. For suggested retail prices, please refer to the separate price list.

One Revolution Dial Indicator Series 1

Series 1

This is a compact model of indicator that offers you the following benefits:
- By limiting the pointer rotation to one revolution, reading errors that can occur with other dial indicators are eliminated.
- Bezel ø 40mm.

1929S

1929S-62

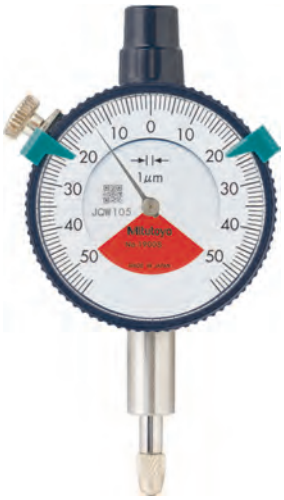

1900S-72

Functions	1900SB-72	1929SB	1929SB-62
Balanced dial	●	●	●
One revolution	●	●	●
Shockproof	●	●	●
Jeweled bearing	●		
IP52	●		●

Consumable spares

No.	Description
901312	Contact Element Ball Point, 7,3mm Length, Carbide, Metric

For accessories and contact points, see end of dial indicators section.

mm

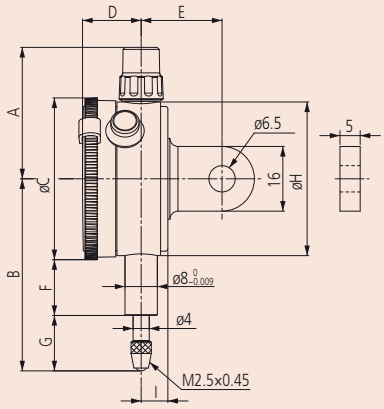

Metric

No.	No. with Lug back plate	Range	Range per rev.	Graduation	Scale	Measuring force [N]
1929SB	1929S	1 (plunger stroke:3,5)	1,4 mm	0,01 mm	50-0-50	0,4 - 1,4
1929SB-62	1929S-62	1 (plunger stroke: 3,5)	1,4 mm	0,01 mm	50-0-50	0,4 - 1,4
1900SB-72	1900S-72	0,1 (plunger stroke: 2)	0,14 mm	0,001 mm	50-0-50	0,4 - 1,4

No.	Mass lug/plain [g]	A [mm]	B [mm]	C [mm]	D [mm]	E [mm]	F [mm]	H [mm]	G [mm]	I [mm]
1929SB	90/70	32,5	47,5	40	14,5	20	13,8	38	13,7	6,6
1929SB-62	90/70	32,5	47,5	40	14,5	20	13,8	38	13,7	6,6
1900SB-72	95/75	32,5	53,5	40	14,5	20	16,8	38	16,7	6,6

No.	DIN 878 (1983)			EN ISO 463					
				Errors of indication over a range of					
	fe µm	fges µm	fu µm	Any 1/10 revolution µm	Any 1/2 revolution µm	Any 1 revolution µm	Range µm	Repeatability µm	Hysteresis error µm
1929SB	10	13	3	5			9	3	3
1929SB-62	10	13	3	5			9	3	3
1900SB-72	3	5	2	2			4	1	2

All products to be sold to commercial customers. Product illustrations are without obligation. Product descriptions, in particular any and all technical specifications, are only binding when explicitly agreed upon. For suggested retail prices, please refer to the separate price list.

Dial Indicator Series 2

Functions	Series 2			
	2044SB	2044SB-60	2044SB-09	2045SB
Balanced dial				●
Continuous dial	●	●	●	
Shockproof			●	
IP64		●		

Consumable spares

No.	Description
901312	Contact Element Ball Point, 7,3mm Length, Carbide, Metric
902119	Contact Element Ball Point, 8,3mm Length, Waterproof Type, Metric
125317	NBR Rubber Boot, for ID-B, IP64 Series 2

902119 and 125317 : for 2044S-60 (IP model)

For accessories and contact points, see end of dial indicators section

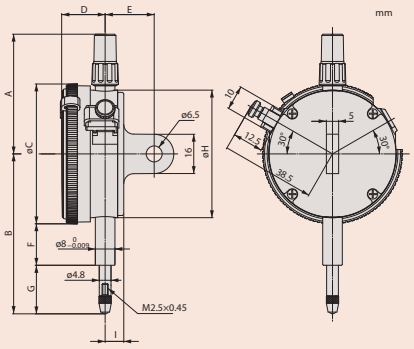

Series 2

This is a standard type metric dial indicator with 0,01mm scale graduation, with bezel Ø 57mm, 5mm/10mm range

2044S(B)-60

2044S 2044S-60 2045S

Metric

No.	No. with Lug back plate	Range [mm]	Range per rev.	Graduation	Scale	Measuring force [N]
2044SB	2044S	5	1 mm	0,01 mm	0-100 (100-0)	0,4 - 1,4
2044SB-09	2044S-09	5	1 mm	0,01 mm	0-100 (100-0)	0,4 - 1,4
2044SB-60	2044S-60	5	1 mm	0,01 mm	0-100 (100-0)	0,4 - 2,5
2045SB	2045S	5	1 mm	0,01 mm	0-50-0	0,4 - 1,4

No.	Mass lug/plain [g]	A [mm]	B [mm]	C [mm]	D [mm]	E [mm]	F [mm]	H [mm]	G [mm]	I [mm]
2044SB	145/136	48,8	65,2	57	17,7	20	16,9	52	19,8	7,6
2044SB-09	147/138	48,8	65,2	57	17,7	20	16,9	52	19,8	7,6
2044SB-60	147/138	48,8	70	57	17,7	20	12,3	52	29,2	7,6
2045SB	145/136	48,8	65,2	57	17,7	20	16,9	52	19,8	7,6

No.	DIN 878 (1983)			EN ISO 463					
				Errors of indication over a range of					
	fe µm	fges µm	fu µm	Any 1/10 revolution µm	Any 1/2 revolution µm	Any 1 revolution µm	Range µm	Repeatability µm	Hysteresis error µm
2044SB	10	13	3	5	9	10	12	3	3
2044SB-09	10	13	3	5	9	10	12	3	3
2044SB-60	10	13	3	5	9	10	12	3	3
2045SB	10	13	3	5	9	10	12	3	3

All products to be sold to commercial customers. Product illustrations are without obligation. Product descriptions, in particular any and all technical specifications, are only binding when explicitly agreed upon. For suggested retail prices, please refer to the separate price list.

Dial Indicator Series 2

Series 2

This is a standard type metric dial indicator with 0,01mm scale graduation, with bezel Ø 57mm, 10mm range

2046S(B)-60

2046S

2902S

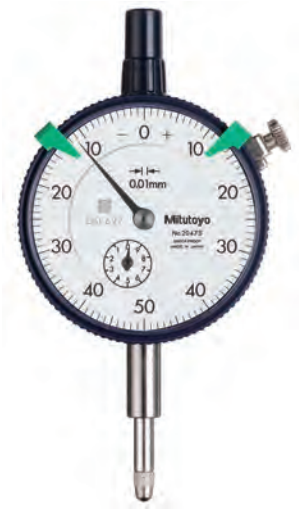

2047S

Functions	Series 2					
	2046SB	2046SB-60	2310SB-10	2046SB-09	2902SB	2047SB
Balanced dial						●
Continuous dial	●	●	●	●	●	
Reverse reading					●	
Shockproof				●		
Jeweled bearing			●			
IP64		●				
Coaxial revolution counter			●			

Consumable spares

No.	Description
901312	Contact Element Ball Point, 7,3mm Length, Carbide, Metric
902119	Contact Element Ball Point, 8,3mm Length, Waterproof Type, Metric
125317	NBR Rubber Boot, for ID-B, IP64 Series 2

902119 and 125317 : for 2046S-60 (IP model)

For accessories and contact points, see end of dial indicators section

Metric

No.	No. with Lug back plate	Range [mm]	Range per rev.	Graduation	Scale	Measuring force [N]
2046SB	2046S	10	1 mm	0,01 mm	0-100 (100-0)	0,4 - 1,4
2046SB-09	2046S-09	10	1 mm	0,01 mm	0-100 (100-0)	0,4 - 1,4
2046SB-60	2046S-60	10	1 mm	0,01 mm	0-100 (100-0)	0,4 - 2,5
2310SB-10	2310S-10	10	1 mm	0,01 mm	0-100 (100-0)	0,4 - 1,4
2902SB	2902S	10	1 mm	0,01 mm	100-0	0,4 - 1,4
2047SB	2047S	10	1 mm	0,01 mm	0-50-0	0,4 - 1,4

No.	Mass lug/plain [g]	A [mm]	B [mm]	C [mm]	D [mm]	E [mm]	F [mm]	H [mm]	G [mm]	I [mm]
2046SB	144/135	48,8	65,2	57	17,7	20	16,9	52	19,8	7,6
2046SB-09	146/137	48,8	65,2	57	17,7	20	16,9	52	19,8	7,6
2046SB-60	146/137	48,8	70	57	17,7	20	12,3	52	29,2	7,6
2310SB-10	146/137	48,8	65,2	57	17,7	20	16,9	52	19,8	7,6
2902SB	144/135	48,8	65,2	57	17,7	20	16,9	52	19,8	7,6
2047SB	144/135	48,8	65,2	57	17,7	20	16,9	52	19,5	7,6

No.	DIN 878 (1983)			EN ISO 463					
				Errors of indication over a range of					
	fe µm	fges µm	fu µm	Any 1/10 revolution µm	Any 1/2 revolution µm	Any 1 revolution µm	Range µm	Repeatability µm	Hysteresis error µm
2046SB	12	15	3	5	9	10	13	3	3
2046SB-09	15	17	3	5	9	10	15	3	3
2046SB-60	12	15	3	5	9	10	13	3	3
2310SB-10	12	15	3	5	9	10	15	3	3
2902SB	12	15	3	5	9	10	13	3	3
2047SB	12	15	3	5	9	10	13	3	3

2046S-60

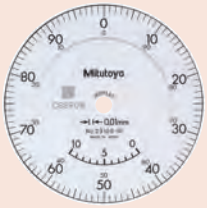

2310S-10

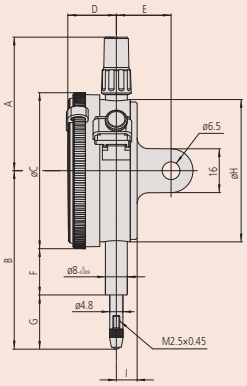

All products to be sold to commercial customers. Product illustrations are without obligation. Product descriptions, in particular any and all technical specifications, are only binding when explicitly agreed upon. For suggested retail prices, please refer to the separate price list.

Dial Indicator Series 2

Functions	Series 2			
	2109SB-10	2109SB-70	2110SB-10	2110SB-70
Balanced dial	●	●		
Continuous dial			●	●
Shockproof	●	●	●	●
Jeweled bearing	●	●	●	●
IP64		●		●
Double scale spacing			●	●

Consumable spares

No.	Description
901312	Contact Element Ball Point, 7,3mm Length, Carbide, Metric
21AZA320	Contact Element Ball Point, 12,1mm Length, Waterproof Type, Metric
902119	Contact Element Ball Point, 8,3mm Length, Waterproof Type, Metric
125317	NBR Rubber Boot, for ID-B, IP64 Series 2

902119 : for 2110S-70
21AZA320 and 136838 : for 2109S-70

For accessories and contact points, see end of dial indicators section.

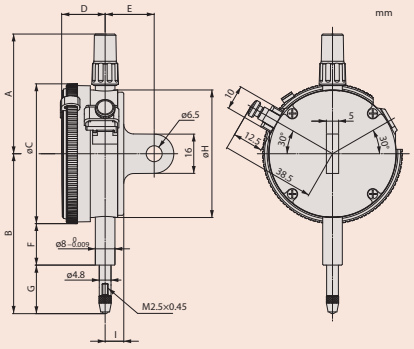

Series 2

This is a standard type metric dial indicator with 0,001mm scale graduation, with bezel Ø 57mm, 1mm range

2109S-70
2110S-70

2110S-10

2110S-70

2109S-10

Metric

No.	No. with Lug back plate	Range [mm]	Range per rev.	Graduation	Scale	Measuring force [N]
2110SB-10	2110S-10	1	0,1 mm	0,001 mm	0-100 (100-0)	0,9 - 1,5
2110SB-70	2110S-70	1	0,1 mm	0,001 mm	0-100 (100-0)	0,9 - 2
2109SB-10	2109S-10	1	0,2 mm	0,001 mm	0-100-0	0,9 - 1,5
2109SB-70	2109S-70	1	0,2 mm	0,001 mm	0-100-0	0,9 - 2

No.	Mass lug/plain [g]	A [mm]	B [mm]	C [mm]	D [mm]	E [mm]	F [mm]	H [mm]	G [mm]	I [mm]
2110SB-10	149/140	48,8	66,5	57	17,7	20	16,9	52	21,2	7,6
2110SB-70	150/141	48,8	67,5	57	17,7	20	12,3	52	26,7	7,6
2109SB-10	148/139	48,8	60,5	57	17,7	20	16,9	52	15,1	7,6
2109SB-70	149/140	48,8	65,5	57	17,7	20	12,3	52	24,5	7,6

No.	DIN 878 (1983)			EN ISO 463					
				Errors of indication over a range of					
	fe µm	fges µm	fu µm	Any 1/10 revolution µm	Any 1/2 revolution µm	Any 1 revolution µm	Range µm	Repeatability µm	Hysteresis error µm
2110SB-10	3	5	2	2,5	4	4,5	5	1	2
2110SB-70	3	5	2	2,5	4	4,5	5	1	2
2109SB-10	3	5	2	2,5	4	4,5	5	1	2
2109SB-70	3	5	2	2,5	4	4,5	5	1	2

All products to be sold to commercial customers. Product illustrations are without obligation. Product descriptions, in particular any and all technical specifications, are only binding when explicitly agreed upon. For suggested retail prices, please refer to the separate price list.

Dial Indicator Series 2

Series 2

This is a standard type with 0,001mm/0,005mm scale graduation, with bezel Ø 57mm, 2/5mm range

2113S-10

2118S-10

2119S-10

Functions	2113SB-10	2119SB-10	2118SB-10	2124SB-10
Balanced dial	●	●		
Continuous dial				●
Shockproof	●			
Jeweled bearing	●	●	●	●

Consumable spares

No.	Description
901312	Contact Element Ball Point, 7,3mm Length, Carbide, Metric

For accessories and contact points, see end of dial indicators section.

2124S

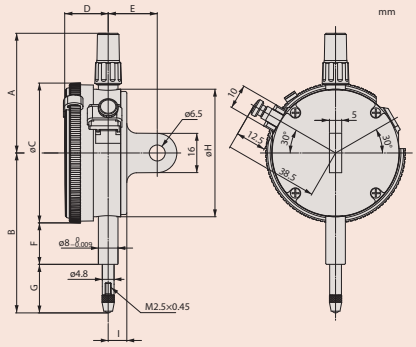

Metric

No.	No. with Lug back plate	Range [mm]	Range per rev.	Graduation	Scale	Measuring force [N]
2113SB-10	2113S-10	2	0,2 mm	0,001 mm	0-100-0	0,4 - 1,5
2118SB-10	2118S-10	5	0,2 mm	0,001 mm	0-100-100	0,4 - 1,5
2119SB-10	2119S-10	5	0,2 mm	0,001 mm	0-100-0	0,4 - 1,5
2124SB-10	2124S-10	5	0,5 mm	0,005 mm	0-50 (50-0)	0,4 - 1,5

No.	Mass lug/plain [g]	A [mm]	B [mm]	C [mm]	D [mm]	E [mm]	F [mm]	H [mm]	G [mm]	I [mm]
2113SB-10	148/139	48,8	61	57	17,7	20	16,9	52	15,6	7,6
2118SB-10	146/137	48,8	60,3	57	17,7	20	16,9	52	14,9	7,6
2119SB-10	146/137	48,8	60,3	57	17,7	20	16,9	52	14,9	7,6
2124SB-10	146/137	48,8	60,3	57	17,7	20	16,9	52	14,9	7,6

No.	DIN 878 (1983)			EN ISO 463					
				Errors of indication over a range of					
	fe µm	fges µm	fu µm	Any 1/10 revolution µm	Any 1/2 revolution µm	Any 1 revolution µm	Range µm	Repeatability µm	Hysteresis error µm
2113SB-10	5	7	2	2,5	4	4,5	7	1	2
2118SB-10	8	10	2	4	6	6,5	10	1,5	2,5
2119SB-10	8	10	2	4	6	6,5	10	1,5	2,5
2124SB-10	10	5	3	5	9	10	11	2	3

All products to be sold to commercial customers. Product illustrations are without obligation. Product descriptions, in particular any and all technical specifications, are only binding when explicitly agreed upon. For suggested retail prices, please refer to the separate price list.

Dial Indicator with 20 mm Stroke Series 2

Functions	Series 2			
	2050SB	2320SB-10	2050SB-60	2050SB-19
Continuous dial	●	●	●	●
Shockproof				●
Jeweled bearing	●	●	●	●
IP64			●	
Cushioned end point	●	●	●	●
Coaxial revolution counter		●		

Consumable spares

No.	Description
901312	Contact Element Ball Point, 7,3mm Length, Carbide, Metric
21AZA321	Contact Element Ball Point, 19,3mm Length, Waterproof Type, Metric
136071	NBR Rubber Boot, IP64 Series 2

21AZA321 and 136071 : for 2050S-60 (IP model)

For accessories and contact points, see end of dial indicators section.

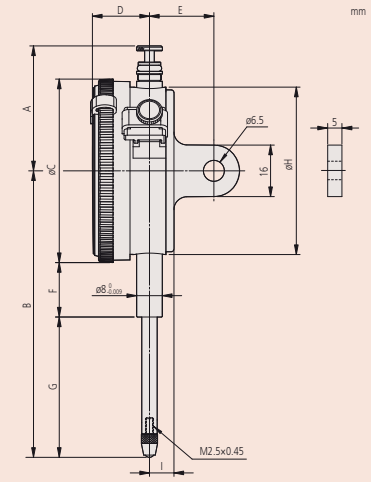

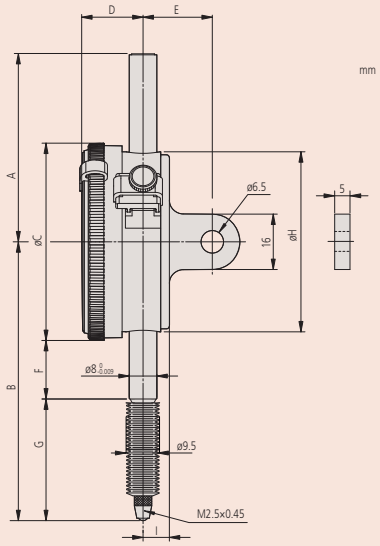

2050SB-60

Series 2

This is a standard metric dial indicator that offers you the following benefits:

- 20mm stroke.
- Bezel ø 57mm, graduation 0,01mm

2050S(B)-60

2050S

2320S-10

Metric

No.	No. with Lug back plate	Range [mm]	Range per rev.	Graduation	Scale	Measuring force [N]
2050SB	2050S	20	1 mm	0,01 mm	0-100 (100-0)	0,4 - 2
2050SB-60	2050S-60	20	1 mm	0,01 mm	0-100 (100-0)	0,4 - 2,5
2050SB-19	2050S-19	20	1 mm	0,01 mm	0-100 (100-0)	0,4 - 2
2320SB-10	2320S-10	20	1 mm	0,01 mm	0-100 (100-0)	0,4 - 2

No.	Mass lug/plain [g]	A [mm]	B [mm]	C [mm]	D [mm]	E [mm]	F [mm]	H [mm]	G [mm]	I [mm]
2050SB	149/140	38,8	75,2	57	17,7	20	16,9	52	29,8	7,6
2050SB-60	155/146	38,8	75,2	57	17,7	20	12,3	52	29,8	7,6
2050SB-19	149/140	38,8	75,2	57	17,7	20	16,9	52	29,8	7,6
2320SB-10	150/141	38,8	75,2	57	17,7	20	16,9	52	29,8	7,6

No.	DIN 878 (1983)			EN ISO 463					
				Errors of indication over a range of					
	fe µm	fges µm	fu µm	Any 1/10 revolution µm	Any 1/2 revolution µm	Any 1 revolution µm	Range µm	Repeatability µm	Hysteresis error µm
2050SB	25	30	4	6	10	11	20	3	4
2050SB-60	25	30	4	6	10	11	20	3	4
2050SB-19	25	30	4	6	10	11	20	3	4
2320SB-10	25	30	4	6	10	11	20	3	4

All products to be sold to commercial customers. Product illustrations are without obligation. Product descriptions, in particular any and all technical specifications, are only binding when explicitly agreed upon. For suggested retail prices, please refer to the separate price list.

Dial Indicator with 30 mm Stroke Series 2

Series 2

This is a standard metric dial indicator that offers you the following benefits:
- 30mm stroke.
- Bezel ø 57mm, graduation 0,01mm

2052S-19

2952S

2330S-10

Functions	Series 2			
	2052SB	2330SB-10	2052SB-19	2952SB
Continuous dial	●	●	●	
Reverse reading				●
Shockproof			●	
Jeweled bearing	●	●	●	●
Cushioned end point	●	●	●	●
Coaxial revolution counter		●		

Consumable spares

No.	Description
901312	Contact Element Ball Point, 7,3mm Length, Carbide, Metric

For accessories and contact points, see end of dial indicators section.

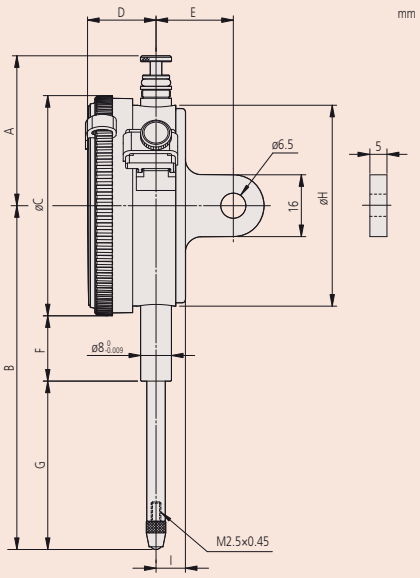

Metric

No.	No. with Lug back plate	Range [mm]	Range per rev.	Graduation	Scale	Measuring force [N]
2052SB	2052S	30	1 mm	0,01 mm	0-100 (100-0)	0,4 - 2,5
2052SB-19	2052S-19	30	1 mm	0,01 mm	0-100 (100-0)	0,4 - 2,5
2330SB-10	2330S-10	30	1 mm	0,01 mm	0-100 (100-0)	0,4 - 2,5
2952SB	2952S	30	1 mm	0,01 mm	100-0	0,4 - 2,5

No.	Mass lug/plain [g]	A [mm]	B [mm]	C [mm]	D [mm]	E [mm]	F [mm]	H [mm]	G [mm]	I [mm]
2052SB	152/143	38,8	88,7	57	17,7	20	16,9	52	43,3	7,6
2052SB-19	152/143	38,8	88,7	57	17,7	20	16,9	52	43,3	7,6
2330SB-10	150/141	38,8	88,7	57	17,7	20	16,9	52	43,3	7,6
2952SB	152/143	38,8	88,7	57	17,7	20	16,9	52	43,3	7,6

No.	DIN 878 (1983)			EN ISO 463					
				Errors of indication over a range of				Repeatability	Hysteresis error
	fe µm	fges µm	fu µm	Any 1/10 revolution µm	Any 1/2 revolution µm	Any 1 revolution µm	Range µm	µm	µm
2052SB	30	35	4	7	11	12	25	3	5
2052SB-19	30	35	4	7	11	12	25	3	5
2330SB-10	30	35	4	7	11	12	25	3	5
2952SB	30	35	4	7	11	12	25	3	5

All products to be sold to commercial customers. Product illustrations are without obligation. Product descriptions, in particular any and all technical specifications, are only binding when explicitly agreed upon. For suggested retail prices, please refer to the separate price list.

Special Dial Indicator Series 2

Functions	Series 2 2046SB-80	Series 2 2048SB-10
Balanced dial		●
Continuous dial	●	●
Jeweled bearing		●
Peak retaining	●	
Coaxial revolution counter		●
Adjustable pointer		●

Consumable spares

No.	Description
21AZA319	Contact Element Ball Point, 8,3mm Length, Metric
901312	Contact Element Ball Point, 7,3mm Length, Carbide, Metric

901312 : for 2046S-80
21AZA319 : for 2048S-10

For accessories and contact points, see end of dial indicators section.

mm

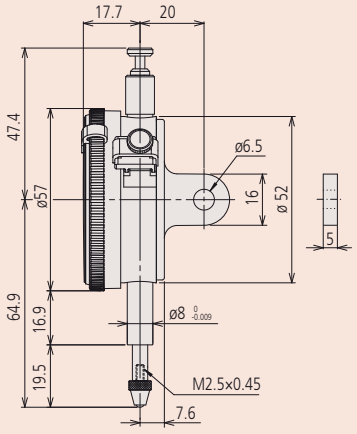

2048S-10

mm

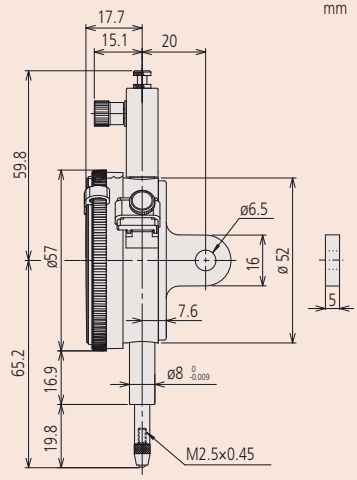

2046S-80

Series 2

This is a dial indicator with a special design that offers you the following benefits:
- Standard size
- Bezel Ø 57mm, Graduation 0,01

2048s-10

2046S-80

Metric

No.	No. with Lug back plate	Range [mm]	Range per rev.	Graduation	Scale	Measuring force [N]	Mass lug/plain [g]
2048SB-10	2048S-10	10	1 mm	0,01 mm	0-100 (100-0)	0,4 - 1,4	144/135
2046SB-80	2046S-80	10	1 mm	0,01 mm	0-100 (100-0)	0,4 - 5	158/149

No.	DIN 878 (1983)			EN ISO 463					
				Errors of indication over a range of					
	fe µm	fges µm	fu µm	Any 1/10 revolution µm	Any 1/2 revolution µm	Any 1 revolution µm	Range µm	Repeatability µm	Hysteresis error µm
2048SB-10	15	17	3	5	9	10	15	3	3
2046SB-80	12	15	3	5	9	10	15		

All products to be sold to commercial customers. Product illustrations are without obligation. Product descriptions, in particular any and all technical specifications, are only binding when explicitly agreed upon. For suggested retail prices, please refer to the separate price list.

One Revolution Dial Indicator Series 2

Series 2

This is a lightweight one revolution dial indicator that gives you error-free reading. The Metric One Revolution Dial Indicator offers you the following benefits:

- Limiting the pointer rotation to one revolution eliminates the reading errors that can occur with other dial indicators that use multiple pointer revolutions for a full stroke.
- Graduation 0,01mm/ 0,02mm

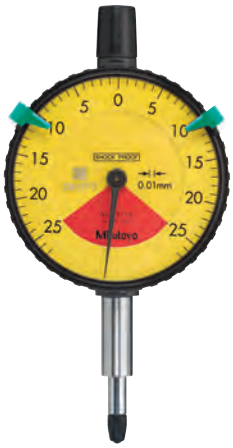

2971TB

2972TB

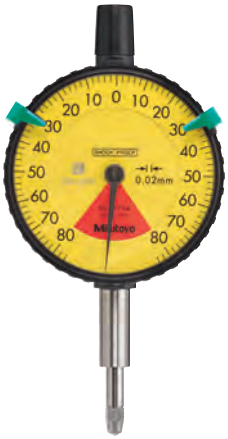

2973TB

Functions	Series 2 2971TB up to 2973TB
One revolution	●
Cushioned end point	●
IP52	●

Consumable spares

No.	Description
901312	Contact Element Ball Point, 7,3mm Length, Carbide, Metric

For accessories and contact points, see end of dial indicators section.

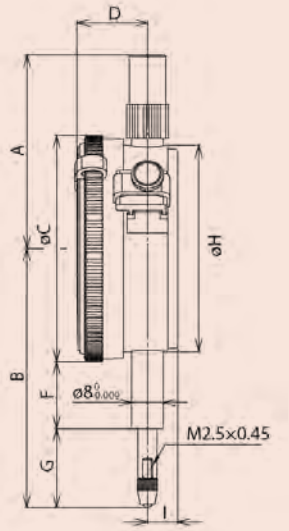

Metric

No.	Range	Range per rev.	Graduation	Scale	Measuring force [N]
2971TB	0,5 (plunger stroke: 3,5)	0,7 mm	0,01 mm	25-0-25	0,4 - 1,4
2972TB	1 (plunger stroke: 3,5)	1,4 mm	0,01 mm	50-0-50	0,4 - 1,4
2973TB	1,6 (plunger stroke: 3,5)	2 mm	0,02 mm	80-0-80	0,4 - 1,4

No.	Mass lug/plain [g]	A [mm]	B [mm]	C [mm]	D [mm]	F [mm]	G [mm]	H [mm]	I [mm]
2971TB	75	43,2	65,6	57	16,5	20,3	16,8	55	7,6
2972TB	75	43,2	66	57	16,5	20,3	17,2	55	7,6
2973TB	75	43,2	66,3	57	16,5	20,3	17,5	55	7,6

No.	DIN 878 (1983)			EN ISO 463					
				Errors of indication over a range of					
	fe µm	fges µm	fu µm	Any 1/10 revolution µm	Any 1/2 revolution µm	Any 1 revolution µm	Range µm	Repeatability µm	Hysteresis error µm
2971TB	8	11	3	5			7	3	3
2972TB	10	13	3	5			7	3	3
2973TB	15	19	4	8			16	5	4

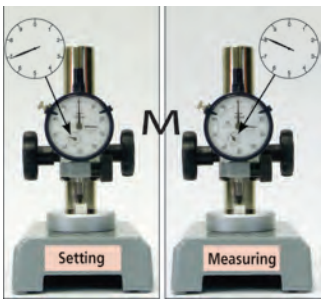

Should the workpiece be approx. 1 mm larger than the nominal dimension, the part is assessed as good if the smaller pointer is ignored.

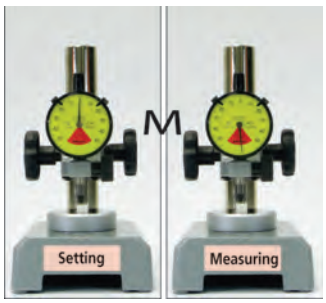

Fault-free identification of rejects.

All products to be sold to commercial customers. Product illustrations are without obligation. Product descriptions, in particular any and all technical specifications, are only binding when explicitly agreed upon. For suggested retail prices, please refer to the separate price list.

One Revolution Dial Indicator Series 2

Functions	Series 2		
	2928SB up to 2959SB	2929SB-62	2929SB-60
One revolution	●	●	●
Shockproof	●	●	●
IP64			●
IP52		●	

Consumable spares

No.	Description
901312	Contact Element Ball Point, 7,3mm Length, Carbide, Metric
902119	Contact Element Ball Point, 8,3mm Length, Waterproof Type, Metric
125317	NBR Rubber Boot, for ID-B, IP64 Series 2

902119 and 125317 : for 2929S-60 (IP model)

For accessories and contact points, see end of dial indicators section.

2959S

2928S

mm

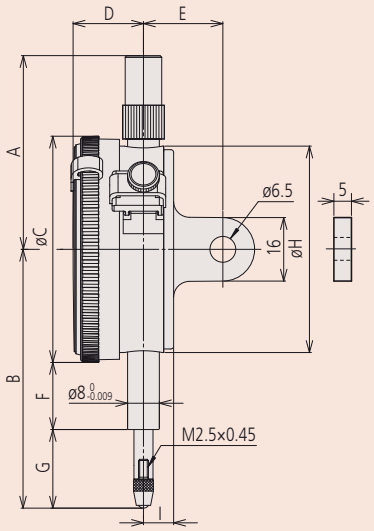

Series 2

This is a lightweight one revolution dial indicator that gives you error-free reading.
The One Revolution Type Metric Dial Indicator offers you the following benefits:

- Limiting the pointer rotation to one revolution eliminates the reading errors that can occur with other dial indicators that use multiple pointer revolutions for a full stroke.
- Graduation 0,01mm/ 0,1mm

2929S(B)-60

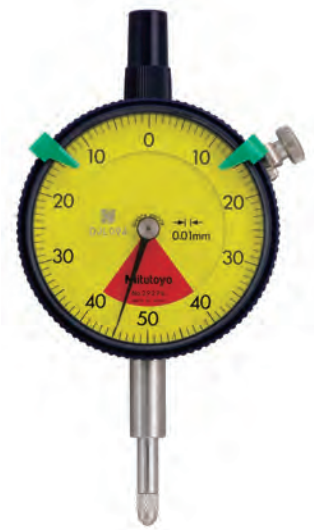

2929S

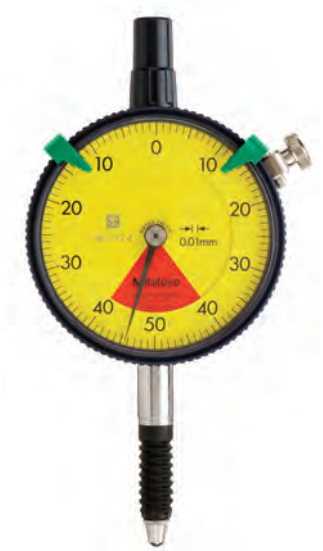

2929S-60

Metric

No.	No. with Lug back plate	Range	Range per rev.	Graduation	Scale	Measuring force [N]
2929SB	2929S	0,8 (plunger stroke: 5)	1 mm	0,01 mm	40-0-40	0,4 - 1,4
2929SB-60	2929S-60	0,8 (plunger stroke: 5)	1 mm	0,01 mm	40-0-40	0,4 - 2
2929SB-62	2929S-62	0,8 (plunger stroke: 5)	1 mm	0,01 mm	40-0-40	0,4 - 2
2959SB	2959S	1,6 (plunger stroke: 5)	2 mm	0,01 mm	80-0-80	0,4 - 1,4
2928SB	2928S	4 (plunger stroke: 10)	5 mm	0,1 mm	2-0-2	0,4 - 1,4

No.	Mass lug/plain [g]	A [mm]	B [mm]	C [mm]	D [mm]	E [mm]	F [mm]	G [mm]	H [mm]	I [mm]
2929SB	145/136	48,8	65,2	57	17,7	20	16,9	19,8	52	7,6
2929SB-60	146/137	48,8	70	57	17,7	20	12,3	29,2	52	7,6
2929SB-62	145/136	48,8	65,2	57	17,7	20	16,9	19,8	52	7,6
2959SB	145/136	48,8	65,2	57	17,7	20	16,9	19,8	52	7,6
2928SB	145/136	48,8	65,2	57	17,7	20	16,9	19,8	52	7,6

No.	DIN 878 (1983)			EN ISO 463					
				Errors of indication over a range of					
	fe µm	fges µm	fu µm	Any 1/10 revolution µm	Any 1/2 revolution µm	Any 1 revolution µm	Range µm	Repeatability µm	Hysteresis error µm
2929SB	7	10	3	5			7	3	3
2929SB-60	7	10	3	5			7	3	3
2929SB-62	7	10	3	5			7	3	3
2959SB	12	16	4	5			9	3	4
2928SB	40	50	5	15			25	20	12

All products to be sold to commercial customers. Product illustrations are without obligation. Product descriptions, in particular any and all technical specifications, are only binding when explicitly agreed upon. For suggested retail prices, please refer to the separate price list.

One Revolution Dial Indicator Series 2

Series 2

This is a lightweight one revolution dial indicator that gives you error-free reading.
The One Revolution Type Metric Dial Indicator offers you the following benefits:

- Limiting the pointer rotation to one revolution eliminates the reading errors that can occur with other dial indicators that use multiple pointer revolutions for a full stroke.
- Graduation 0,001mm

2900S(B)-70

2900S-10

2900S-70

2901S-10

Functions	Series 2		
	2900SB-10 2901SB-10	2900SB-72	2900SB-70
One revolution	●	●	●
Shockproof	●	●	●
Jeweled bearing	●	●	●
IP64			●
IP52		●	

Consumable spares

No.	Description
901312	Contact Element Ball Point, 7,3mm Length, Carbide, Metric
902119	Contact Element Ball Point, 8,3mm Length, Waterproof Type, Metric
125317	NBR Rubber Boot, for ID-B, IP64 Series 2

902119 and 125317 : for 2900S-70 (IP model)

For accessories and contact points, see end of dial indicators section.

mm

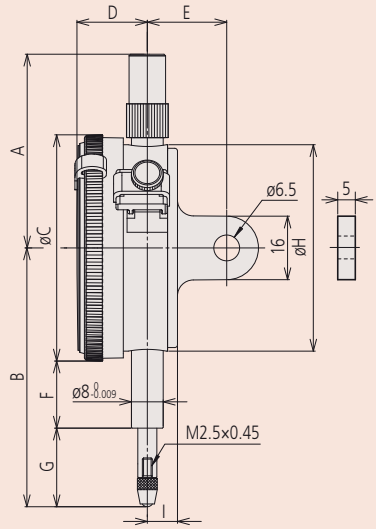

Metric

No.	No. with Lug back plate	Range	Range per rev.	Graduation	Scale	Measuring force [N]
2900SB-10	2900S-10	0,08 (plunger stroke: 4,5)	0,1 mm	0,001 mm	40-0-40	0,4 - 1,4
2900SB-70	2900S-70	0,08 (plunger stroke: 4,5)	0,1 mm	0,001 mm	40-0-40	0,4 - 2
2900SB-72	2901S-72	0,08 (plunger stroke: 4,5)	0,1 mm	0,001 mm	40-0-40	0,4 - 2
2901SB-10	2901S-10	0,16 (plunger stroke: 4,5)	0,2 mm	0,001 mm	80-0-80	0,4 - 1,4

No.	Mass lug/plain [g]	A [mm]	B [mm]	C [mm]	D [mm]	E [mm]	F [mm]	G [mm]	H [mm]	I [mm]
2900SB-10	149/140	48,8	66	57	17,7	20	16,9	20,6	52	7,6
2900SB-70	150/141	48,8	67	57	17,7	20	12,3	26,2	52	7,6
2900SB-72	149/140	48,8	66	57	17,7	20	16,9	20,6	52	7,6
2901SB-10	149/140	48,8	66,1	57	17,7	20	16,9	20,7	52	7,6

No.	DIN 878 (1983)			EN ISO 463					
				Errors of indication over a range of				Repeatability	Hysteresis error
	fe µm	fges µm	fu µm	Any 1/10 revolution µm	Any 1/2 revolution µm	Any 1 revolution µm	Range µm	µm	µm
2900SB-10	2	3	1,5	2			3	1	2
2900SB-70	2	3	1,5	2			3	1	2
2900SB-72	2	3	1,5	2			3	1	2
2901SB-10	3	4,5	1,5	2			4	1	2

All products to be sold to commercial customers. Product illustrations are without obligation. Product descriptions, in particular any and all technical specifications, are only binding when explicitly agreed upon. For suggested retail prices, please refer to the separate price list.

Dial Indicator Series 3

Functions	Series 3		
	3046SB	3047SB	3109SB-10
Balanced dial		●	●
Continuous dial	●		
Shockproof			●
Jeweled bearing			●

Consumable spares

No.	Description
901312	Contact Element Ball Point, 7,3mm Length, Carbide, Metric

For accessories and contact points, see end of dial indicators section.

mm

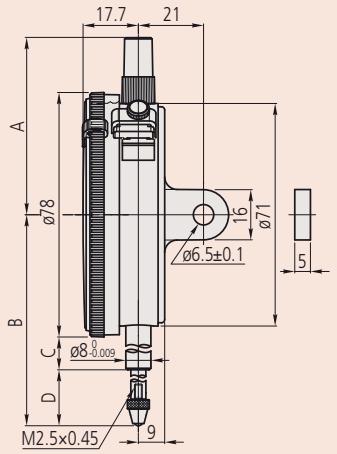

Series 3

This is a metric dial indicator that offers you the following benefits:
- Bezel ø 78mm.
- 10mm range with graduation 0,01mm and 1mm range with graduation 0,001mm.

3046S

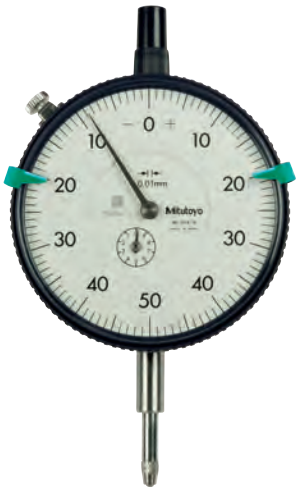
3047S

3109S-10

Metric

No.	No. with Lug back plate	Range [mm]	Range per rev.	Graduation	Scale	Measuring force [N]
3046SB	3046S	10	1 mm	0,01 mm	0-100 (100-0)	0,4 - 1,4
3047SB	3047S	10	1 mm	0,01 mm	0-50-0	0,4 - 1,4
3109SB-10	3109S-10	1	0,2 mm	0,001 mm	0-100-0	0,4 - 1,5

No.	Mass lug/plain [g]	A [mm]	B [mm]	C [mm]	D [mm]
3046SB	252/237	61,2	75,5	15,9	20,6
3047SB	252/237	61,2	75,5	15,9	20,6
3109SB-10	270/255	61,2	75,5	25,9	14,1

No.	DIN 878 (1983)			EN ISO 463					
				Errors of indication over a range of					
	fe µm	fges µm	fu µm	Any 1/10 revolution µm	Any 1/2 revolution µm	Any 1 revolution µm	Range µm	Repeatability µm	Hysteresis error µm
3046SB	15	17	3	5	9	10	15	3	3
3047SB	15	17	3	5	9	10	15	3	3
3109SB-10	3	5	2	2,5	4	4,5	5	1	2

All products to be sold to commercial customers. Product illustrations are without obligation. Product descriptions, in particular any and all technical specifications, are only binding when explicitly agreed upon. For suggested retail prices, please refer to the separate price list.

Dial Indicator with Large Diameter Scale Series 3

Series 3

This is a metric dial indicator that offers you the following benefits:
- Bezel ø 78mm.
- 20/30/50/80/100mm range with graduation 0,01mm

3050S

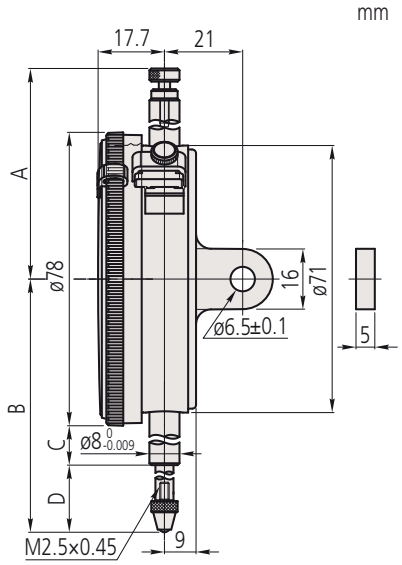

Functions	Series 3	
	3050SB	3052SB-19 up to 3062SB-19
Continuous dial	●	●
Shockproof		●
Jeweled bearing	●	●
Cushioned end point	●	
Coaxial revolution counter		●

Consumable spares

No.	Description
21AZA319	Contact Element Ball Point, 8,3mm Length, Metric
901312	Contact Element Ball Point, 7,3mm Length, Carbide, Metric

901312 : for 3050S
21AZA319 : for 3052S-19 / 3058S-19 / 3060S-19 / 3062S-19

For accessories and contact points, end of dial indicators section.

3058S-19

Metric

No.	No. with Lug back plate	Range [mm]	Range per rev.	Graduation	Scale	Measuring force [N]
3050SB	3050S	20	1 mm	0,01 mm	0-100 (100-0)	0,4 - 2
3052SB-19	3052S-19	30	1 mm	0,01 mm	0-100 (0-100)	0,4 - 2,5
3058SB-19	3058S-19	50	1 mm	0,01 mm	0-100 (100-0)	0,4 - 3
3060SB-19	3060S-19	80	1 mm*	0,01 mm	0-100 (0-100)	0,4 - 3
3062SB-19	3062S-19	100	1 mm*	0,01 mm	0-100 (100-0)	0,4 - 3,2

*3060S-19 and 3062S-19 : use in a vertical position only.

No.	Mass lug/plain [g]	A [mm]	B [mm]	C [mm]	D [mm]
3050SB	272/257	52,6	94	25,9	29,1
3052SB-19	285/270	72,9	104,3	25,9	39,4
3058SB-19	298/283	81,9	142,3	43,9	59,4
3060SB-19	314/299	120,9	202,3	73,9	89,4
3062SB-19	332/317	141,9	243,3	94,9	109,4

No.	DIN 878 (1983)			EN ISO 463					
				Errors of indication over a range of				Repeatability	Hysteresis error
	fe µm	fges µm	fu µm	Any 1/10 revolution µm	Any 1/2 revolution µm	Any 1 revolution µm	Range µm		
3050SB	25	30	4	8	10	11	20	3	4
3052SB-19	30	35	4	10	11	12	25	3	5
3058SB-19	50	55	5	10	12	13	30	3	6
3060SB-19	50	60	9	10	14	15	45	3	9
3062SB-19	60	75	13	12	17	20	50	3	9

All products to be sold to commercial customers. Product illustrations are without obligation. Product descriptions, in particular any and all technical specifications, are only binding when explicitly agreed upon. For suggested retail prices, please refer to the separate price list.

Dial Indicator Series 4

Functions	Series 4 4046SB
Continuous dial	●

Consumable spares

No.	Description
901312	Contact Element Ball Point, 7,3mm Length, Carbide, Metric

For accessories and contact points, see end of dial indicators section.

Series 4

– Bezel ø 92 mm

4046S

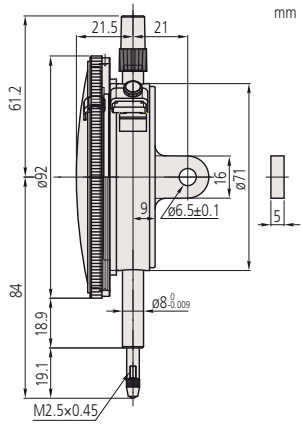

Metric

No.	No. with Lug back plate	Range [mm]	Range per rev.	Graduation	Scale	Measuring force [N]	Mass lug/plain [g]
4046SB	4046S	10	1 mm	0,01 mm	0-100 (100-0)	0,4 - 1,4	345/330

No.	DIN 878 (1983)			EN ISO 463					
				Errors of indication over a range of					
	fe µm	fges µm	fu µm	Any 1/10 revolution µm	Any 1/2 revolution µm	Any 1 revolution µm	Range µm	Repeatability µm	Hysteresis error µm
4046SB	15	16	3	5	9	10	15	3	3

All products to be sold to commercial customers. Product illustrations are without obligation. Product descriptions, in particular any and all technical specifications, are only binding when explicitly agreed upon. For suggested retail prices, please refer to the separate price list.

Dial Indicator Back Plunger Type Series 1

Series 1

This is a back plunger type dial indicator with bezel ø 39mm.

1960T

1160T

Functions	Series 1		
	1160T	1162T	1960T
Balanced dial			●
Continuous dial	●	●	
Reverse reading		●	
One revolution			●
Shockproof			●

Specifications

Delivered	Delivered with factory certificate

Optional accessories

No.	Description
136568	Holding Bar for Back Plunger Indicator, Ø8mm, 81mm Length
21AAA168	Holding Bar for Back Plunger Indicator, Ø8mm, 42mm Length
136567	Holding Bar for Back Plunger Indicator, Ø6mm, 81mm Length
21AAA166	Holding Bar for Back Plunger Indicator, Ø6mm, 42mm Length

Consumable spares

No.	Description
901312	Contact Element Ball Point, 7,3mm Length, Carbide, Metric
21AZA319	Contact Element Ball Point, 8,3mm Length, Metric

901312 : for 1960
21AZA319 : for 1160 and 1162

For accessories and contact points, see end of dial indicators section.

With optional holding bar

Metric

No.	Range	Range per rev.	Graduation	Scale	Measuring force [N]
1960T	1 (plunger stroke: 4,5)	1,27 mm	0,01 mm	50-0-50	0,4 - 1,4
1160T	5	1 mm	0,01 mm	0-100	0,4 - 1,4
1162T	5	1 mm	0,01 mm	100-0	0,4 - 1,4

No.	A [mm]	B [mm]	C [mm]	E [mm]	F [mm]	G [mm]	H [mm]	Mass [g]
1960T	40	22,1	35	22	28,7	12,8	46	80
1160T	40	22,1	35	22	25	13,8	43,3	80
1162T	40	22,1	35	22	25	13,8	43,3	80

No.	DIN 878 (1983)			EN ISO 463					
				Errors of indication over a range of					
	fe µm	fges µm	fu µm	Any 1/10 revolution µm	Any 1/2 revolution µm	Any 1 revolution µm	Range µm	Repeatability µm	Hysteresis error µm
1960T	12	15	3	7				3	3,5
1160T	15	19	4	7	11	12	18	3	4
1162T	15	19	4	7	11	12	18	3	4

Also available! Inch Models

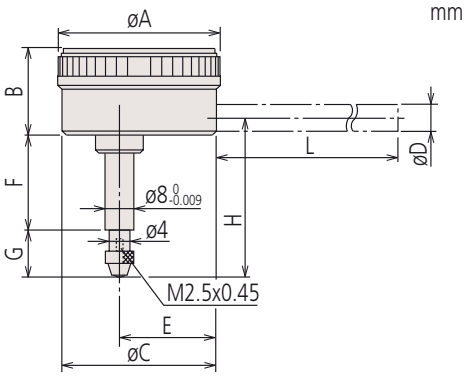

All products to be sold to commercial customers. Product illustrations are without obligation. Product descriptions, in particular any and all technical specifications, are only binding when explicitly agreed upon. For suggested retail prices, please refer to the separate price list.

Dial Indicator Back Plunger Type Series 2

Functions	Series 2 2960T	Series 2 2990T-10
One revolution	●	●
Shockproof	●	●
Jeweled bearing		●

Specifications

Delivered	Delivered with factory certificate

Optional accessories

No.	Description
136568	Holding Bar for Back Plunger Indicator, Ø8mm, 81mm Length
21AAA168	Holding Bar for Back Plunger Indicator, Ø8mm, 42mm Length
136567	Holding Bar for Back Plunger Indicator, Ø6mm, 81mm Length
21AAA166	Holding Bar for Back Plunger Indicator, Ø6mm, 42mm Length

Consumable spares

No.	Description
901312	Contact Element Ball Point, 7,3mm Length, Carbide, Metric
21AZA319	Contact Element Ball Point, 8,3mm Length, Metric

901312 : for 2990T-10
21AZA319 : for 2960T

For accessories and contact points, see end of dial indicators section.

With optional holding bar

Series 2

This is a back plunger type dial indicator with bezel ø 55 - 58mm

2990T-10

2960T

Metric

No.	Range	Range per rev.	Graduation	Scale	Measuring force [N]	Mass [g]
2990T-10	0,1 (plunger stroke: 4)	0,14 mm	0,001 mm	50-0-50	0,4 - 1,5	220
2960T	1 (plunger stroke: 4,5)	1,27 mm	0,01 mm	50-0-50	0,4 - 1,4	215

No.	DIN 878 (1983)			EN ISO 463					
				Errors of indication over a range of					
	fe µm	fges µm	fu µm	Any 1/10 revolution µm	Any 1/2 revolution µm	Any 1 revolution µm	Range µm	Repeatability µm	Hysteresis error µm
2990T-10	3	5	2	2			4	1	2
2960T	12	15	3	7			15	3	3,5

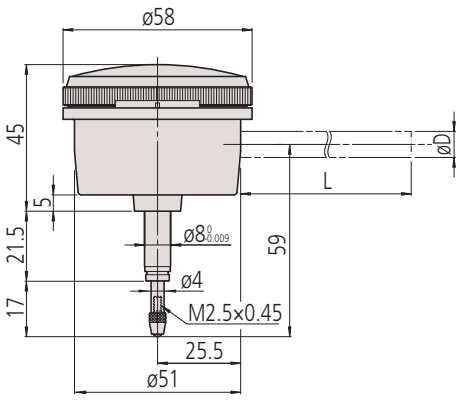

2990T-10

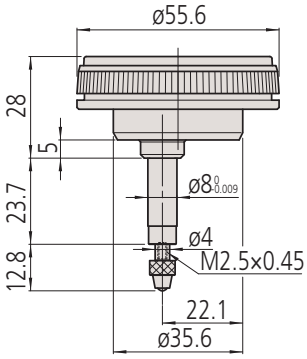

2960T

All products to be sold to commercial customers. Product illustrations are without obligation. Product descriptions, in particular any and all technical specifications, are only binding when explicitly agreed upon. For suggested retail prices, please refer to the separate price list.

Contact Points

Ball Point

902119

Metric

A: M2,5 x 0,45

L [mm]	Carbide	Carbide waterproof type	Plastic	Ruby	Sapphire
	No.	No.	No.	No.	No.
12,1	—	21AZA320	—	—	—
14	21JAA225	—	—	—	—
15	120049	—	—	120051	120050
17	21JAA224	—	—	—	—
19,3	—	21AZA321	—	—	—
20	137391	—	—	137392	—
22	21JAA226	—	—	—	—
25	120053	—	—	120055	120054
30	21AAA252	—	—	21AAA253	—
7,3	901312	—	901994	120047	—
8	120045	—	—	—	120046
8,3	21AZA319	902119	—	—	—

Also available! Inch Models

mm

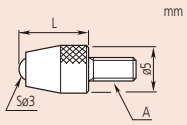

901312

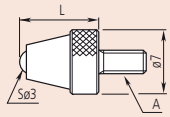

21AZA319

mm

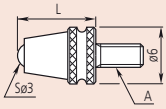

902119

mm

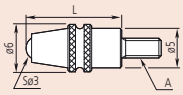

21AZA320

Ball Point

101122

Metric

A: M2,5 x 0,45

No.	Material	D Ø [mm]
21AAA349	Carbide	1
21AAA350	Carbide	1,5
101122	Steel	1,8
21AAA351	Carbide	2,5
21AAA352	Carbide	4

mm

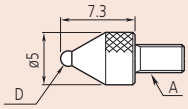

Shell Type Point - Steel

101118

Metric

A: M2,5 x 0,45

No.	L [mm]
101386	5
101118	10
137393	15
101387	20
101388	25
21AAA254	30

Also available! Inch Models

mm

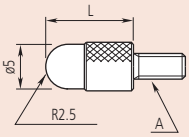

For all drawings
A = M 2,5 x 0,45 mm (metric)

All products to be sold to commercial customers. Product illustrations are without obligation. Product descriptions, in particular any and all technical specifications, are only binding when explicitly agreed upon. For suggested retail prices, please refer to the separate price list.

Contact Points

Conical Point

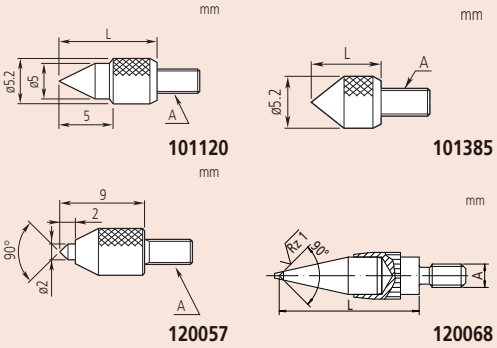

Metric

A: M2,5 x 0,45

No.	Material	Tip angle	L [mm]
101385	Steel	90°	5
101120	Steel	60°	10
120057	Carbide	90°	9
120068	Carbide	90°	15

101385

Needle Point - Steel

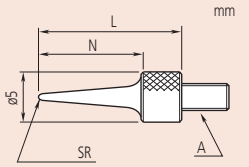

Metric

A: M2,5 x 0,45

No.	N [mm]	SR [mm]	L [mm]
101121	11	0,4	15
137413	13	0,2	17
21AAA255	21	0,4	25
21AAA256	31	0,4	35

101121

Also available! Inch Models

Cylinder Point - Carbide

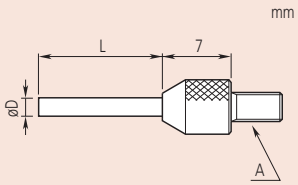

For all drawings
A = M 2,5 x 0,45 mm (metric)

Metric

A: M2,5 x 0,45

No.	L [mm]	D Ø [mm]
120066	3	0,45
21AAA329	5	0,45
120065	3	1
21AAA330	5	1
21AAA331	8	1
21AAA332	10	1
21AAA333	20	1
21AAA334	40	1
21AAA335	5	1,5
21AAA336	10	1,5
120064	13	1,5
21AAA337	20	1,5
21AAA338	40	1,5
137257	8	2
21AAA257	18	2
21AAA258	28	2
21AAA339	40	2

137257

All products to be sold to commercial customers. Product illustrations are without obligation. Product descriptions, in particular any and all technical specifications, are only binding when explicitly agreed upon. For suggested retail prices, please refer to the separate price list.

Contact Points

Spherical Point

120059

Metric A: M2,5 x 0,45

No.	Material	SR [mm]	L [mm]	D Ø [mm]
111460	Steel	5	3	5,5
120059	Carbide	7	10	7,5
125258	Steel	5	5	7,9
101119	Steel	7	5	10
120060	Carbide	10	10	10,5

Also available! Inch Models

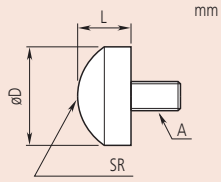

Steel

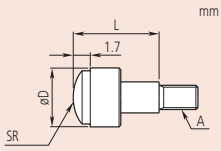

Carbide

Flat Point - Steel

131365

Metric A: M2,5 x 0,45

No.	Flatness [µm]	L [mm]	D Ø [mm]
131365	3	8	5
21AAA340	3	10	5
101117	5	10	10
21AAA341	5	10	15
21AAA342	5	10	20
21AAA343	5	10	25
21AAA344	5		30

Also available! Inch Models

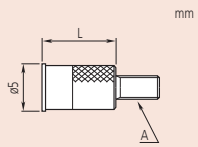

Flatness 3 µm

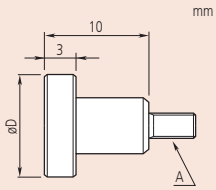

Flatness 5µm

Flat Point - Carbide

120056

Metric A: M2,5 x 0,45

No.	Flatness [µm]	L [mm]	D Ø [mm]	Ø d [mm]
120056	3	8	5	2
120041	3	5	5,2	4,3
120042	3	10	7	6,5
120043	3	10	10,5	9,5
21AAA345	5	10	17	15
21AAA346	5	10	22	20
21AAA347	5	10	27	25
21AAA348	5	10	32	30
137255		10	7	6,4
137399		10	9	8

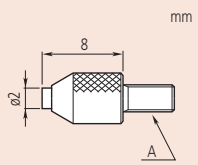

120056

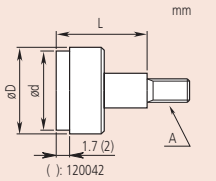

120041

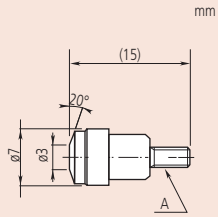

137255

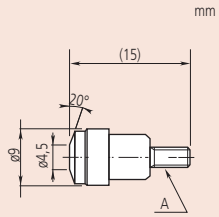

137399

For all drawings
A = M 2,5 x 0,45 mm (metric)

All products to be sold to commercial customers. Product illustrations are without obligation. Product descriptions, in particular any and all technical specifications, are only binding when explicitly agreed upon. For suggested retail prices, please refer to the separate price list.

Contact Points

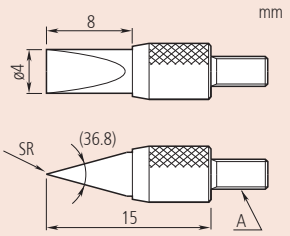

Knife Edge Point - Carbide

Metric A: M2,5 x 0,45

No.	SR [mm]
120067	0,2

120067

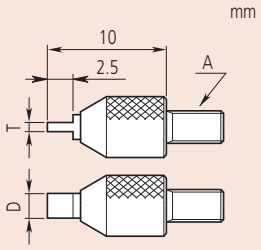

Blade Point - Carbide

Metric A: M2,5 x 0,45

No.	D [mm]	T [mm]
120061	2	0,4
120062	2	0,6
120063	4	1

120062

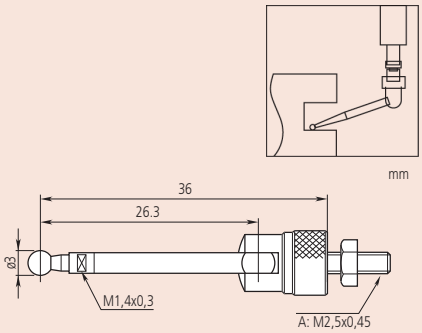

Lever Point - Steel

Metric A: M2,5 x 0,45

No.
900391

Also available! Inch Models

900391

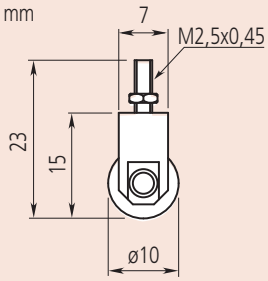

Roller Point - Steel

Metric A: M2,5 x 0,45

No.
901954

Also available! Inch Models

901954

For all drawings
A = M 2,5 x 0,45 mm (metric)

Standard accessories

No.	Description
131365	Contact Element Flat, 5mm, Steel, Metric
101117	Contact Element Flat, 10mm, Steel, Metric
101121	Contact Element Needle, R 0,4mm, Steel, Metric
101119	Contact Element Spherical, R 7mm, Steel, Metric
101118	Contact Element Shell, R 2,5mm, Steel, Metric
101387	Contact Element Shell, R 2,5mm, Steel, Metric

Interchangeable Contact Point Set

Metric A: M2,5 x 0,45

No.	Remarks
7822	Set with 6 contact points included

All products to be sold to commercial customers. Product illustrations are without obligation. Product descriptions, in particular any and all technical specifications, are only binding when explicitly agreed upon. For suggested retail prices, please refer to the separate price list.

Mitutoyo

Extension Rods

Steel Ø 5,2 mm

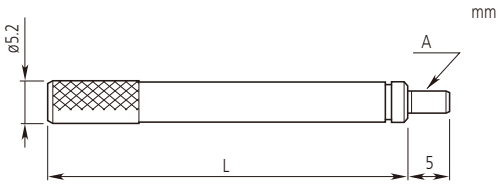

A = M 2,5 x 0,45 mm (metric)

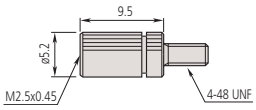

21AAA011
Adapter Metric

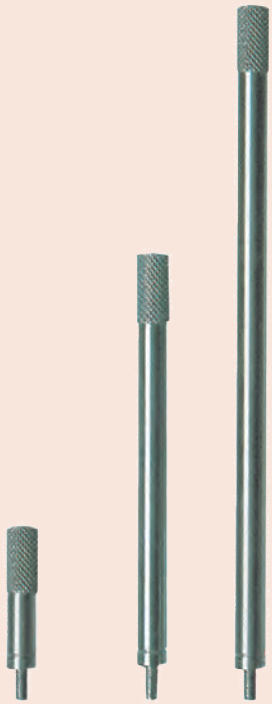

25 mm
21AAA259B

60 mm
304146

100 mm
303614

Metric

No.	L [mm]
303611	10
21AAA259A	15
303612	20
21AAA259B	25
303613	30
21AAA259C	35
21AAA259D	40
21AAA259E	45
21AAA259F	50
21AAA259G	55
304146	60
21AAA259H	65
21AAA259L	75
21AAA259J	70
21AAA259M	80
304147	90
303614	100

No.	Remarks	L
21AAA011	Adapter Inch/Metric	9,5 mm

Also available!
Inch Models

Bases for Indicators

Without screw

902162

902163

No.	Length [mm]
902162	63,5
902163	101,6

Optional accessories

No.	Description
21JAA269	Set Screw for Base (Indicator)

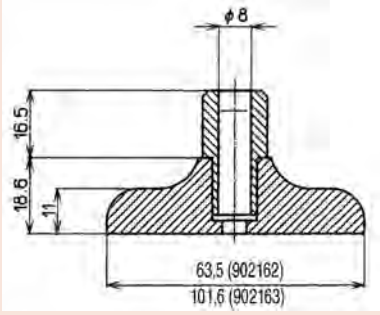

Thickness : 16 mm

All products to be sold to commercial customers. Product illustrations are without obligation. Product descriptions, in particular any and all technical specifications, are only binding when explicitly agreed upon. For suggested retail prices, please refer to the separate price list.

Interchangeable Backs

Flat Back Plate

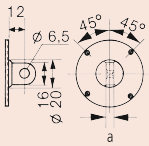

With centre lug

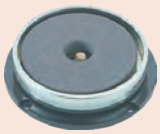
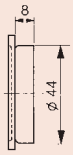

With magnet

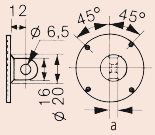

With laterally offset back lug

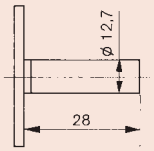

With post

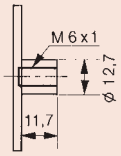

With threaded ring

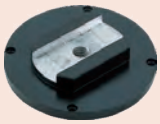
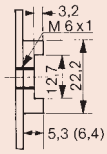

With adjustable stem

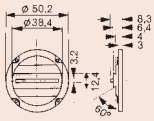

With rack

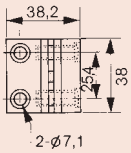

With rack and adjustable stem

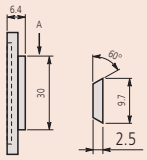

Back Plate with Dovetail

No.	Description	For Series	Dimensions [mm]
191559	Flat Back Plate	1 (1)	a = 1 mm
101211	Flat Back Plate	1	a = 2,2 mm
136872	Flat Back Plate	1 (waterproof)	a = 1,5 mm
137906	Flat Back Plate	1003	a = 1 mm
101039	Flat Back Plate	2/ ID-C/ ID-S/ ID-SS	a = 2,5 mm
21AZB231	Flat Back Plate	2 (waterproof S type)	a = 2,5 mm
100836	Flat Back Plate	3/ 4	a = 3 mm
190561	Back Plate with centre lug	1 (1)	a = 5 mm
101210	Back Plate with centre lug	1	a = 5 mm
137905	Back Plate with centre lug	for 1003	a = 5 mm
101040	Back Plate with centre lug	2/ ID-C/ ID-F/ ID-H/ ID-S/ ID-SS	a = 5 mm
21AZB230	Back Plate with centre lug	2 (waterproof S type)	a = 5 mm
100691	Back Plate with centre lug	3/ 4	a = 5 mm
21EZA145	Back Plate with centre lug	ID-N, ID-B, LGS(2)	5 mm
900928	Back Plate with magnet	2/ ID-C/ ID-F/ ID-H/ ID-S/ ID-SS	
900929	Back Plate with magnet	3/ 4	
101167	Back Plate with laterally offset back lug	2/ ID-C/ ID-F/ ID-H/ ID-S/ ID-SS	
100837	Back Plate with laterally offset back lug	3/ 4	
193172	Back Plate with post	1	
101169	Back Plate with post	2/ ID-C/ ID-F/ ID-H/ ID-S/ ID-SS	
100839	Back Plate with post	3/ 4	
193173	Back Plate with threaded ring	1	M 6 x 1
136023	Back Plate with threaded ring	2/ ID-C/ ID-F/ ID-H/ ID-S/ ID-SS	M 6 x 1
136024	Back Plate with threaded ring	3/ 4	M 6x 1
136025	Back Plate with adjustable stem	1	M 6 x 1
136026	Back Plate with adjustable stem	2/ ID-C/ ID-F/ ID-H/ ID-S/ ID-SS	M 6 x 1
136027	Back Plate with adjustable stem	3/ 4	M 6 x 1
129902	Back Plate with rack	2/ ID-C/ ID-F/ ID-H/ ID-S/ ID-SS	
901963	Back Plate set including rear lid with rack and adjustable stem	2/ ID-C/ ID-F/ ID-H/ ID-S/ ID-SS	
900008	Back Plate with Dovetail	2/ ID-C/ ID-F/ ID-H/ ID-S/ ID-SS	

(1) for 1911, 1913-10, 1921, 1923, 1925-10, 1927-10 (2) for LGS 575-303, 575-304, 575-313

For old indicator models, please contact Mitutoyo

All products to be sold to commercial customers. Product illustrations are without obligation. Product descriptions, in particular any and all technical specifications, are only binding when explicitly agreed upon. For suggested retail prices, please refer to the separate price list.

Spindle Lifting Accessories

– The spindle lifting lever is attached to the top end of the spindle for improved inspection efficiency when using a dial indicator mounted on a stand.

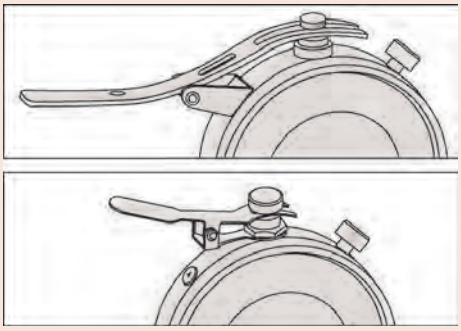

902100

21AZB149

21AZB150

902011

21EZA198

Spindle lifting cable

No.	Description
901975	With auto-stop function 300 mm length
540774	Without auto-stop function 500 mm length

No high grade IP-Protection (e.g. IP-64)

Spindle lifting handle

No.	Description
137693	Suitable for 4,8 mm spindle diameter

No high grade IP-Protection (e.g. IP-64)

Spindle lifting lever

No.	Use for
902100	S type Series 1 F type Series 2 (former model) (up to 5 mm range)
21AZB149	S type Series 2, 3 and 4 (up to 10 mm range)
21AZB150	S type Series 2 and 3 (from 10 mm up to 20 mm range)
21AZB151	S type No. 7322 / 7323
902011	ID-C: 543-280(B), 543-281(B), 543-282, 543-283(B)
21EZA198	Indicators ID-C (up to 12 mm range) ID-S, ID-SS

No high grade IP-Protection (e.g. IP-64)

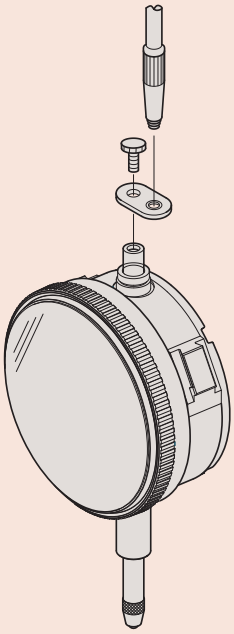

Sample application
for No. 901975

901975

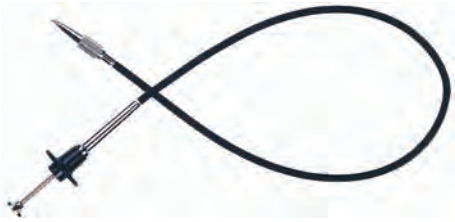

540774

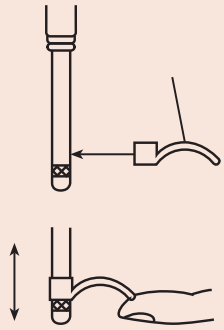

137693

137693

All products to be sold to commercial customers. Product illustrations are without obligation. Product descriptions, in particular any and all technical specifications, are only binding when explicitly agreed upon. For suggested retail prices, please refer to the separate price list.

Other Accessories for Dial Indicator

Colour-coded Spindle Caps

- 9 colour-coded spindle caps are available for dial indicators with a range of 10 mm or less.
- With the exception of 2971 / 2972 / 2973 / 2976 / 2977 / 2978.

Colour	Standard No.	Water-resistant No.
Black	193051	193595
Blue	193051B	193595B
Dark blue	193051S	193595S
Green	193051G	193595G
Orange	193051D	193595D
Pink	193051P	193595P
Red	193051R	193595R
White	193051W	193595W
Yellow	193051Y	193595Y

Plastic cover

- Protection against oil and splash water.
- For dial indicators Series 2.
- 10 pieces per set.

No.
902066

902066

Limit Stickers

- Tolerance markings.
- For dial indicators, Series 2 Ø 55,6 mm or 57 mm.
- 10 pieces per set.

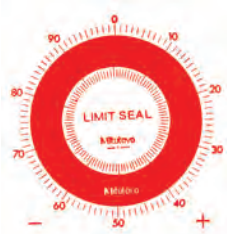

136420

136421

136422

No.	Colour
136420	Red
136421	Green
136422	Yellow

All products to be sold to commercial customers. Product illustrations are without obligation. Product descriptions, in particular any and all technical specifications, are only binding when explicitly agreed upon. For suggested retail prices, please refer to the separate price list.

Other Accessories for Dial Indicator

Crystal setter and assorted thrust pads

These crystal setters and thrust pads are used to make it easy to insert round dial glasses, and offer you the following benefits:
- You can use them to insert round dial glasses.
- Assorted thrust pads for diameters: 19,5/22,5/25,5/28,5/32,5/35/38/50mm.

7000

No.
7000

Tool set

- For repairing analogue dial indicators.

7823EU

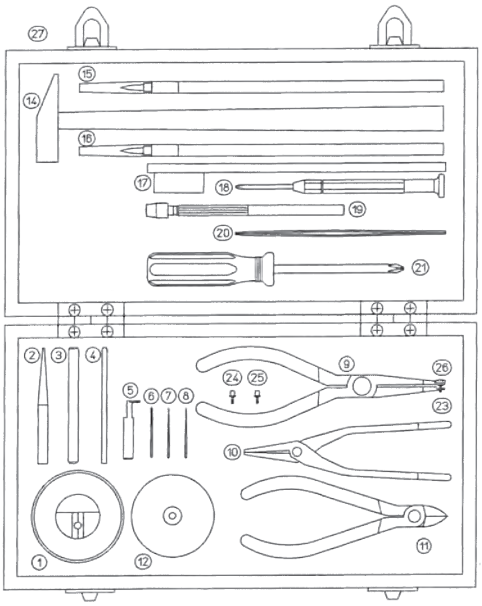

No.	Remarks
7823EU	Set with different tools included

Specifications

Delivered	In a wooden case

Standard accessories

No.	Description
129730	Spindle-Rest (V-Anvil)/7823
129732	Pin Remover/7823
129733	Punch/7823
129734	Metal Bearing Adjuster/7823
129735	Pinion Set/7823
129736	Reamer Ø1mm/7823
21JAA273	Reamer Ø0,5mm, 1/20 taper/7823
126628	Pointer removing tool/7823
901180	Pliers/7823
901179	Nippers/7823
129731	Pin rest/7823
901178	Hammer/7823
901177	Brush/7823
901176	Brush/7823
901174	Phillips & Plain Screwdrivers
901175	Pin-vise/7823
129729	Tweezers/7823
901173	Philips Screwdriver
126630	Pointer removing tip Ø0,8mm/7823
126630B	Hand Remover Pin 0,5mm 7823
126630C	Pointer removing tip Ø1,6mm/7823
100699	Adjustable Nut/7823
193702	Reamer Ø0,6mm/7823
21JAA314	Stick/7823

All products to be sold to commercial customers. Product illustrations are without obligation. Product descriptions, in particular any and all technical specifications, are only binding when explicitly agreed upon. For suggested retail prices, please refer to the separate price list.

Dial Test Indicator Lever Type

Lever Indicator Overview

Choices of dial position

Our product lineup offers four models, each with a different dial orientation on the frame to allow best readability in any situation.

- Horizontal type: standard model - with dial on the top of the frame
- Vertical type: dial on the end of the frame
- Horizontal (20° tilted face) type: dial on top of the frame, tilted backward by 20°
- Parallel type: dial on the side of the frame

Stylus length is on the dial face

The length of the applied stylus affects the indicator's scale factor.
The appropriate length is indicated on the dial face to assist a customer when ordering the correct replacement stylus.

ø8 stem to fit dovetails is a standard accessory

A ø8mm plain stem (21CAB104) for the Metric models that attaches to any dovetail on the frame is supplied as a standard accessory. Other sizes of stem to fit the dovetails are available as optional accessories:
ø4mm stem: 21CAB106
ø6mm stem: 21CAB103

Attachable limit hands

Limit hands (optional) can be attached to the bezel as for dial indicators, allowing easy identification of the upper and lower limits of tolerance.

Improved stylus bearing

The conventional method of mounting the stylus pivot bearing screw in the frame is prone to allowing looseness to develop with prolonged use.
A unique sub-plate structure to house this screw has now been incorporated in all models and eliminates this drawback.

All products to be sold to commercial customers. Product illustrations are without obligation. Product descriptions, in particular any and all technical specifications, are only binding when explicitly agreed upon. For suggested retail prices, please refer to the separate price list.

Lever Indicator Horizontal Type - 0,01 mm

Series 513

- Drastically enhanced durability, sensitivity and visibility.
- Glare-free flat crystal face allows easy reading of graduations.
- Preventing dust and oil from penetrating to the dial face. The O-ring seal on the bezel has the effect of providing smooth rotation and prevents dust and oil from penetrating through to the dial face.
- Multi-layer coatings on the Crystal.
- Hard and non-glare coatings on the crystal inhibit scratches, contamination and glare on the surface.
- Jewelled bearings and precision gears and pinions give you smooth, accurate movement and quick response.

513-466-10E

513-424-10E

513-414-10E

513-464-10E

513-404-10E

513-415-10E

513-426-10E

513-466-10E

513-424-10E

513-414-10E

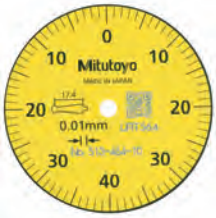

513-464-10E

513-404-10E

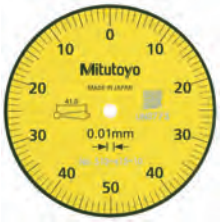

513-415-10E

513-426-10E

Functions	513-404-10E up to 513-474-10E	513-415-10E 513-477-10E	513-464-10E	513-414-10E	513-424-10E	513-466-10E	513-426-10E
Double scale spacing				●	●	●	●
Coaxial revolution counter							●
Compact type			●			●	
Long stylus		●		●			
Anti-magnet	●	●	●	●	●	●	●

Specifications

Contact point	Thread M 1,7 x 0,35

For optional accessories, see end of lever indicators section.

Optional accessories

No.	Description
21AAB363	Limit indicators, 2 pcs., for dial indicator and dial test indicator

All products to be sold to commercial customers. Product illustrations are without obligation. Product descriptions, in particular any and all technical specifications, are only binding when explicitly agreed upon. For suggested retail prices, please refer to the separate price list.

Lever Indicator Horizontal Type - 0,01 mm

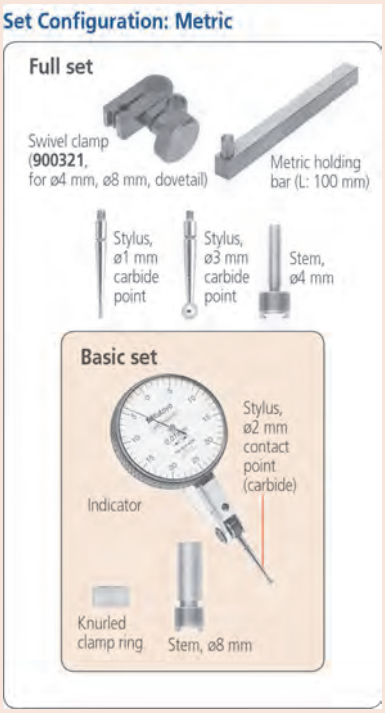

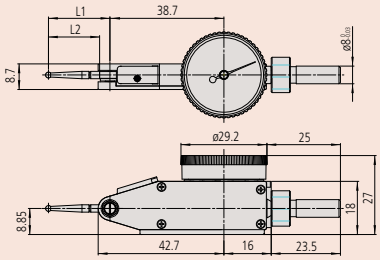

513-466-10E, 513-464-10E

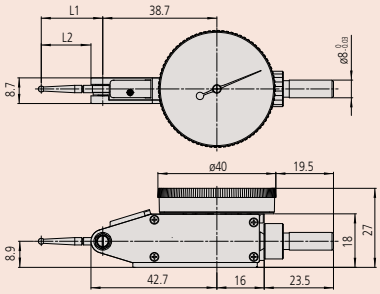

513-404-10E, 513-404-10T, 513-414-10E, 513-414-10T, 513-415-10E, 513-415-10T, 513-424-10E, 513-424-10T, 513-426-10E, 513-474-10E, 513-477-10E, 513-478-10E

Metric — Basic set

No.	Range [mm]	Graduation	Scale	Measuring force [N]	Carbide stylus tip ø2 mm No.	Ø D [mm]	L1 [mm]	L2 [mm]	Mass [g]
513-466-10E	0,5	0,01 mm	0-25-0	0,01-0,3	137557	29,2	22,2	18,7	41
513-424-10E	0,5	0,01 mm	0-25-0	0,01-0,3	137557	40	22,2	18,7	45
513-414-10E	0,5	0,01 mm	0-25-0	0,01-0,2	131324	40	37,4	33,9	45
513-464-10E	0,8	0,01 mm	0-40-0	0,01-0,3	103006	29,2	20,9	17,4	41
513-404-10E	0,8	0,01 mm	0-40-0	0,01-0,3	103006	40	20,9	17,4	45
513-415-10E	1	0,01 mm	0-50-0	0,01-0,2	136013	40	44,5	41	45
513-426-10E	1,5	0,01 mm	0-25-0	0,01-0,4	137557	40	22,2	18,7	45

Metric — Basic set - Ruby contact point

No.	Range [mm]	Graduation	Scale	Measuring force [N]	Ruby stylus tip ø2 mm No.	Ø D [mm]	L1 [mm]	L2 [mm]	Mass [g]
513-478-10E	0,5	0,01 mm	0-25-0	0,01-0,3	21CZA210	40	22,2	18,7	45
513-474-10E	0,8	0,01 mm	0-40-0	0,01-0,3	21CZA201	40	20,9	17,4	45
513-477-10E	1	0,01 mm	0-50-0	0,01-0,3	21CZA211	40	44,5	41	45

Metric — Full set

No.	Range [mm]	Graduation	Scale	Measuring force [N]	Carbide stylus tip ø2 mm No.	Ø D [mm]	L1 [mm]	L2 [mm]	Mass [g]
513-424-10T	0,5	0,01 mm	0-25-0	0,01-0,3	137557	40	22,2	18,7	45
513-414-10T	0,5	0,01 mm	0-25-0	0,01-0,2	131324	40	37,4	33,9	45
513-404-10T	0,8	0,01 mm	0-40-0	0,01-0,3	103006	40	20,9	17,4	45
513-415-10T	1	0,01 mm	0-50-0	0,01-0,2	136013	40	44,5	41	45

No.	DIN 2270 (2016)				EN ISO 9493 (2010)					
	Error oft indication over a range of				Error oft indication over a range of					
	any 10 scale divisions	measuring range	Hysteresis	Repeatability	any 10 scale divisions	any half revolution	any one revolution	measuring range	Hysteresis	Repeatability
513-466-10E	5	5	3	3	5			5	3	3
513-424-10E	5	5	3	3	5			5	3	3
513-414-10E	5	10	4	3	5			10	4	3
513-464-10E	5	8	3	3	5	6		8	3	3
513-404-10E	5	8	3	3	5	6		8	3	3
513-415-10E					5	8		10	4	3
513-426-10E					5		10	16	4	3
513-478-10E	5	5	3	3	5			5	3	3
513-474-10E	5	8	3	3	5	6		8	3	3
513-477-10E					5	8		10	4	3
513-424-10T	5	5	3	3	5			5	3	3
513-414-10T	5	10	4	3	5			10	4	3
513-404-10T	5	8	3	3	5	6		8	3	3
513-415-10T					5	8		10	4	3

All products to be sold to commercial customers. Product illustrations are without obligation. Product descriptions, in particular any and all technical specifications, are only binding when explicitly agreed upon. For suggested retail prices, please refer to the separate price list.

Mitutoyo

Lever Indicator - Horizontal Type - 0.001/0,002 mm

Series 513

- Drastically enhanced durability, sensitivity and visibility.
- Glare-free flat crystal face allows easy reading of graduations.
- Preventing dust and oil from penetrating to the dial face. The O-ring seal on the bezel has the effect of providing smooth rotation and prevents dust and oil from penetrating through to the dial face.
- Multi-layer coatings on the Crystal.
- Hard, antifouling and non-glare coatings on the crystal inhibit scratches, contamination and glare on the surface.
- Jewelled bearings and precision gears and pinions give you smooth, accurate movement and quick response.

513-401-10E

513-465-10E

513-405-10E

513-425-10E

513-401-10E

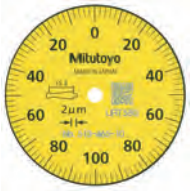

513-465-10E

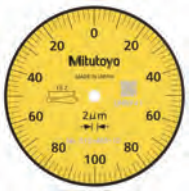

513-405-10E

513-425-10E

Metric — Basic set

No.	Range [mm]	Graduation	Scale	Measuring force [N]	Carbide stylus tip ø2 mm No.	Ø D [mm]	L1 [mm]	L2 [mm]	Mass [g]
513-401-10E	0,14	0,001 mm	0-70-0	0,01-0,3	103010	40	14,7	11,2	45
513-465-10E	0,2	0,002 mm	0-100-0	0,01-0,3	103011	29,2	18,7	15,2	41
513-405-10E	0,2	0,002 mm	0-100-0	0,01-0,3	103011	40	18,7	15,2	45
513-425-10E	0,6	0,002 mm	0-100-0	0,01-0,4	103011	40	18,7	15,2	45

Metric — Basic set - Ruby contact point

No.	Range [mm]	Graduation	Scale	Measuring force [N]	Ruby stylus tip ø2 mm No.	Ø D [mm]	L1 [mm]	L2 [mm]	Mass [g]
513-475-10E	0,2	0,002 mm	0-100-0	0,01-0,3	21CZB068	40	18,7	15,2	45

Metric — Full set

No.	Range [mm]	Graduation	Scale	Measuring force [N]	Carbide stylus tip ø2 mm No.	Ø D [mm]	L1 [mm]	L2 [mm]	Mass [g]
513-405-10T	0,2	0,002 mm	0-100-0	0,01-0,3	103011	40	18,7	15,2	45

No.	DIN 2270 (2016)				EN ISO 9493 (2010)					
	Error oft indication over a range of				Error oft indication over a range of					
	any 10 scale divisions	measuring range	Hysteresis	Repeatability	any 10 scale divisions	any half revolution	any one revolution	measuring range	Hysteresis	Repeatability
513-401-10E					2	3		3	2	1
513-465-10E	2	3	2	1	2	3		3	2	1
513-405-10E	2	3	2	1	2	3		3	2	1
513-425-10E					2	3	5	7	4	1
513-475-10E	2	3	2	1	2	3		3	2	1
513-405-10T	2	3	2	1	2	3		3	2	1

Functions	Series 513: 513-401-10E up to 513-475-10E	513-465-10E	513-425-10E
Coaxial revolution counter			●
Compact type		●	
Anti-magnet	●	●	●

Specifications

Contact point	Thread M 1,7 x 0,35

For optional accessories, see end of lever indicators section.

Optional accessories

No.	Description
21AAB363	Limit indicators, 2 pcs., for dial indicator and dial test indicator

Set Configuration: Metric

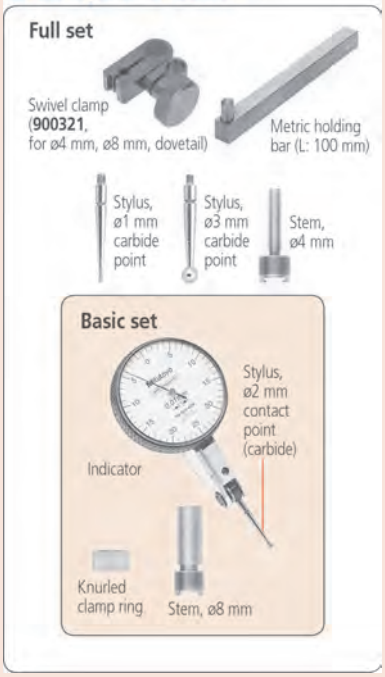

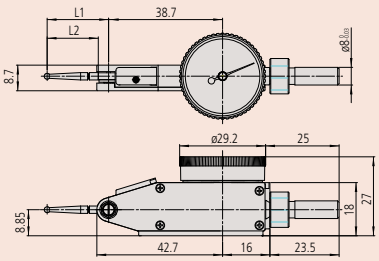

513-465-10E

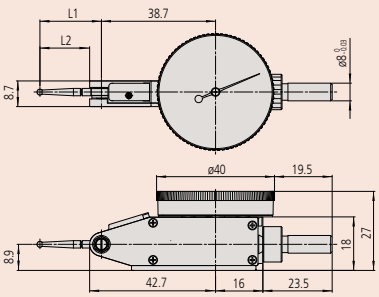

513-401-10E, 513-405-10E, 513-425-10E, 513-475-10E

All products to be sold to commercial customers. Product illustrations are without obligation. Product descriptions, in particular any and all technical specifications, are only binding when explicitly agreed upon. For suggested retail prices, please refer to the separate price list.

Lever Indicator and Magnet Stand

Series 513

513-908-10E

Indicator
Centered, bi-directional action for automatic reversal of measuring direction.
Jewelled bearings and precision gears and pinions for smooth, accurate movement and quick response.

Stand
Magnetic force : 150 N.
Mass : 180 g.

513-908-10E

Metric

No.	Contents include	Mass [g]
513-908-10E	**513-404-10E** : Lever Indicator **7014-10** : Mini Magnetic Stand **902804** : Stem with knurled clamp ring	222

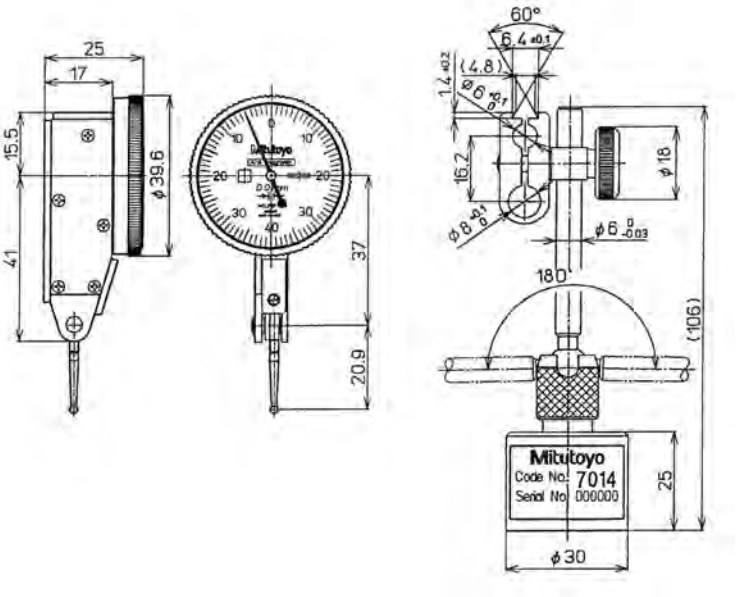

All products to be sold to commercial customers. Product illustrations are without obligation. Product descriptions, in particular any and all technical specifications, are only binding when explicitly agreed upon. For suggested retail prices, please refer to the separate price list.

Lever Indicator Horizontal (20° Tilted Face) Type

Series 513

- Drastically enhanced durability, sensitivity and visibility.
- Glare-free flat crystal face allows easy reading of graduations.

513-445-10E

513-445-10E

513-444-10E

513-444-10E

Functions	Series 513 513-444-10E up to 513-445-10T
Coaxial revolution counter	●
Anti-magnet	●

Specifications

Contact point	Thread M 1,7 x 0,35

For optional accessories, see end of lever indicators section.

Optional accessories

No.	Description
21AAB363	Limit indicators, 2 pcs., for dial indicator and dial test indicator

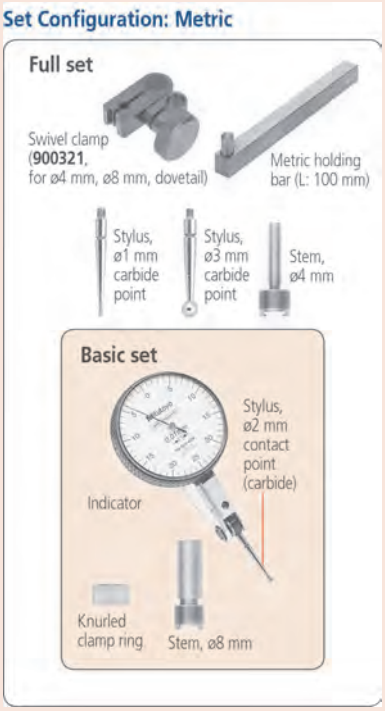

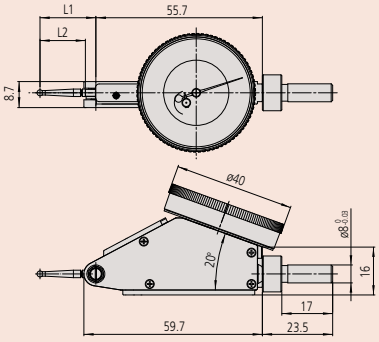

Metric — Basic set

No.	Range [mm]	Graduation	Scale	Measuring force [N]	Carbide stylus tip ø2 mm No.	L1 [mm]	L2 [mm]	Mass [g]
513-445-10E	0,4	0,002 mm	0-100-0	0,01-0,3	103011	18,7	15,2	48
513-444-10E	1,6	0,01 mm	0-40-0	0,01-0,3	103006	20,9	17,4	48

Metric — Full set

No.	Range [mm]	Graduation	Scale	Measuring force [N]	Carbide stylus tip ø2 mm No.	L1 [mm]	L2 [mm]	Mass [g]
513-445-10T	0,4	0,002 mm	0-100-0	0,01-0,3	103011	18,7	15,2	48
513-444-10T	1,6	0,01 mm	0-40-0	0,01-0,3	103006	20,9	17,4	48

No.	DIN 2270 (2016)				EN ISO 9493 (2010)					
	Error oft indication over a range of				Error oft indication over a range of					
	any 10 scale divisions	measuring range	Hysteresis	Repeatability	any 10 scale divisions	any half revolution	any one revolution	measuring range	Hysteresis	Repeatability
513-445-10E					2	3	5	6	4	1
513-444-10E	5	16	4	3	5	8	10	16	4	3
513-445-10T					2	3	5	6	4	1
513-444-10T	5	16	4	3	5	8	10	16	4	3

All products to be sold to commercial customers. Product illustrations are without obligation. Product descriptions, in particular any and all technical specifications, are only binding when explicitly agreed upon. For suggested retail prices, please refer to the separate price list.

Lever Indicator Vertical Type

Series 513

- Drastically enhanced durability, sensitivity and visibility.
- Glare-free flat crystal face allows easy reading of graduations.

Functions	Series 513: 513-454-10E up to 513-455-10T
Anti-magnet	●

Specifications

Contact point	Thread M 1,7 x 0,35

For optional accessories, see end of lever indicators section.

Optional accessories

No.	Description
21AAB363	Limit indicators, 2 pcs., for dial indicator and dial test indicator

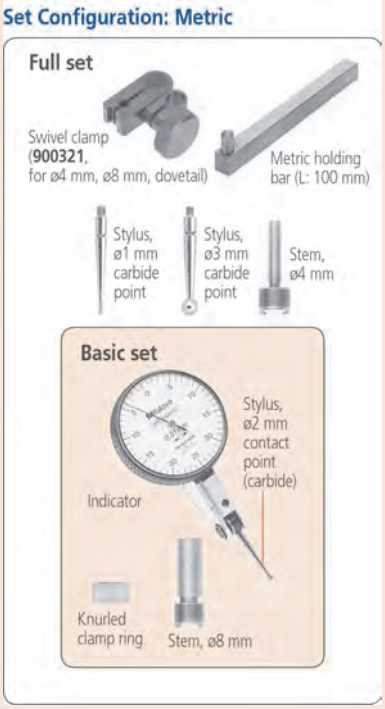

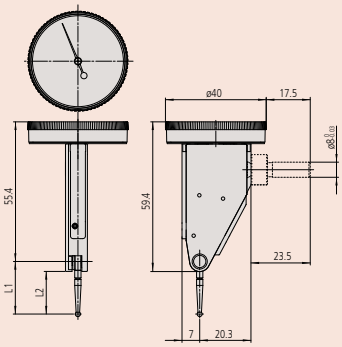

513-455-10E

513-455-10E

513-454-10E

513-454-10E

Metric Basic set

No.	Range [mm]	Graduation	Scale	Measuring force [N]	Carbide stylus tip ø2 mm No.	L1 [mm]	L2 [mm]	Mass [g]
513-455-10E	0,2	0,002 mm	0-100-0	0,01-0,3	103011	18,7	15,2	46
513-454-10E	0,8	0,01 mm	0-40-0	0,01-0,3	103006	20,9	17,4	46

Metric Full set

No.	Range [mm]	Graduation	Scale	Measuring force [N]	Carbide stylus tip ø2 mm No.	L1 [mm]	L2 [mm]	Mass [g]
513-455-10T	0,2	0,002 mm	0-100-0	0,01-0,3	103011	18,7	15,2	46
513-454-10T	0,8	0,01 mm	0-40-0	0,01-0,3	103006	20,9	17,4	46

No.	DIN 2270 (2016)				EN ISO 9493 (2010)					
	Error oft indication over a range of				Error oft indication over a range of					
	any 10 scale divisions	measuring range	Hysteresis	Repeatability	any 10 scale divisions	any half revolution	any one revolution	measuring range	Hysteresis	Repeatability
513-455-10E	2	3	2	1	2	3		3	2	1
513-454-10E	5	8	3	3	5	6		8	3	3
513-455-10T	2	3	2	1	2	3		3	2	1
513-454-10T	5	8	3	3	5	6		8	3	3

All products to be sold to commercial customers. Product illustrations are without obligation. Product descriptions, in particular any and all technical specifications, are only binding when explicitly agreed upon. For suggested retail prices, please refer to the separate price list.

Lever Indicator Parallel Type

Series 513

- Drastically enhanced durability, sensitivity and visibility.
- Glare-free flat crystal face allows easy reading of graduations.

513-484-10E

513-484-10E

Metric — Basic set

No.	Range [mm]	Graduation	Scale	Measuring force [N]	Carbide stylus tip ø2 mm No.	L1 [mm]	L2 [mm]	Mass [g]
513-484-10E	0,8	0,01 mm	0-40-0	0,01-0,3	103006	20,9	17,4	53

Metric — Full set

No.	Range [mm]	Graduation	Scale	Measuring force [N]	Carbide stylus tip ø2 mm No.	L1 [mm]	L2 [mm]	Mass [g]
513-484-10T	0,8	0,01 mm	0-40-0	0,01-0,3	103006	20,9	17,4	53

No.	DIN 2270 (2016)				EN ISO 9493 (2010)					
	Error oft indication over a range of				Error oft indication over a range of					
	any 10 scale divisions	measuring range	Hysteresis	Repeatability	any 10 scale divisions	any half revolution	any one revolution	measuring range	Hysteresis	Repeatability
513-484-10E	5	8	3	3	5	6		8	3	3
513-484-10T	5	8	3	3	5	6		8	3	3

Functions	Series 513 513-484-10E 513-484-10T
Anti-magnet	●

Specifications

Contact point	Thread M 1,7 x 0,35

For optional accessories, see end of lever indicators section.

Optional accessories

No.	Description
21AAB363	Limit indicators, 2 pcs., for dial indicator and dial test indicator

Set Configuration: Metric

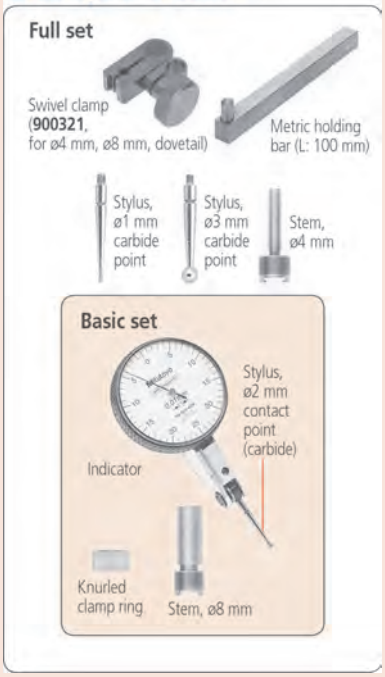

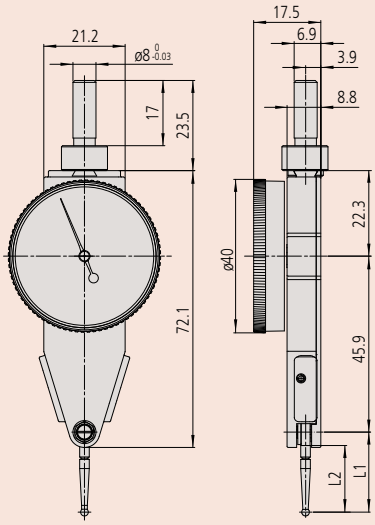

All products to be sold to commercial customers. Product illustrations are without obligation. Product descriptions, in particular any and all technical specifications, are only binding when explicitly agreed upon. For suggested retail prices, please refer to the separate price list.

Lever Indicator Universal Type

Functions	Series 513 513-304GE
Jeweled bearing	

Specifications

Contact point	Thread M 1,4 x 0,3

For optional accessories, see end of lever indicators section.

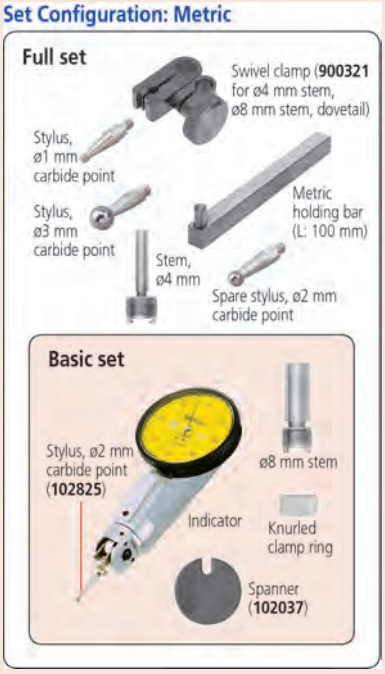

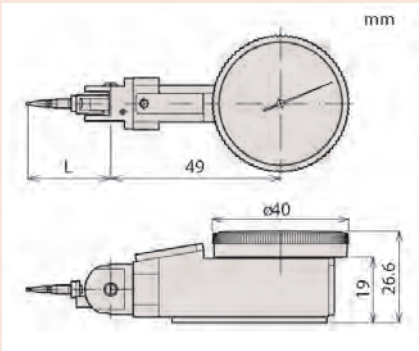

Series 513

This level indicator makes reading much easier as you can rotate its measuring head through 360°.

- Centered, bi-directional action for automatic reversal of measuring direction.
- Jewelled bearings and precision gears and pinions for smooth, accurate movement and quick response.

513-304GE

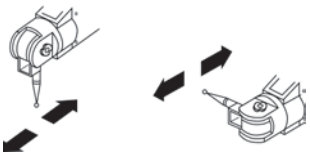

Stylus can be set at any angle while keeping the dial stationary

Metric — Basic set

No.	Range [mm]	Graduation	Scale	Measuring force [N]	Carbide stylus tip ø2 mm No.	L [mm]	Mass [g]
513-304GE	0,8	0,01 mm	0-40-0	≤ 0,3	102825	24	80

Metric — Full set

No.	Range [mm]	Graduation	Scale	Measuring force [N]	Carbide stylus tip ø2 mm No.	L [mm]	Mass [kg]
513-304GT	0,8	0,01 mm	0-40-0	≤ 0,3	102825	24	80

No.	DIN 2270 (2016)				EN ISO 9493 (2010)					
	Error oft indication over a range of				Error oft indication over a range of					
	any 10 scale divisions	measuring range	Hysteresis	Repeatability	any 10 scale divisions	any half revolution	any one revolution	measuring range	Hysteresis	Repeatability
513-304GE	5	8	3	3	5	6		8	3	3
513-304GT	5	8	3	3	5	6		8	3	3

Also available! Inch Models

All products to be sold to commercial customers. Product illustrations are without obligation. Product descriptions, in particular any and all technical specifications, are only binding when explicitly agreed upon. For suggested retail prices, please refer to the separate price list.

Mitutoyo

Lever Indicator Small Type

Series 513

This is a small type of metric lever indicator that offers you the following benefits:
- The switch lever allows you to change the measuring direction.
- A rotatable scale enables easy zero setting.
- Jewelled bearings and precision gears and pinions give you smooth, accurate movement and quick response.

513-501E

513-514E

513-527E

513-517WE

Metric — Basic set

No.	Range [mm]	Graduation	Scale	Measuring force [N]	Carbide stylus tip ø2 mm No.	C [mm]	L1 [mm]	L2 [mm]	Mass [g]
513-501E	0,14	0,001 mm	0-70-0	≤ 0,4	136104	41,1	12,1	8,6	41
513-503E	0,2	0,002 mm	0-100-0	≤ 0,4	103010	43,7	14,7	11,2	41
513-514E	0,5	0,01 mm	0-25-0	≤ 0,3	131324	66,8	36,8		41
513-517E	0,8	0,01 mm	0-40-0	≤ 0,3	103006	49,9	20,9	17,4	41
513-517WE	0,8	0,01 mm	0-40-0	≤ 0,3	21CZA097	49,9	20,9	17,4	41
513-527E	0,8	0,01 mm	0-40-0	≤ 0,3	103010		14,7	11,2	36

Metric — Full set

No.	Range [mm]	Graduation	Scale	Measuring force [N]	Carbide stylus tip ø2 mm No.	C [mm]	L1 [mm]	L2 [mm]	Mass [g]
513-501T	0,14	0,001 mm	0-70-0	≤ 0,4	136104	41,1	12,1	8,6	41
513-503T	0,2	0,002 mm	0-100-0	≤ 0,4	103010	43,7	14,7	11,2	41
513-514T	0,5	0,01 mm	0-25-0	≤ 0,3	131324	66,8	36,8		41
513-517T	0,8	0,01 mm	0-40-0	≤ 0,3	103006	49,9	20,9	17,4	41
513-517WT	0,8	0,01 mm	0-40-0	≤ 0,3	21CZA097	49,9	20,9	17,4	41
513-527T	0,8	0,01 mm	0-40-0	≤ 0,3	103010		14,7	11,2	36
513-515T	1	0,01 mm	0-50-0	≤ 0,3	136013	73,5	44,5	41	41

Functions	Series 513: 513-517WE 513-517WT	513-514E up to 513-515T	513-527T	513-527E
Jeweled bearing				●
Compact type			●	●
Long stylus		●		
Dustproof	●			

Specifications

Contact point	Thread M 1,7 x 0,35

For optional accessories, see end of lever indicators section.

Set Configuration: Metric

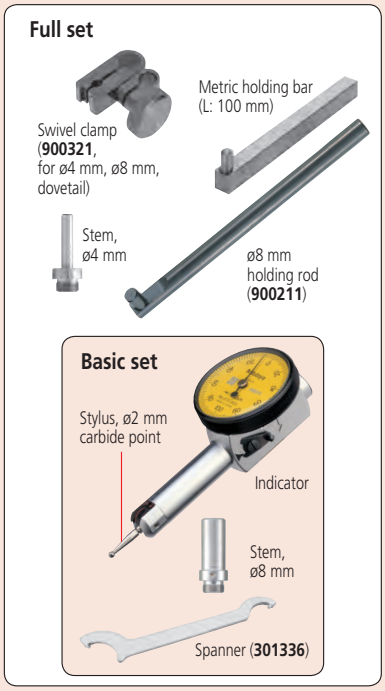

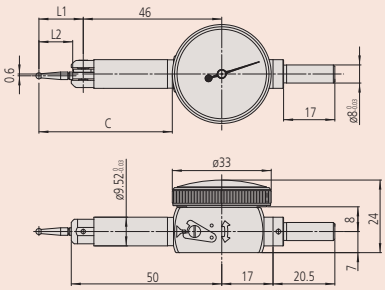

513-501E, 513-501T, 513-503T, 513-514E, 513-514T, 513-515T, 513-517T

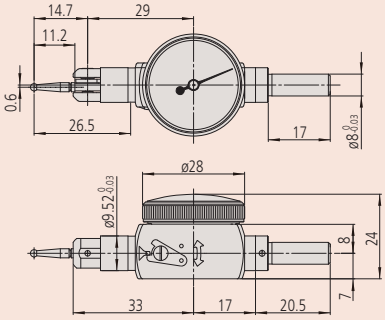

513-527

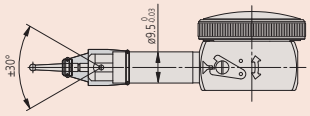

The stylus angle should be restricted within the range ±30° (as shown above) for dustproof models 513-517WE/T.

All products to be sold to commercial customers. Product illustrations are without obligation. Product descriptions, in particular any and all technical specifications, are only binding when explicitly agreed upon. For suggested retail prices, please refer to the separate price list.

Lever Indicator Small Type

No.	DIN 2270 (2016)				EN ISO 9493 (2010)					
	Error oft indication over a range of		Hysteresis	Repeatability	Error oft indication over a range of				Hysteresis	Repeatability
	any 10 scale divisions	measuring range			any 10 scale divisions	any half revolution	any one revolution	measuring range		
513-501E					2	3		3	2	1
513-503E	2	3	2	1	2	3		3	2	1
513-514E	5	10	4	3	5			10	4	3
513-517E	5	8	3	3	5	6		8	3	3
513-517WE	5	8	3	3	5	6		8	3	3
513-527E	5	8	3	3	5	6		8	3	3
513-501T	2	3	2	1	2	3		3	2	1
513-503T	2	3	2	1	2	3		3	2	1
513-514T	5	10	4	3	5			10	4	3
513-517T	5	8	3	3	5	6		8	3	3
513-517WT	5	8	3	3	5	6		8	3	3
513-527T	5	8	3	3	5	6		8	3	3
513-515T	5	10	4	3	5	8		10	4	3

All products to be sold to commercial customers. Product illustrations are without obligation. Product descriptions, in particular any and all technical specifications, are only binding when explicitly agreed upon. For suggested retail prices, please refer to the separate price list.

Mitutoyo

Styli, Stems and Holders

Stylus length affects the scale factor of an indicator, and the styli provided to you as standard give a scale factor of unity.

ø 0,5 mm ball-point

ø 0,7 mm ball-point

ø 1 mm ball-point Carbide

ø 2 mm ball-point Carbide

ø 2 mm ball-point Ruby

ø 3 mm ball-point Carbide

Styli (for Metric Models)

No.	Standard models	Small type models	L2 [mm]	Ø ball point
190547	●	●	11,2	0,5 mm steel
190549	●	●	17,4	0,5 mm steel
190654	●		18,7	0,5 mm steel
190656	●	●	41	0,5 mm steel
190548	●	●	11,2	0,7 mm steel
190550	●	●	17,4	0,7 mm steel
190653	●		18,7	0,7 mm steel
190655	●	●	41	0,7 mm steel
136756		●	8,6	1 mm carbide
21CZA044	●		9,4	1 mm carbide
103017	●	●	11,2	1 mm carbide
131314	●		15,2	1 mm carbide
103013	●	●	17,4	1 mm carbide
21CZA098		●	17,4	1 mm carbide*3
137558	●		18,7	1 mm carbide
102824	●		6,5	1 mm carbide*2
131316	●		33,9	1 mm carbide
136235	●	●	41	1 mm carbide
136104		●	8,6	2 mm carbide
21CZA036	●		9,4	2 mm carbide
103010	●	●	11,2	2 mm carbide
103011	●		15,2	2 mm carbide
103006	●	●	17,4	2 mm carbide
21CZA097		●	17,4	2 mm carbide*3
137557	●		18,7	2 mm carbide
102825	●		6,5	2 mm carbide*2
131324	●		33,9	2 mm carbide
136013	●	●	41	2 mm carbide
21CZA212	●		9,4	2 mm ruby
21CZA209	●	●	11,2	2 mm ruby
21CZB068	●		15,2	2 mm ruby
21CZA201	●	●	17,4	2 mm ruby
21CZA210	●		18,7	2 mm ruby
21CZA211	●	●	41	2 mm ruby
136758		●	8,6	3 mm carbide
21CZA045	●		9,4	3 mm carbide
103018	●	●	11,7	3 mm carbide
131315	●		15,2	3 mm carbide
103014	●	●	17,4	3 mm carbide
21CZA099		●	17,4	3 mm carbide*3
137559	●		18,7	3 mm carbide
102826	●		6,5	3 mm carbide*2
131317	●		33,9	3 mm carbide
136236	●	●	41	3 mm carbide

*2 : Used extension 209829 for 513-304GE, 513-304GT
*3 : For 513-517W models

Optional accessories

No.	Description
209829	Stylus Extension for Universal Type, Series 513

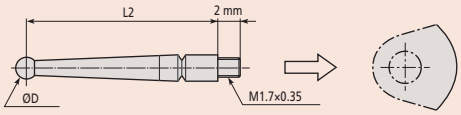

Styli for standard models

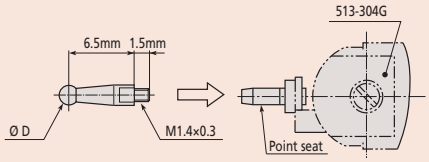

Syli for universal type 513-304GE, 513-304GT

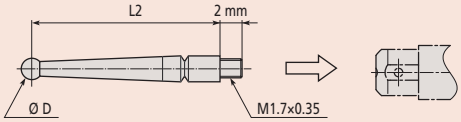

Styli for small type models

All products to be sold to commercial customers. Product illustrations are without obligation. Product descriptions, in particular any and all technical specifications, are only binding when explicitly agreed upon. For suggested retail prices, please refer to the separate price list.

Styli, Stems and Holders

Styli, Stems and Holders

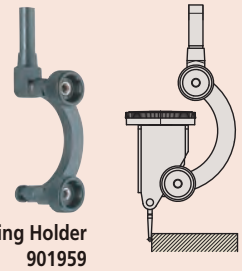

Centering Holder
901959

900209

900211

Spanner 102037

Spanner 301336

190322

902802

902804

102822

102389

900321

Universal Holder

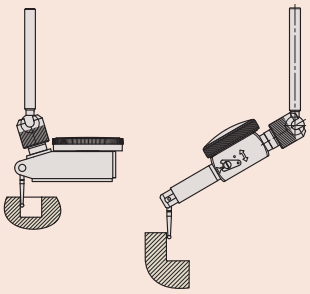

Universal holder with standard type (left)
Universal holder with small type (right)

Centering Holder

No.	Standard models	Stem
901959	●	ø 8 mm

Holding Bars

No.	Standard models	Small type models	L	Description
900209.	●	●	100 mm	9 x 9 mm
953638.	●	●	50 mm	9 x 9 mm
900211	●	●	115 mm	ø 8 mm

Spanner

No.	Standard models	Small type models
102037	●	
301336		●

Stems

No.	Standard models	Small type models	Diameter	Description
902802	●		4 mm	With Knurled Clamp Ring
902803	●		6 mm	With Knurled Clamp Ring
902804	●		8 mm	With Knurled Clamp Ring
902806	●		4 mm, 8 mm	With Knurled Clamp Ring
902807	●		6 mm, 8 mm	With Knurled Clamp Ring
102036		●	4 mm	
102389		●	6 mm	
102822		●	8 mm	
190322	●			Knurled Clamp Ring
21CAB106	●		4 mm	
21CAB103	●		6 mm	
21CAB104	●		8 mm	

Swivel Clamps

No.	Standard models	Small type models	Description
900321	●	●	For ø 4, 8 mm stems and dovetail

Universal Holder

No.	Standard models	Small type models	Stem
21CZA229	●		ø 6 mm
21CZA233	●		ø 8 mm
21CZA230		●	
21CZA234		●	ø 8 mm

Also available!
Inch Models
Visit Online Catalogue www.mitutoyo.eu

All products to be sold to commercial customers. Product illustrations are without obligation. Product descriptions, in particular any and all technical specifications, are only binding when explicitly agreed upon. For suggested retail prices, please refer to the separate price list.

Mitutoyo

ABSOLUTE Digimatic Thickness Gauge

Series 547

This ABSOLUTE Digimatic Thickness Gauge enables you to measure tube wall thickness.

547-360

Metric

With indicator ID-C No. 543-400BS

No.	Range [mm]	Digital step	Indicator No.	Max. measuring depth [mm]	Mass [g]
547-360	0-10	0,01 mm	543-400BS (ID-C)	20	240

Also available! Inch/Metric Models

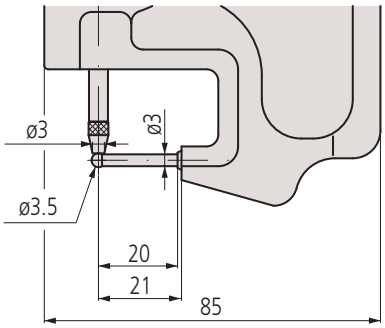

Functions	Series 547
ZERO/ABS	●
GO/±NG judgement	●
Digimatic data output	●
ON/OFF	●
DATA/HOLD	●
Lock function	●
PRESET	●
Counting direction switchable	●
Calculation function	●

Specifications

Accuracy	±10 µm (excluding quantizing error)
Measuring force	≤ 1,5 N
Scale	Capacitance type ABSOLUTE linear encoder
Max. response speed	Unlimited
Contact point	Carbide ball M 2,5 x 0,45 mm
Alarm	Low voltage, counting value composition error, overflow error, tolerance limit setting error (only ID-C)
Power supply	1 battery SR-44
Battery life	approx. 7000 hours

Optional accessories

No.	Description
905338	Digimatic Cable, Flat Straight Type, 1m
905409	Digimatic Cable, Flat Straight Type, 2 m
06ADV380F	USB Input Tool Direct (Digimatic USB) cable, 2m, Flat Straight Type
02AZD790F	U-WAVE T Connection Cable F, Flat Straight Type

Consumable spares

No.	Description
938882	Battery SR44 1.5V
21EZA198	Spindle Lifting Lever, for 12,7mm Range

All products to be sold to commercial customers. Product illustrations are without obligation. Product descriptions, in particular any and all technical specifications, are only binding when explicitly agreed upon. For suggested retail prices, please refer to the separate price list.

ABSOLUTE Digimatic Thickness Gauge

Series 547

ABSOLUTE IP42

Functions	Series 547
ZERO/ABS	●
GO/±NG judgement	●
Digimatic data output	●
ON/OFF	●
DATA/HOLD	●
Lock function	●
PRESET	●
Counting direction switchable	●
Calculation function	●

Specifications

Accuracy	±10 µm (excluding quantizing error)
Measuring force	≤ 1,5 N
Scale	Capacitance type ABSOLUTE linear encoder
Parallelism	10 µm
Max. response speed	Unlimited
Contact point	M 2,5 x 0,45 mm (ISO/JIS type)
Alarm	Low voltage, counting value composition error, overflow error, tolerance limit setting error (ID-C only)
Power supply	1 battery SR-44
Battery life	approx. 7000 hours

Optional accessories

No.	Description
905338	Digimatic Cable, Flat Straight Type, 1m
905409	Digimatic Cable, Flat Straight Type, 2 m
06ADV380F	USB Input Tool Direct (Digimatic USB) cable, 2m, Flat Straight Type
02AZD790F	U-WAVE T Connection Cable F, Flat Straight Type

Consumable spares

No.	Description
938882	Battery SR44 1.5V
21EZA198	Spindle Lifting Lever, for 12,7mm Range

547-321

547-301

547-313

547-315

Metric With indicator ID-C No. 543-400BS

No.	Range [mm]	Digital step	Max. measuring depth [mm]	Type	Mass [g]
547-301	0-10	0,01 mm	30	Ceramic disc contact points	255
547-321	0-10	0,01 mm	120	Ceramic disc contact points and large jaw capacity	425
547-313	0-10	0,01 mm	30	Adjustable anvil	275
547-315	0-10	0,01 mm	30	Blade steel contact point	270

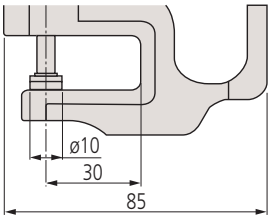

547-301

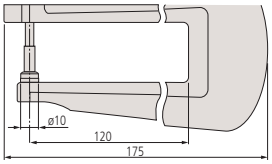

547-321

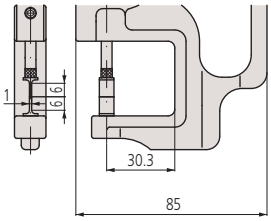

547-315

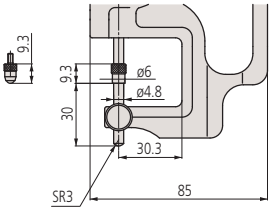

547-313

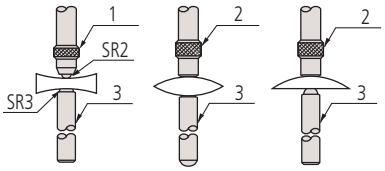

Concave lens | Convex lens | Plano-convex lens

1: Ballpoint; 2: Flatpoint; 3: Anvil

(only for 547-313)

All products to be sold to commercial customers. Product illustrations are without obligation. Product descriptions, in particular any and all technical specifications, are only binding when explicitly agreed upon. For suggested retail prices, please refer to the separate price list.

Mitutoyo

ABSOLUTE Digimatic Thickness Gauge

Series 547

For measuring film, paper, etc., with a resolution of 0,001 mm.

ABSOLUTE

IP42

547-401

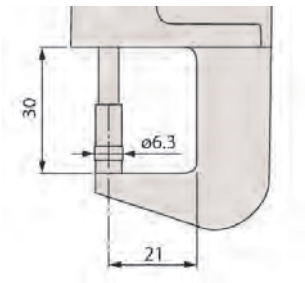

Metric

No.	Range [mm]	Digital step	Indicator No.	Max. measuring depth [mm]	Mass [g]
547-401	0-12	0,01 mm/0,001 mm	543-390BS (ID-C)	21	290

Also available! Inch/Metric Models

Functions	Series 547
ZERO/ABS	●
GO/±NG judgement	●
Digimatic data output	●
ON/OFF	●
DATA/HOLD	●
Lock function	●
PRESET	●
Counting direction switchable	●
Calculation function	●

Specifications

Accuracy	±3 µm (excluding quantizing error)
Measuring force	≤ 3,5 N
Scale	Capacitance type ABSOLUTE linear encoder
Parallelism	3 µm
Max. response speed	Unlimited
Contact point	M 2,5 x 0,45 mm (ISO/JIS type) carbide tip
Alarm	Low voltage, counting value composition error, overflow error, tolerance limit setting error
Power supply	1 battery SR-44
Battery life	approx. 7000 hours

Optional accessories

No.	Description
905338	Digimatic Cable, Flat Straight Type, 1m
905409	Digimatic Cable, Flat Straight Type, 2 m
06ADV380F	USB Input Tool Direct (Digimatic USB) cable, 2m, Flat Straight Type
02AZD790F	U-WAVE T Connection Cable F, Flat Straight Type

Consumable spares

No.	Description
938882	Battery SR44 1.5V
21AZB149	Lifting Lever, S-Type Series 2,3,4 (up to 10mm)

QUICK MINI Thickness Gauge

Series 700

This is a lightweight, palm-sized thickness gauge.

ABSOLUTE

700-119-20

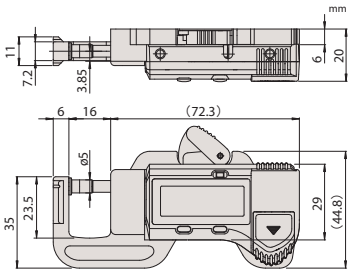

No.	Range [mm]	Digital step	Mass [g]
700-119-20	0-12	0,01 mm	70

Functions	Series 700
ORIGIN	●
ZERO/ABS	●
ON/OFF	●

Specifications

Accuracy	±0,02mm (excluding quantizing error)
Measuring force	2 N
Power supply	Battery SR-44
Battery life	approx. 5 years
Display	LCD, Character height 9 mm
Delivered	In case

Consumable spares

No.	Description
938882	Battery SR44 1.5V

All products to be sold to commercial customers. Product illustrations are without obligation. Product descriptions, in particular any and all technical specifications, are only binding when explicitly agreed upon. For suggested retail prices, please refer to the separate price list.

Dial Indicator Thickness Gauge

Series 7

This metric dial indicator thickness gauge 7331S has a lightweight design.

7327

7331S

7321

7313

7315

7360

Specifications

Accuracy	Refer to the list of specifications
Parallelism	5 µm

Consumable spares

No.	Description
21AZB149	Lifting Lever, S-Type Series 2,3,4 (up to 10mm)
21AZB150	Lifting Lever, S-Type Series 2,3 (10-20mm)

21AZB149 : for 7301/7327/7321/7313/7315/7360
21AZB150 : for 7305/7323

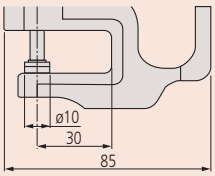

7327 / 7301 / 7305

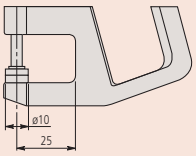

7331S

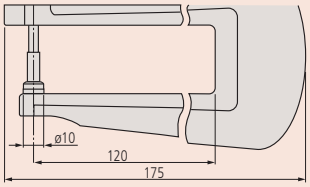

7321 / 7323

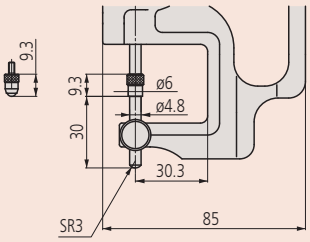

7313

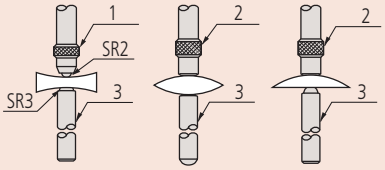

Concave lens | Convex lens | Plano-convex lens

1: Ballpoint; 2: Flatpoint; 3: Anvil

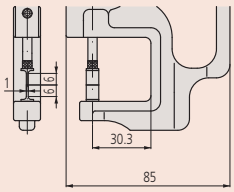

7315

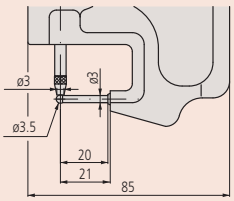

7360

Metric Adjustable anvil

No.	Range [mm]	Graduation	Accuracy	Measuring force [N]	Indicator No.	Max. measuring depth	Mass [g]
7313	0-10	0,01 mm	±0,015 mm	≤ 1,4	2046SB	30 mm	215

Metric Ceramic disc contact points

No.	Range [mm]	Graduation	Accuracy	Measuring force [N]	Indicator No.	Max. measuring depth	Mass [g]
7327	0-1	0,001 mm	±0,005 mm	≤ 1,5	2109SB-10	30 mm	225
7301	0-10	0,01 mm	±0,015 mm	≤ 1,4	2046SB	30 mm	205
7331S	0-10	0,01 mm	±0,02 mm	≤ 1,4		25 mm	140
7305	0-20	0,01 mm	±0,02 mm	≤ 2	2050SB	30 mm	220

Metric Knife-edge contact point

No.	Range [mm]	Graduation	Accuracy	Measuring force [N]	Indicator No.	Max. measuring depth	Mass [g]
7315	0-10	0,01 mm	±0,015 mm	≤ 1,4	2046SB	30 mm	220

Metric Large jaw capacity and ceramic disc contact points

No.	Range [mm]	Graduation	Accuracy	Measuring force [N]	Indicator No.	Max. measuring depth	Mass [g]
7321	0-10	0,01 mm	±0,015 mm	≤ 1,4	2046SB	120 mm	355
7323	0-20	0,01 mm	±0,022 mm	≤ 2	2050SB	120 mm	355

Metric Tube thicknesses - Minimum inside diameter 3,5 mm

No.	Range [mm]	Graduation	Accuracy	Measuring force [N]	Indicator No.	Max. measuring depth	Mass [g]
7360	0-10	0,01 mm	±0,015 mm	≤ 1,4	2046SB	20 mm	200

All products to be sold to commercial customers. Product illustrations are without obligation. Product descriptions, in particular any and all technical specifications, are only binding when explicitly agreed upon. For suggested retail prices, please refer to the separate price list.

Mitutoyo

Internal Dial Caliper Gauge

Series 209

209-901

209-300

209-305

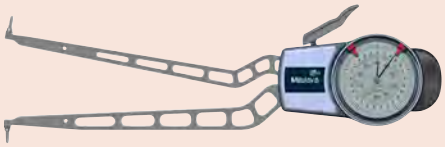

209-902

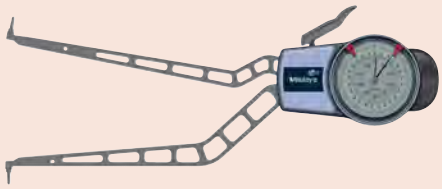

209-903

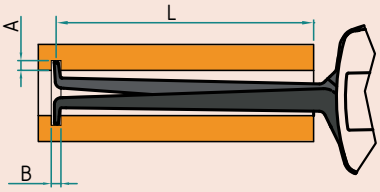

(1) Maximum reach of contact arms over workpiece
(2) Maximum groove depth
(3) Minimum groove width

Metric Measuring contacts : Carbide ball ø0,6 mm

No.	Range [mm]	Measuring force	Graduation [mm]	Accuracy	A (2) [mm]	B (3) [mm]	L (1) [mm]	Type	Mass [g]
209-301	5-15	0,8/1,2 N	0,005	0,015 mm	2,3	0,8	35	fig. 4	160

Metric Measuring contacts : Carbide ball ø1,5 mm

No.	Range [mm]	Measuring force	Graduation [mm]	Accuracy	A (2) [mm]	B (3) [mm]	L (1) [mm]	Type	Mass [g]
209-901	15-65	0,9/1,9 N	0,05	0,05 mm	5,5	1,9	188	fig. 4	355

Metric Measuring contacts : Carbide ball ø1 mm

No.	Range [mm]	Measuring force	Graduation [mm]	Accuracy	A (2) [mm]	B (3) [mm]	L (1) [mm]	Type	Mass [g]
209-302	10-30	1,1/1,6 N	0,01	0,03 mm	5,2	1,2	85	fig. 4	180
209-303	20-40	1,1/1,6 N	0,01	0,03 mm	7	1,2	85	fig. 2	180
209-304	30-50	1,1/1,6 N	0,01	0,03 mm	7	1,2	85	fig. 2	185
209-305	40-60	1,1/1,6 N	0,01	0,03 mm	8,3	1,2	85	fig. 3	195
209-306	50-70	1,1/1,6 N	0,01	0,03 mm	8,3	1,2	85	fig. 3	195
209-307	60-80	1,1/1,6 N	0,01	0,03 mm	8,3	1,2	85	fig. 3	200
209-308	70-90	1,1/1,6 N	0,01	0,03 mm	8,3	1,2	85	fig. 3	200
209-309	80-100	1,1/1,6 N	0,01	0,03 mm	8,3	1,2	85	fig. 3	200

Metric Measuring contacts : Carbide ball ø2 mm

No.	Range [mm]	Measuring force	Graduation [mm]	Accuracy	A (2) [mm]	B (3) [mm]	L (1) [mm]	Type	Mass [g]
209-902	40-90	0,9/1,9 N	0,05	0,05 mm	8,3	2,4	192	fig. 3	370
209-903	70-120	0,9/1,9 N	0,05	0,05 mm	8,3	2,4	192	fig. 3	380

Metric Measuring contacts : Carbide bevel (radius 0,1 mm)

No.	Range [mm]	Measuring force	Graduation [mm]	Accuracy	A (2) [mm]	B (3) [mm]	L (1) [mm]	Type	Mass [g]
209-300	2,5-12,5	0,8/1,2 N	0,005	0,015 mm	0,7	0,4	12	fig. 1	155

Metric Measuring contacts : Interchangeable, carbide ball ø1 mm

No.	Range [mm]	Measuring force	Graduation [mm]	Accuracy	A (2) [mm]	B (3) [mm]	L (1) [mm]	Type	Mass [g]
209-310	50-100	1,1/1,6 N	0,01	0,03 mm	8,3	1,2	85	fig. 5	220
209-311	90-140	1,1/1,6 N	0,01	0,03 mm	8,3	1,2	85	fig. 5	230
209-312	130-180	1,1/1,6 N	0,01	0,03 mm	8,3	1,2	85	fig. 5	230

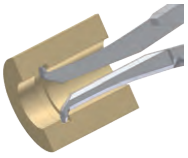

Figure 1

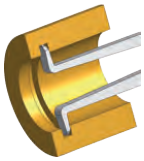

Figure 2

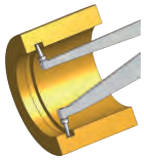

Figure 3

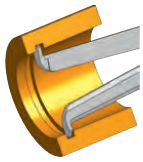

Figure 4

Figure 5

All products to be sold to commercial customers. Product illustrations are without obligation. Product descriptions, in particular any and all technical specifications, are only binding when explicitly agreed upon. For suggested retail prices, please refer to the separate price list.

Internal Digimatic Caliper Gauge

Series 209

Functions	Series 209
SET key	●
DATA key	●
Max. reading	●
Min. reading	●
ABS/INC switchable	●
HOLD function	●
Data output	●
Counting direction switchable	●
Tolerance LED (green/red)	●
Tolerance judgement	●

Specifications

Power supply	2 batteries AAA
Delivered	Including battery and factory certificate

Optional accessories

No.	Description
011530	Holder for Digital Caliper Gauge, 8mm stem for gauge stand
011551	Digimatic Interface Adapter, For series 209
937387	Digimatic Cable, Round 6-Pin Type, 1 m
965013	Digimatic Cable, Round 6 -Pin Type, 2m
06ADV380E	USB Input Tool Direct (Digimatic USB) cable, 2m, Round 6-Pin Type
02AZD790E	U-WAVE T Connection Cable E, Round 6-Pin Type

Consumable spares

No.	Description
011511-1	Battery LR03 (AAA), 4x

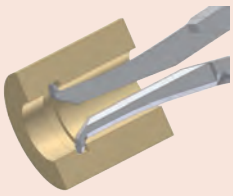

Figure 1

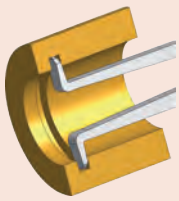

Figure 2

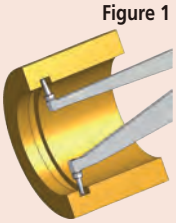

Figure 3

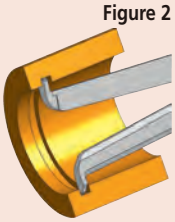

Figure 4

011530

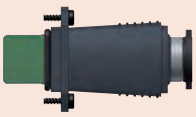

011551

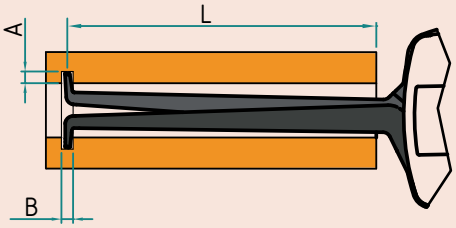

(1) Maximum reach of contact arms over workpiece
(2) Maximum groove depth
(3) Minimum groove width

209-905

Metric/Inch — Measuring contacts : Carbide ball ø0,6 mm

No.	Range [mm]	Measuring force	Graduation [mm]	Accuracy	A (2) [mm]	B (3) [mm]	L (1) [mm]	Type	Mass [g]
209-551	5-15	0,8-1,2 N	0,005	0,015 mm	2,3	0,8	35	fig. 4	230

Metric/Inch — Measuring contacts : Carbide ball ø1,3 mm

No.	Range [mm]	Measuring force	Graduation [mm]	Accuracy	A (2) [mm]	B (3) [mm]	L (1) [mm]	Type	Mass [g]
209-904	13-43	1,2/1,7 N	0,02	0,04 mm	5,7	1,5	127	fig. 2	360

Metric/Inch — Measuring contacts : Carbide ball ø1,5 mm

No.	Range [mm]	Measuring force	Graduation [mm]	Accuracy	A (2) [mm]	B (3) [mm]	L (1) [mm]	Type	Mass [g]
209-905	15-65	1/1,8 N	0,02	0,06 mm	5,5	1,9	188	fig. 2	415
209-906	30-60	1,2/1,7 N	0,02	0,04 mm	6,2	1,8	132	fig. 3	370

Metric/Inch — Measuring contacts : Carbide ball ø1 mm

No.	Range [mm]	Measuring force	Graduation [mm]	Accuracy	A (2) [mm]	B (3) [mm]	L (1) [mm]	Type	Mass [g]
209-552	10-30	1,1-1,6 N	0,01	0,03 mm	5,2	1,2	85	fig. 4	250
209-553	20-40	1,1-1,6 N	0,01	0,03 mm	7	1,2	85	fig. 2	250
209-554	30-50	1,1-1,6 N	0,01	0,03 mm	7	1,2	85	fig. 2	255
209-555	40-60	1,1-1,6 N	0,01	0,03 mm	8,3	1,2	85	fig. 3	265
209-556	50-70	1,1-1,6 N	0,01	0,03 mm	8,3	1,2	85	fig. 3	265
209-557	60-80	1,1-1,6 N	0,01	0,03 mm	8,3	1,2	85	fig. 3	270
209-558	70-90	1,1-1,6 N	0,01	0,03 mm	8,3	1,2	85	fig. 3	270

Metric/Inch — Measuring contacts : Carbide ball ø2 mm

No.	Range [mm]	Measuring force	Graduation [mm]	Accuracy	A (2) [mm]	B (3) [mm]	L (1) [mm]	Type	Mass [g]
209-907	50-80	1,2/1,7 N	0,02	0,04 mm	8,3	2,4	132	fig. 3	370
209-908	70-100	1,2/1,7 N	0,02	0,04 mm	8,3	2,4	132	fig. 3	375
209-909	90-120	1,2/1,7 N	0,02	0,04 mm	8,3	2,4	132	fig. 3	380
209-910	40-90	1/1,8 N	0,02	0,06 mm	8,3	2,4	192	fig. 3	420

Metric/Inch — Measuring contacts : Carbide bevel (radius 0,1 mm)

No.	Range [mm]	Measuring force	Graduation [mm]	Accuracy	A (2) [mm]	B (3) [mm]	L (1) [mm]	Type	Mass [g]
209-550	2,5-12,5	0,8-1,2 N	0,005	0,015 mm	0,7	0,4	12	fig. 1	225

All products to be sold to commercial customers. Product illustrations are without obligation. Product descriptions, in particular any and all technical specifications, are only binding when explicitly agreed upon. For suggested retail prices, please refer to the separate price list.

External Dial Caliper Gauge

Series 209

Metric

Measuring contacts: bevel radius: 0,4 mm (209-405), 0,75 (209-921)

No.	Range [mm]	Measuring force	Graduation [mm]	Accuracy	Hb (2) [mm]	Hf (3) [mm]	L (1) [mm]	Type	Mass [g]
209-405	0-20	1,1/1,6 N	0,01	0,03 mm	24,6	24,6	85	fig. 1	210
209-921	0-50	0,8/1,7 N	0,05	0,05 mm	30	30	167	fig. 1	430

Metric

Measuring contacts : Carbide ball ø1,5 mm, ø2 mm (209-911)

No.	Range [mm]	Measuring force	Graduation [mm]	Accuracy	Hb (2) [mm]	Hf (3) [mm]	L (1) [mm]	Type	Mass [g]
209-911	0-50	0,8/1,7 N	0,05	0,05 mm	30	30	167	fig. 2	430
209-402	0-10	0,8/1,2 N	0,005	0,015 mm	19,1	18,6	35	fig. 2	170
209-404	0-20	1,1/1,6 N	0,01	0,03 mm	24,7	24,6	85	fig. 2	210
209-407	0-20	1,1/1,6 N	0,01	0,03 mm	24,7	2,5	85	fig. 4	200

Metric

Measuring contacts : Carbide ball ø 1,5 mm / bevel radius 0,4 mm

No.	Range [mm]	Measuring force	Graduation [mm]	Accuracy	Hb (2) [mm]	L (1) [mm]	Type	Mass [g]
209-401	0-10	0,8/1,2 N	0,005	0,015 mm	18,8	35	fig. 8	165
209-406	0-20	1,1/1,6 N	0,01	0,03 mm	24,7	80	fig. 3	200

Metric

Measuring contacts : Carbide ball ø2 mm / hardened steel radius 0,5 mm

No.	Range [mm]	Measuring force	Graduation [mm]	Accuracy	Hb (2) [mm]	L (1) [mm]	Type	Mass [g]
209-603	0-10	0,3/1,3 N	0,1	0,1 mm	5	36	fig. 5	40

Metric

Measuring contacts : Carbide ball ø3 mm (209-912), ø2 mm (209-843)

No.	Range [mm]	Measuring force	Graduation [mm]	Accuracy	Hb (2) [mm]	Hf (3) [mm]	L (1) [mm]	Type	Mass [g]
209-912	0-50	0,8/1,7 N	0,05	0,05 mm	30	4,3	169	fig. 4	400
209-843	0-10	0,3/1,3 N	0,1	0,1 mm	5	5	36	fig. 7	40

Metric

Measuring contacts : Disc measuring faces ø6 mm

No.	Range [mm]	Measuring force	Graduation [mm]	Accuracy	Hb (2) [mm]	Hf (3) [mm]	L (1) [mm]	Type	Mass [g]
209-403	0-10	0,8/1,2 N	0,005	0,02 mm	21,7	14,8	36	fig. 6	175

Figure 1

Figure 2

Figure 3

Figure 4

Figure 5

Figure 6

Figure 7

Figure 8

Optional accessories

No.	Description
011530	Holder for Digital Caliper Gauge, 8mm stem for gauge stand

Except 209-603, 209-843

209-402

209-405

209-406

209-843

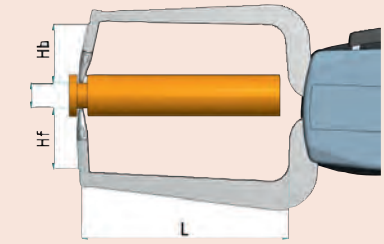

Figures 1/2/6/7

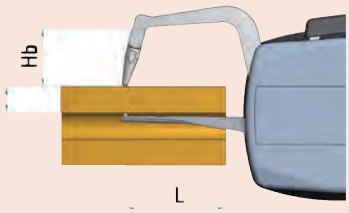

Figures 3/4/5/8

(1) Maximum reach of contact arms over workpiece
(2) Maximum penetration depth of upper contact
(3) Maximum penetration depth of lower contact

All products to be sold to commercial customers. Product illustrations are without obligation. Product descriptions, in particular any and all technical specifications, are only binding when explicitly agreed upon. For suggested retail prices, please refer to the separate price list.

External Digimatic Caliper Gauge

Series 209

Functions	Series 209
SET key	●
DATA key	●
Max. reading	●
Min. reading	●
ABS/INC switchable	●
HOLD function	●
Data output	●
Counting direction switchable	●
Tolerance LED (green/red)	●
Tolerance judgement	●

Specifications

Power supply	2 batteries AAA
Delivered	Including battery and factory certificate

Optional accessories

No.	Description
011530	Holder for Digital Caliper Gauge, 8mm stem for gauge stand
011551	Digimatic Interface Adapter, For series 209
937387	Digimatic Cable, Round 6-Pin Type, 1 m
965013	Digimatic Cable, Round 6 -Pin Type, 2m
06ADV380E	USB Input Tool Direct (Digimatic USB) cable, 2m, Round 6-Pin Type
02AZD790E	U-WAVE T Connection Cable E, Round 6-Pin Type

Consumable spares

No.	Description
011511-1	Battery LR03 (AAA), 4x

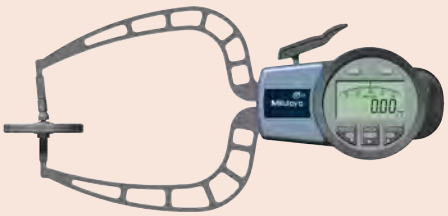

209-915

011530

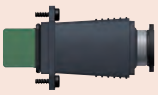

011551

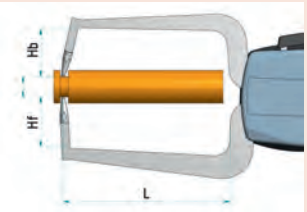

(1) Maximum reach of contact arms over workpiece
(2) Maximum penetration depth of upper contact
(3) Maximum penetration depth of lower contact

209-572

209-913

Measuring contacts : Carbide ball ø1,5 mm

No.	Range [mm]	Measuring force	Graduation [mm]	Accuracy	Hb (2) [mm]	Hf (3) [mm]	L (1) [mm]	Type	Mass [g]
209-570	0-10	0,8/1,2 N	0,005	0,015 mm	19,1	18,6	35	fig. 1	240
209-572	0-20	1,1/1,6 N	0,01	0,03 mm	24,7	24,6	85	fig. 1	280
209-573	0-20	1,1/1,6 N	0,01	0,03 mm	24,7	2,5	80	fig. 2	270

Measuring contacts : Carbide ball ø3 mm

No.	Range [mm]	Measuring force	Graduation [mm]	Accuracy	Hb (2) [mm]	Hf (3) [mm]	L (1) [mm]	Type	Mass [g]
209-913	0-30	0,9/1,6 N	0,02	0,04 mm	30	30	114	fig. 1	430
209-914	0-30	0,9/1,6 N	0,02	0,04 mm	30	4	116	fig. 2	410

Measuring contacts : Disc measuring faces ø10 mm

No.	Range [mm]	Measuring force	Graduation [mm]	Accuracy	Hb (2) [mm]	Hf (3) [mm]	L (1) [mm]	Type	Mass [g]
209-571	0-10	0,8/1,2 N	0,005	0,02 mm	21,7	14,8	35	fig. 3	245

Measuring contacts : Disc measuring faces ø50 mm

No.	Range [mm]	Measuring force	Graduation [mm]	Accuracy	Hb (2) [mm]	Hf (3) [mm]	L (1) [mm]	Type	Mass [g]
209-915	0-30	0,9/1,6 N	0,02	0,04	36	24	116	fig. 4	430

Figure 1

Figure 2

Figure 3

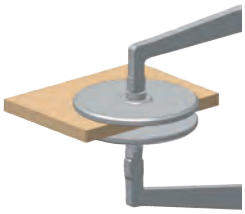

Figure 4

All products to be sold to commercial customers. Product illustrations are without obligation. Product descriptions, in particular any and all technical specifications, are only binding when explicitly agreed upon. For suggested retail prices, please refer to the separate price list.

External Digimatic Caliper Gauge

Series 209

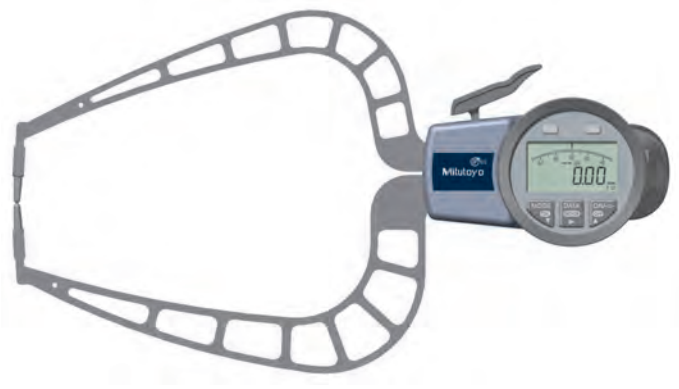

209-918

Measuring contacts : Carbide ball ø3 mm

No.	Range [mm]	Measuring force	Graduation [mm]	Accuracy	Hb (2) [mm]	Hf (3) [mm]	L (1) [mm]	Type	Mass [g]
209-918	0-50	0,8/1,7 N	0,02	0,06 mm	30	30	167	fig. 1	490
209-919	0-50	0,8/1,7 N	0,02	0,06 mm	30	4,3	169	fig. 2	460

Measuring contacts : Disc measuring faces ø50 mm

No.	Range [mm]	Measuring force	Graduation [mm]	Accuracy	Hb (2) [mm]	Hf (3) [mm]	L (1) [mm]	Type	Mass [g]
209-920	0-50	0,8/1,7 N	0,02	0,08 mm	36	24	167	fig. 3	500

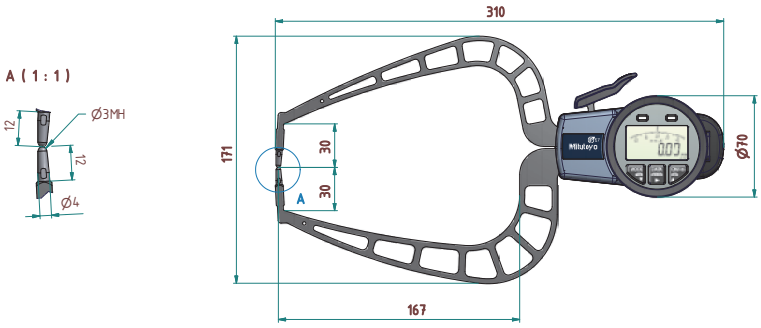

209-918

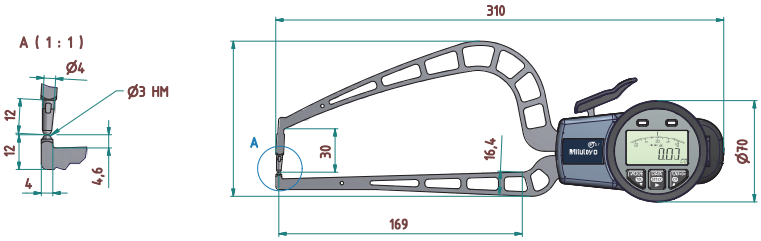

209-919

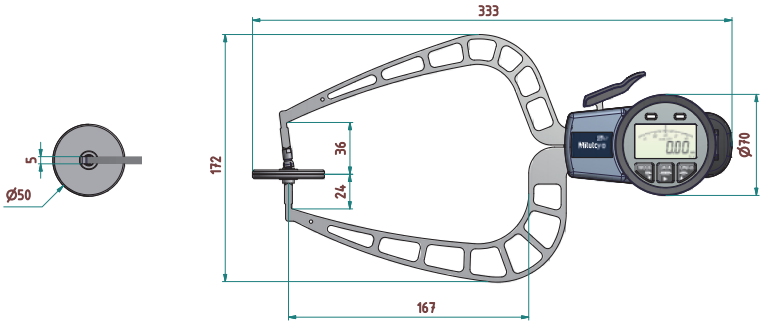

209-920

Functions	Series 209
SET key	●
DATA key	●
Max. reading	●
Min. reading	●
ABS/INC switchable	●
HOLD function	●
Data output	●
Counting direction switchable	●
Tolerance LED (green/red)	●
Tolerance judgement	●

Specifications

Power supply	2 batteries LR03 AAA
Delivered	Delivered Including Battery and factory certificate

Optional accessories

No.	Description
937387	Digimatic Cable, Round 6-Pin Type, 1 m
965013	Digimatic Cable, Round 6 -Pin Type, 2m
06ADV380E	USB Input Tool Direct (Digimatic USB) cable, 2m, Round 6-Pin Type
02AZD790E	U-WAVE T Connection Cable E, Round 6-Pin Type
011530	Holder for Digital Caliper Gauge, 8mm stem for gauge stand
011551	Digimatic Interface Adapter, For series 209

Consumable spares

No.	Description
011511-1	Battery LR03 (AAA), 4x

Figure 1

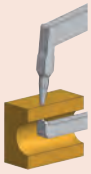

Figure 2

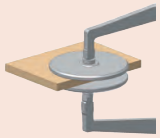

Figure 3

011530

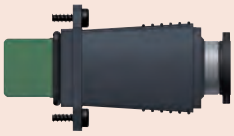

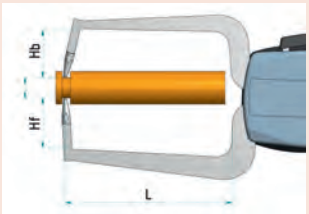

(1) Maximum reach of contact arms over workpiece
(2) Maximum penetration depth of upper contact
(3) Maximum penetration depth of lower contact

All products to be sold to commercial customers. Product illustrations are without obligation. Product descriptions, in particular any and all technical specifications, are only binding when explicitly agreed upon. For suggested retail prices, please refer to the separate price list.

Internal / External Digimatic Caliper Gauge

Series 209

Functions	Series 209
SET key	●
DATA key	●
ABS/INC switchable	●
Function lock	●
Data output	●
Counting direction switchable	●
HOLD	●
mm / inch switching	●
DATA-Logger (100 measured values)	●
Max/Min value	●
Tolerance LED (green/red)	●
Auto Power OFF after 1/5/10 min. non use	●

Specifications

Power supply	Lithium-Polymer power pack
Delivered	Factory certificate User Manual wireless recharge charging pad with connection accessories
Resolution	0,001 / 0,002 / 0,005 / 0,01 mm

Optional accessories

No.	Description
63AAA158	Digimatic Interface Adapter, for 209-925 - 209-928
63AAA159	Power Supply Pad for Series 209
937387	Digimatic Cable, Round 6-Pin Type, 1 m
965013	Digimatic Cable, Round 6 -Pin Type, 2m
02AZD790E	U-WAVE T Connection Cable E, Round 6-Pin Type
06ADV380E	USB Input Tool Direct (Digimatic USB) cable, 2m, Round 6-Pin Type

63AAA158

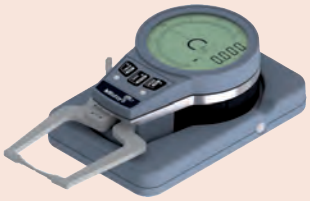

63AAA159

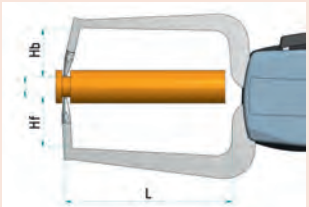

(1) Maximum reach of contact arms over workpiece
(2) Maximum penetration depth of upper contact
(3) Maximum penetration depth of lower contact

209-927

209-928

209-929

209-925

209-926

1. Measuring contacts : Carbide R 0,12 mm

No.	Range [mm]	Measuring force	Accuracy	A (2) [mm]	B (3) [mm]	L (1) [mm]	Type	Mass [g]
209-927	2,5-12,5	0,8-1,3	0,01 mm	0,7	0,6	12	fig. 4	160

2. Measuring contacts : Carbide ball ø0,6 mm

No.	Range [mm]	Measuring force	Accuracy	A (2) [mm]	B (3) [mm]	L (1) [mm]	Type	Mass [g]
209-928	5-20	0,8-1,3	0,01 mm	2,2	0,8	44	fig. 3	160

3. Measuring contacts : Carbide ball ø1 mm

No.	Range [mm]	Measuring force	Accuracy	A (2) [mm]	B (3) [mm]	L (1) [mm]	Type	Mass [g]
209-929	10-25	0,8-1,3	0,01 mm	4	1,5	46	fig. 3	160

4. Measuring contacts : Carbide ball ø1,5 mm

No.	Range [mm]	Measuring force	Accuracy	Hb (2) [mm]	Hf (3) [mm]	L (1) [mm]	Type	Mass [g]
209-925	0-15	1,3 - 1,5	0,01 mm	17	17	45	fig. 2	170

5. Measuring contacts : Carbide R 0,4 mm

No.	Range [mm]	Measuring force	Accuracy	Hb (2) [mm]	Hf (3) [mm]	L (1) [mm]	Type	Mass [g]
209-926	0-15	1,3 - 1,5	0,015 mm	12	12	45	fig. 1	170

Figure 1

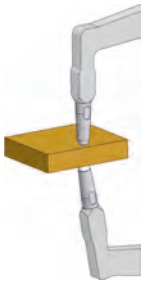

Figure 2

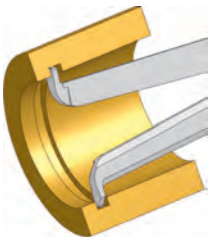

Figure 3

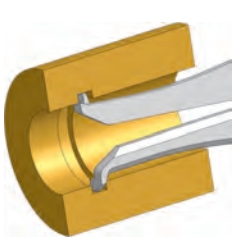

Figure 4

All products to be sold to commercial customers. Product illustrations are without obligation. Product descriptions, in particular any and all technical specifications, are only binding when explicitly agreed upon. For suggested retail prices, please refer to the separate price list.

Spring Balance

Series 546

This spring balance has a range of applications, offering you the following benefits:
- You can set micro switches, relay springs and valves.
- It enables you testing the measuring force of dial indicators.
- You can also use it for adjusting tension and compression springs.
- A divided dial plate allows you to make measurements in both directions.

546-112

546-137

Peak Hold

No.	Range	Graduation
546-133	10-100 mN	5 mN
546-134	30-300 mN	10 mN
546-135	0,06-0,5 N	0,02 N
546-136	0,1-1 N	0,05 N
546-137	0,15-1,5 N	0,05 N
546-138	0,3-3 N	0,1 N
546-139	0,6-5 N	0,2 N

Standard

No.	Range	Graduation
546-112	6-50 mN	2 mN
546-113	10-100 mN	5 mN
546-114	30-300 mN	10 mN
546-115	0,06-0,5 N	0,02 N
546-116	0,1-1 N	0,05 N
546-117	0,15-1,5 N	0,05 N
546-118	0,3-3 N	0,1 N
546-119	0,6-5 N	0,2 N

Specifications

Accuracy	$^1/_2$ graduation
Mass	56 g

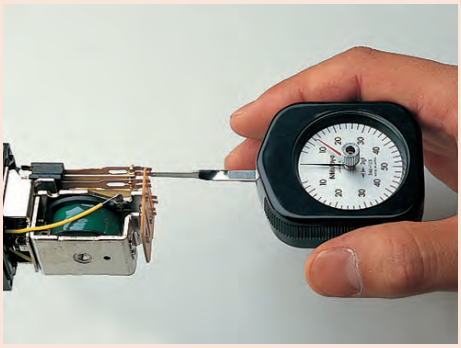

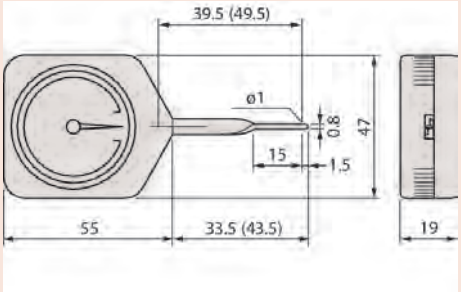

Dimensions in brackets refer to No. 546-112, 546-113, 546-133

All products to be sold to commercial customers. Product illustrations are without obligation. Product descriptions, in particular any and all technical specifications, are only binding when explicitly agreed upon. For suggested retail prices, please refer to the separate price list.

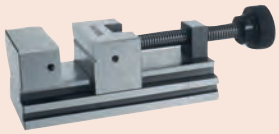

Stands, Bench Tools, Vices, V-Blocks, Plates, Protrectors, Levels, Squares, Rules, Spring Calipers

Page 300

All products to be sold to commercial customers. Product illustrations are without obligation. Product descriptions, in particular any and all technical specifications, are only binding when explicitly agreed upon. For suggested retail prices, please refer to the separate price list.

Gauge Stand with Hardened Steel Anvil

Series 7

Standard version

7001-10

7002-10

519-109-10

No.	Effective table dimensions [mm]	Column Ø [mm]	Max. measurement height [mm]	Measuring table	Stem hole ø [mm]	Mass [kg]
7001-10	Ø 58	30	95	Serrated (101462)	ø 3/8" / **9,53 mm** , 8 mm with bush (standard accessory)	4
7002-10	Ø 58	30	95	Flat (101461)	ø 3/8" / **9,53 mm** , 8 mm with bush (standard accessory)	4
519-109-10	Ø 58	30	318	Serrated (101462)	ø 3/8" / **9,53 mm** , 8 mm with bush (standard accessory)	6

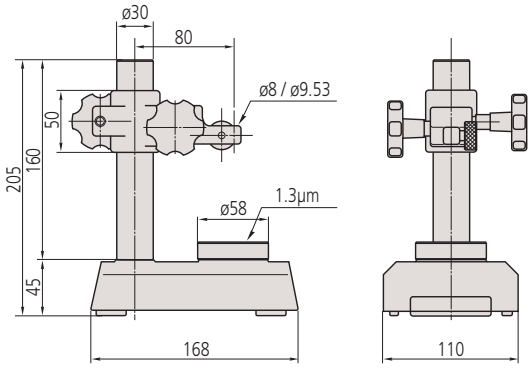

7001-10, 7002-10

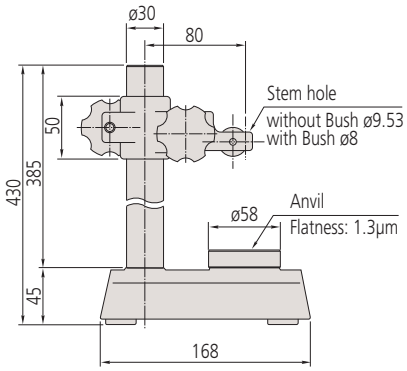

519-109-10

Specifications

Fine adjustment	1 m
Perpendicularity table-stem hole	0,4/100 mm/mm
Table flatness	1,3 µm

Standard accessories

No.	Description
101461	Flat Anvil for Gauge Stand, Ø58mm
101462	Serrated Anvil for Gauge Stand, Ø58mm
21JAA316	Stem Bush for Gauge Stand, 9,53mm to 8mm

Optional accessories

No.	Description
101463	Convex Anvil for Gauge Stand, Ø58mm

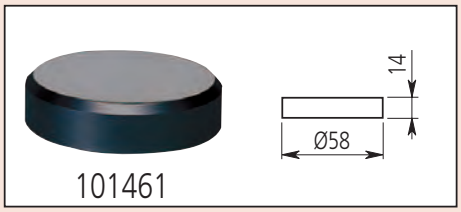

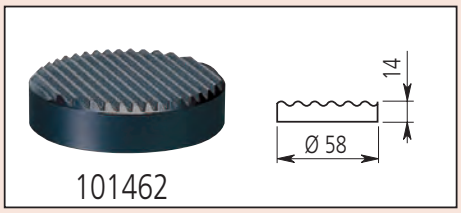

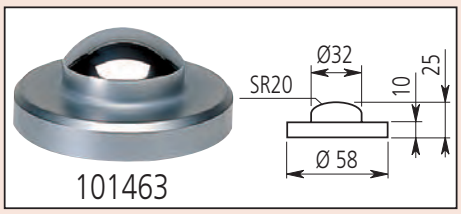

All products to be sold to commercial customers. Product illustrations are without obligation. Product descriptions, in particular any and all technical specifications, are only binding when explicitly agreed upon. For suggested retail prices, please refer to the separate price list.

Gauge Stand with Hardened Steel Anvil

Series 215, Series 7

Standard version

7007-10

215-405-10

215-505-10
with Linear Gauge (optional)

No.	Effective table dimensions [mm]	Column Ø [mm]	Max. measurement height [mm]	Stem hole ø [mm]	Mass [kg]
7007-10	90 x 90	30	90	ø 3/8" / **ø 9,53 mm** (ø 8 mm with bush)	5
215-405-10	110 x 110	40	235	ø 3/8" **9,53 mm** (ø 8 mm with bush)	10,9
215-505-10	150 x 150	50	275	ø 20 mm (ø 3/8" / **9,53 mm** 8 mm with bush)	19,7

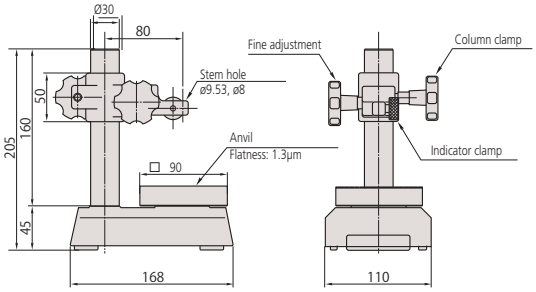

7007-10

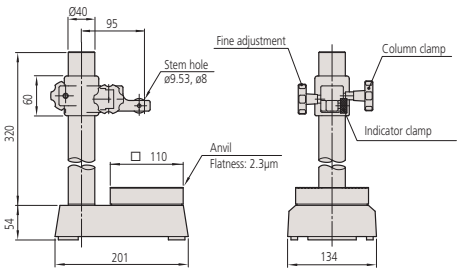

215-405-10

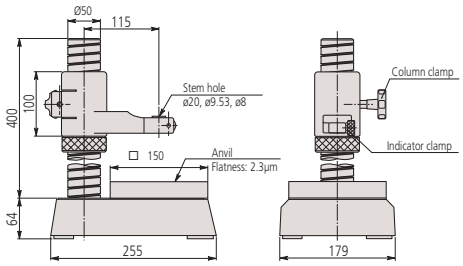

215-505-10

Specifications

Fine adjustment	1 mm (215-505-10: screw on column)
Perpendicularity table-stem hole	0,4/100 mm/mm
Table flatness	1,3 (7007-10) 2,3 (215-405-10, 215-505-10) µm

Standard accessories

No.	Description
21JAA316	Stem Bush for Gauge Stand, 9,53mm to 8mm
21JAA329	Stem Bush for Gauge Stand, 20mm to 8mm
21JAA330	Stem Bush for Gauge Stand, 20mm to 9,53mm

21JAA316 only for 7007-10 + 215-405-10
21JAA329 and 21JAA330 only for 215-505-10

Optional accessories

No.	Description
21JAA331	Stem Bush for Gauge Stand, 20mm to 15mm

21JAA331 : only for 215-505-10

All products to be sold to commercial customers. Product illustrations are without obligation. Product descriptions, in particular any and all technical specifications, are only binding when explicitly agreed upon. For suggested retail prices, please refer to the separate price list.

Mitutoyo

Gauge Stand with Hardened Steel Anvil

Series 913

Standard version

– Simple standard version.

913-101

913-102

No.	Effective table dimensions [mm]	Max. measurement height [mm]	Stem hole ø [mm]
913-101	ø 50	100	8 mm
913-102	60 x 70	100	8 mm

Specifications

Column Ø	22 mm

Optional accessories

No.	Description
913-201	Horizontal Holder, for 913-101, 913-102

913-201

Stand for Precision Bore Gauge

Series 215

– For batch-measurement of small parts.

215-120-10

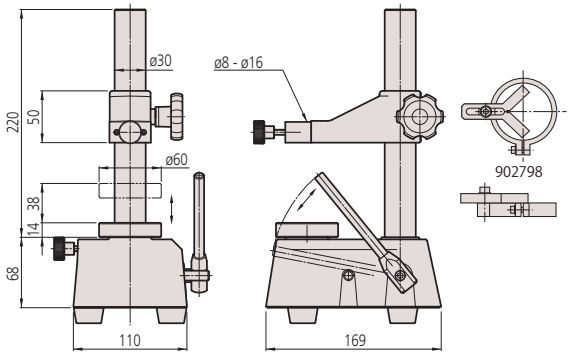

No.	Maximum measuring height [mm]	Effective table dimensions [mm]	Measuring stroke [mm]	Mass [kg]
215-120-10	110	ø 60	max. 38	6,5

Optional accessories

No.	Description
902798	V-Attachment for 215-120-10, Stand for Bore Gauge

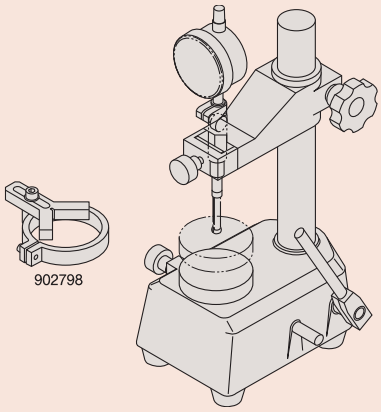

All products to be sold to commercial customers. Product illustrations are without obligation. Product descriptions, in particular any and all technical specifications, are only binding when explicitly agreed upon. For suggested retail prices, please refer to the separate price list.

Gauge Stand with Granite Base

Series 912

This gauge stand comes with a wear-resistant black granite table.

912-101

No.	Base size [mm]	Effective table dimensions [mm]	Column Ø [mm]	Max. measurement height [mm]	Throat [mm]	Arm ø [mm]	Stem hole ø [mm]	Table flatness [µm]	Mass [kg]
912-101	150 x 100 x 40	100 x 100	16	180	150	16	8	2	2,8

Series 912

- Black granite, fine diamond-lapped measuring table.
- Arm with 120 mm projection.

912-105

No.	Base size [mm]	Effective table dimensions [mm]	Column Ø [mm]	Max. measurement height [mm]	Throat [mm]	Fine adjustment	Stem hole ø [mm]	Table flatness [µm]	Mass [kg]
912-105	260 x 140 x 50	200 x 140	35	180	120	8 mm	8	2	9,5

All products to be sold to commercial customers. Product illustrations are without obligation. Product descriptions, in particular any and all technical specifications, are only binding when explicitly agreed upon. For suggested retail prices, please refer to the separate price list.

Mitutoyo

Gauge Stand with Granite Base

Series 215

This jointed magnetic stand offers you the following benefits:
- It comes with a mechanical locking system and allows fine adjustment.
- You can also fix a dial indicator in any position by mechanically clamping the articulated arm.

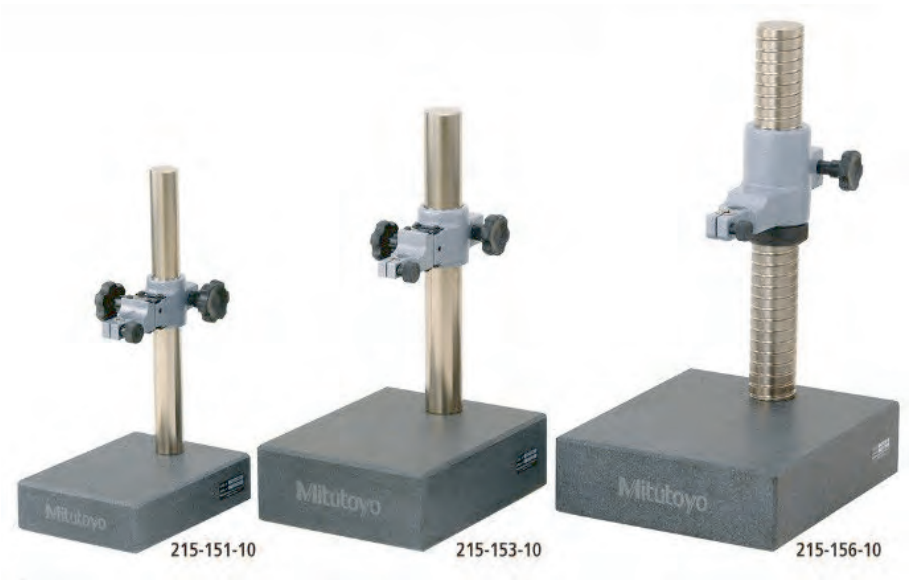

No.	Column Ø [mm]	Max. measurement height [mm]	Fine adjustment [mm]	Stem hole ø [mm]	Table flatness [µm]	Perpendicularity table-stem hole [mm/mm]	Mass [kg]
215-150-10	30	120	1	ø 3/8"/ ø **9,53mm** (Ø 8 mm with bush)	3	0,2/100	5,4
215-151-10	30	260	1	ø 3/8" /ø **9,53mm** (ø 8 mm with bush)	3	0,2/100	7,5
215-153-10	40	250	1	ø 3/8"/ ø **9,53mm** (ø 8 mm with bush)	3,5	0,2/100	16
215-156-10	50	300	1	ø 20 mm (ø 3/8" / **9,53 mm**, 8 mm with bush)	3,5	0,2/100	27,5

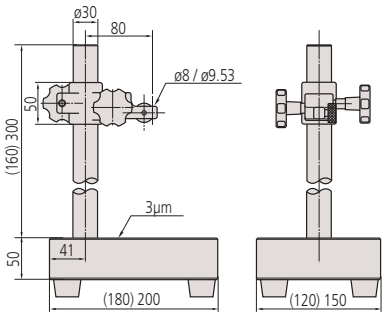

215-151-10 (215-150-10)

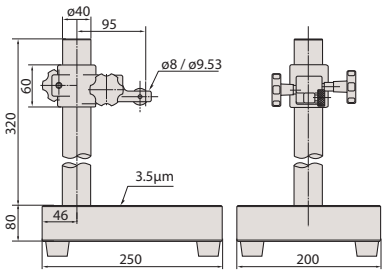

215-153-10

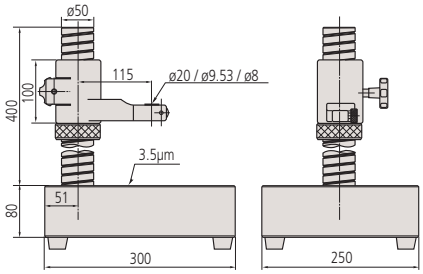

215-156-10

Standard accessories

No.	Description
21JAA316	Stem Bush for Gauge Stand, 9,53mm to 8mm
21JAA329	Stem Bush for Gauge Stand, 20mm to 8mm
21JAA330	Stem Bush for Gauge Stand, 20mm to 9,53mm

21JAA316 for 215-150-10, 215-151-10, 215-153-10
21JAA329 and 21JAA330 for 215-156-10

Optional accessories

No.	Description
21JAA331	Stem Bush for Gauge Stand, 20mm to 15mm

only for 215-156-10

All products to be sold to commercial customers. Product illustrations are without obligation. Product descriptions, in particular any and all technical specifications, are only binding when explicitly agreed upon. For suggested retail prices, please refer to the separate price list.

Jointed Magnetic Stand

Series 011

- With mechanical locking system and fine adjustment
- Allows a dial indicator to be fixed in any position by mechanically clamping the articulateded arm.

011533

011358

011359

011360

No.	Clamping device	Mag-netic force (verti-cal) [N]	Base size (LxWxH) [mm]	Total height [mm]	Working radius [mm]	Stem hole ø [mm]	Thread Arm/Base	Mass [kg]
011533	magnetic	300	34 x 30 x 35	220	130	8	M6 x 1	0,45
011358	magnetic	750	60 x 50 x 55	310	200	8	M8 x 1,25	1,55
011359	magnetic	750	60 x 50 x 55	397	280	8	M8 x 1,25	1,85
011360	magnetic	900	75 x 50 x 55	517	400	8	M8 x 1,25	2,1

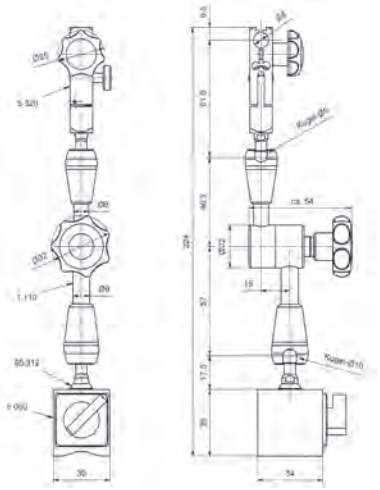

011533

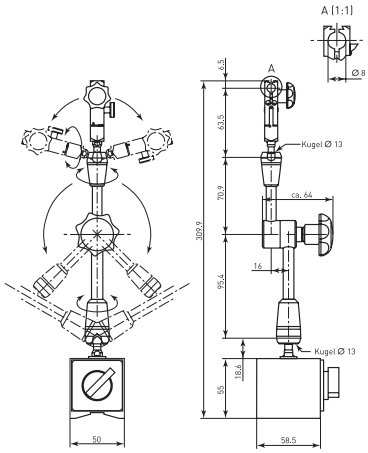

011358

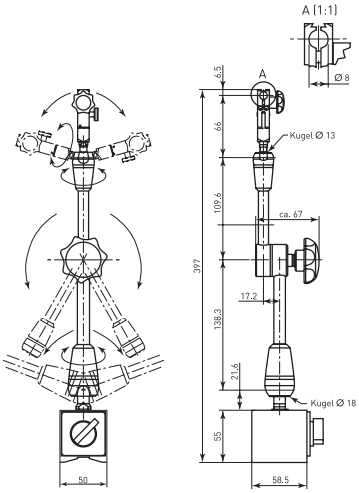

011359

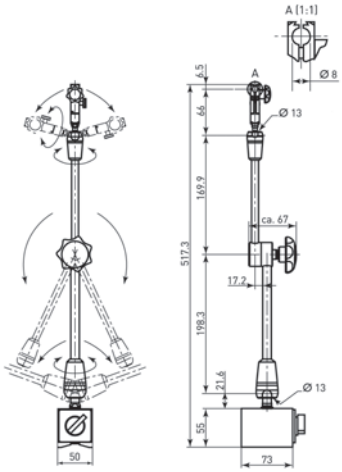

011360

All products to be sold to commercial customers. Product illustrations are without obligation. Product descriptions, in particular any and all technical specifications, are only binding when explicitly agreed upon. For suggested retail prices, please refer to the separate price list.

Mitutoyo

Jointed Magnetic Stand

Series 7

This jointed magnetic stand offers you the following benefits:
- It comes with a mechanical locking system and allows fine adjustment.
- You can also fix a dial indicator in any position by mechanically clamping the articulated arm.

7031B

7032B

7033B

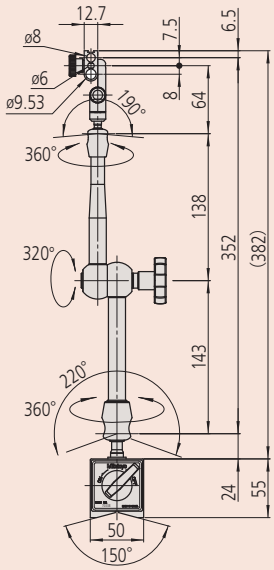

7033B

No.	Clamping device	Magnetic force (vertical) [N]	Base size (LxWxH) [mm]	Fine adjustment °	Total height [mm]	Working radius [mm]	Stem hole ø [mm]	Thread Arm/ Base	Mass [kg]
7031B	magnetic	300	36 x 30 x 36	±4	214	159	6, 8, 3/8" / **9,53 mm**	M5 x 0,8	0,59
7032B	magnetic	600	59 x 50 x 55	±4	345	260	6, 8, 3/8" / **9,53 mm**	M8 x 1,25	1,6
7033B	magnetic	600	59 x 50 x 55	±4	425	352	6, 8, 3/8" / **9,53 mm**	M8 x 1,25	1,75

Flexible Jointed Arm

Series 011 / 56A

56AAK793
Mechanical clamping
Dimensions: see 7033B

011361
Mechanical clamping
Dimensions : see 011359

011362
Mechanical clamping
Dimensions : see 011358

No.	Working radius [mm]	Stem hole ø [mm]
011361	±200	8
011362	±280	8
011363	±400	8
56AAK793	±320	6 mm, 8 mm, 3/8" / **9,53 mm**

Specifications

Thread	M 8 x 1,25 mm

All products to be sold to commercial customers. Product illustrations are without obligation. Product descriptions, in particular any and all technical specifications, are only binding when explicitly agreed upon. For suggested retail prices, please refer to the separate price list.

Magnetic Base

56AAL200

Series 011 / 7

– V-block type.

No.	Base size (LxWxH) [mm]	Magnetic force (vertical) [N]	Threaded bore	Mass [kg]
56AAL200	59 x 50 x 55	600	M 8 x 1,25 mm	1
011364	75 x 50 x 55	900	M 8 x 1,25 mm	1,25

Magnetic Stand

Series 7

V-block base type.

7010SN

7011SN

No.	Clamping device	Fine adjustment [mm]	Total height [mm]	Working radius [mm]	Mass [kg]	Thread Arm/Base
7010SN	magnetic	None	235	150	1,25	M8 x 1,25
7011SN	magnetic	yes	235	160	1,45	M8 x 1,25

Specifications

Base size (LxWxH)	59 x 50 x 55 mm
Stem hole ø	**ø8mm** with stem bush mm

Standard accessories

No.	Description
02AZC291	Stem Bush for Magnet Stand, 9,53mm to 8mm

Optional accessories

No.	Description
02AZC282	Cross arm for Magnet Stand, 300mm

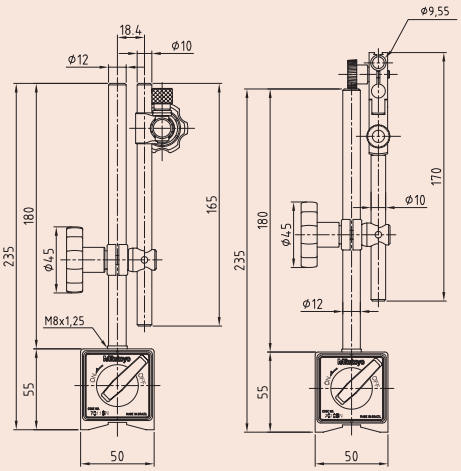

7010SN 7011SN

Specifications

Base size (LxWxH)	59 x 50 x 55 mm
Stem hole ø	ø8mm with stem bush mm

Standard accessories

No.	Description
02AZC291	Stem Bush for Magnet Stand, 9,53mm to 8mm

Series 7

With V-block base and flexible arm.

7012-10

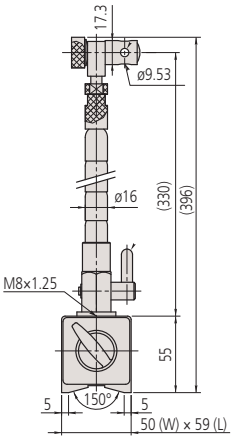

No.	Clamping device	Total height [mm]	Working radius [mm]	Mass [kg]	Thread Arm/Base
7012-10	magnetic	396	250	1,5	M8 x 1,25

All products to be sold to commercial customers. Product illustrations are without obligation. Product descriptions, in particular any and all technical specifications, are only binding when explicitly agreed upon. For suggested retail prices, please refer to the separate price list.

Magnetic Stand

Series 7

This is a mini type of magnetic stand that offers you the following benefits:
- Mini measuring stand without magnet ON/OFF.
- It is designed to accept dial test indicators with 6mm or 8mm diameter stems, or dovetail.

7014

No.	Clamping device	Magnetic force (vertical) [N]	Total height [mm]	Working radius [mm]	Mass [g]
7014-10	magnetic	150	106	68	170

Specifications

Base size (LxWxH)	ø 30 mm
Stem hole ø	6 / 8 mm

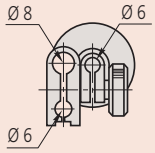

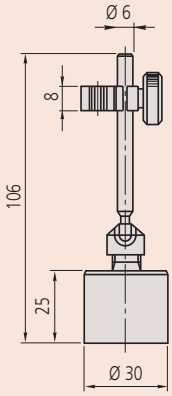

All products to be sold to commercial customers. Product illustrations are without obligation. Product descriptions, in particular any and all technical specifications, are only binding when explicitly agreed upon. For suggested retail prices, please refer to the separate price list.

Precision Bench Centre

Series 967

These precision bench centres are used for cylindrical and tapered parts.
They offer you the following benefits:
- You can make fast and precise checks of runout on cylindrical/tapered parts.
- The base and centre-stocks are manufactured from stress-relieved and aged cast iron.
- The centres are made from hardened and precision ground steel.

967-201-10

Specifications

Stem hole ø	ø 8 mm with stem bush mm

Standard accessories

No.	Description
56AAK066	Rod Assembly for Bench Center
56AAK426	Rod Assembly for Bench Center
02AZA292	Stem Bush for Bench Centre, 9,53mm to 8mm

56AAK066 Stand for 967-203-10, 967-201-10
56AAK426 Stand for 967-202-10

No.	Stand No.	Ød Min-Max [mm]	L1 [mm]	L2 [mm]	A [mm]	B [mm]	C [mm]	H [mm]	Ø D [mm]	Stroke [mm]	Mass [kg]
967-203-10	56AAK066	22	150	220	310	113	40	50	16	10	7
967-201-10	56AAK066	22	300	400	500	144	55	75	16	12	13
967-202-10	56AAK426	30	600	730	900	222	100	125	20	15	70

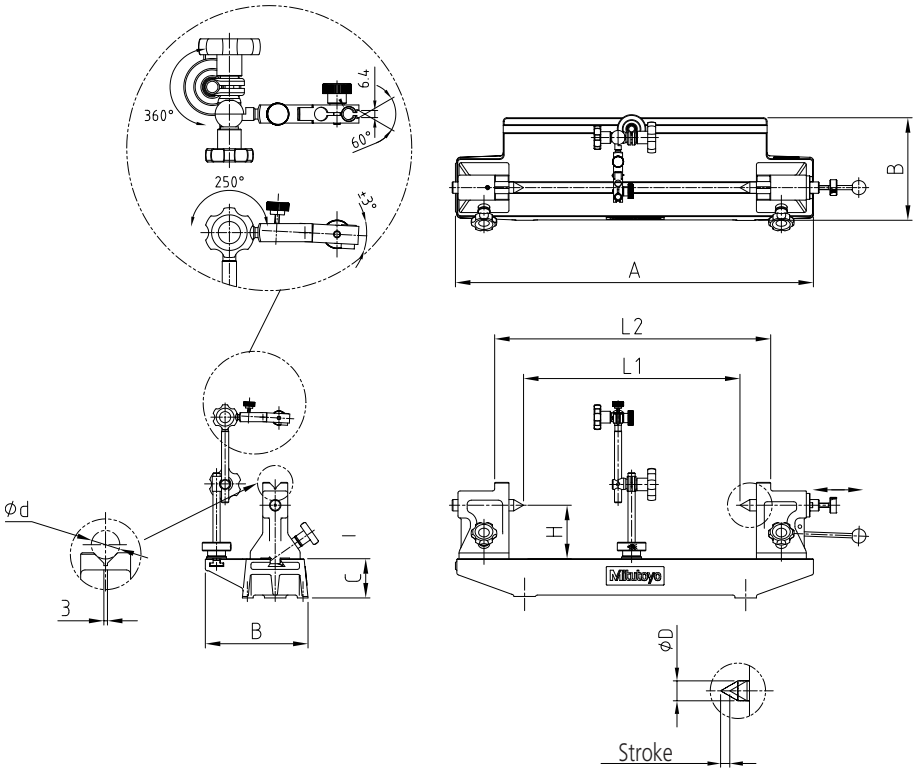

All products to be sold to commercial customers. Product illustrations are without obligation. Product descriptions, in particular any and all technical specifications, are only binding when explicitly agreed upon. For suggested retail prices, please refer to the separate price list.

Mitutoyo

Precision Vice

Series 930

- It is made of tool steel, hardened and precision ground.
- It has a horizontally ground V-groove in the movable jaw.

Specifications

Parallelism	0,002 mm / 100 mm
Squareness	0,005 mm / 100 mm

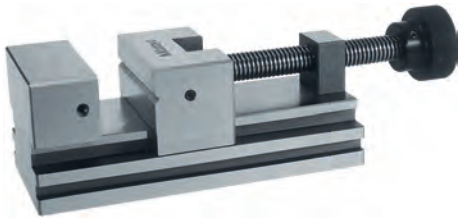

930-602

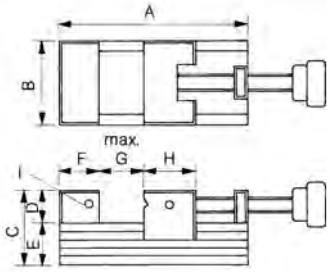

No.	A [mm]	B [mm]	C [mm]	D [mm]	E [mm]	F [mm]	G [mm]	H [mm]	I [mm]	Mass [kg]
930-611	90	60	50	25	25	25	30	30	M 5	1,6
930-601	160	70	62	30	32	33	80	45	M 6	4
930-602	210	90	80	40	40	40	120	50	M 6	7,6
930-612	285	120	90	40	50	55	150	70	M 6	17,4

Series 930

- It is made of tool steel, hardened and precision ground.
- It includes one key bar with hydraulic amplification of the clamping force.
- It has a horizontally ground V-groove in the movable jaw.

Specifications

Parallelism	0,002 mm / 100 mm
Squareness	0,03 mm / 100 mm

930-616

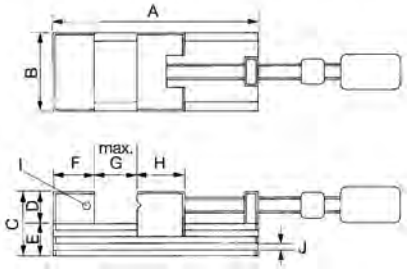

No.	A [mm]	B [mm]	C [mm]	D [mm]	E [mm]	F [mm]	G max. [mm]	H [mm]	I [mm]	J Height x Depth [mm]	Mass [kg]
930-616	285	120	90	40	50	55	150	70	M 6	10 x 7	17,7

Series 930

- It is made of plastics, light weight, and protecting workpieces from scratches.

Specifications

Parallelism	0,02 mm
Squareness	0,03 mm (930-641), 0,05 mm (930-642)

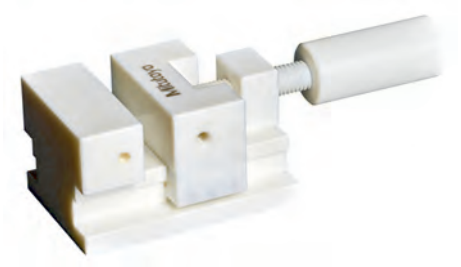

930-641

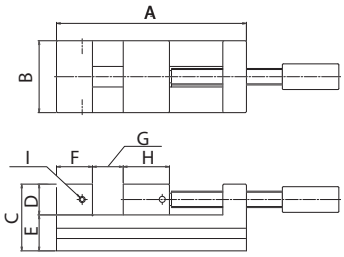

No.	A [mm]	B [mm]	C [mm]	D [mm]	E [mm]	F [mm]	G max. [mm]	H [mm]	I [mm]	Mass [kg]
930-641	90	60	50	25	25	25	30	30	M 5	0,35
930-642	160	70	62	30	32	33	80	45	M 6	0,7

All products to be sold to commercial customers. Product illustrations are without obligation. Product descriptions, in particular any and all technical specifications, are only binding when explicitly agreed upon. For suggested retail prices, please refer to the separate price list.

Precision Vice

Specifications

Parallelism	0,002 mm / 100 mm
Squareness	0,005 mm / 100 mm

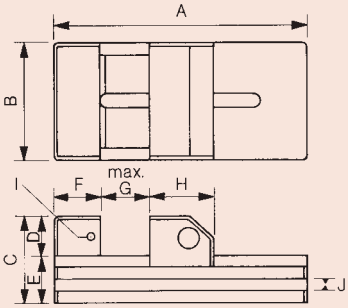

Series 930

This precision vice has a pull-down clamping action and offers you the following benefits:
- It gives you high accuracy for precision grinding, milling, measuring and eroding.
- It is made of tool steel, hardened and precision ground.

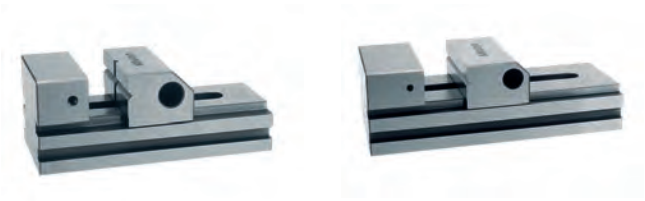

930-607 930-632

With horizontally ground V-groove in the movable jaw

No.	A [mm]	B [mm]	C [mm]	D [mm]	E [mm]	F [mm]	G max. [mm]	H [mm]	I [mm]	J Height x Depth [mm]	Mass [kg]
930-630	70	30	35	15	20	20	25	25	M4	-	0,35
930-631	110	45	45	20	25	25	50	35	M5	8 x 6	1
930-632	285	120	90	40	50	60	150	70	M6	12 x 7	13,5
930-633	370	175	95	45	50	60	200	110	M8	12 x 10	28,7

With quick adjustment and vertically and horizontally ground V-groove in the movable jaw

No.	A [mm]	B [mm]	C [mm]	D [mm]	E [mm]	F [mm]	G max. [mm]	H [mm]	I [mm]	J Height x Depth [mm]	Mass [kg]
930-606	160	70	62	30	32	33	80	45	M 6	8 x 7	3
930-607	210	90	80	40	40	40	120	50	M 6	10 x 7	5,8

Precision Sine Plate

Specifications

Parallelism	0,002 mm / 100 mm
Squareness	0,005 mm / 100 mm
Setting accuracy at 45°	±15"

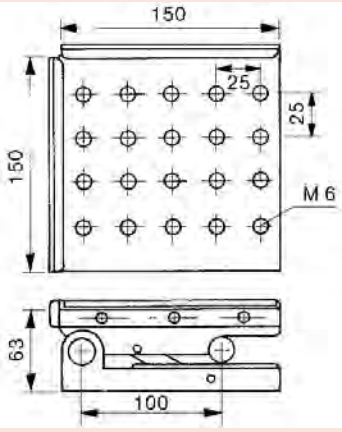

Series 930

This is a front axis sine vice that offers you the following benefits:
- It is made of tool steel, hardened and precision ground.
- Its bearing and holding bolt is hardened and ground.
- Using the clamping device you can lock the vice in any angular position within the adjustment range.
- Accurate angle setting is made by gauge blocks, max. 46°.

930-626

No.	Mass [kg]
930-626	7,6

All products to be sold to commercial customers. Product illustrations are without obligation. Product descriptions, in particular any and all technical specifications, are only binding when explicitly agreed upon. For suggested retail prices, please refer to the separate price list.

Precision Sine Plate

Series 930

This is a Precision Sine Plate made of alloyed tool steel that offers you the following benefits:
- It is made of alloyed tool steel, hardened and precision ground.
- Its bearing and holding bolt is hardened and ground.
- Using the clamping device you can lock the vice in any angular position within the adjustment range.
- Accurate angle setting is made by gauge blocks, max. 46°.

930-628

930-629

Compound-axis type
With M6 clamping holes

No.	Mass [kg]
930-628	11,3

Coumpound-axis type
With lever-operated magnetic chuck

No.	Mass [kg]
930-629	20

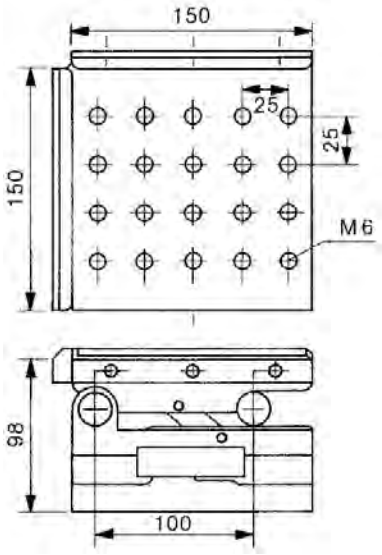

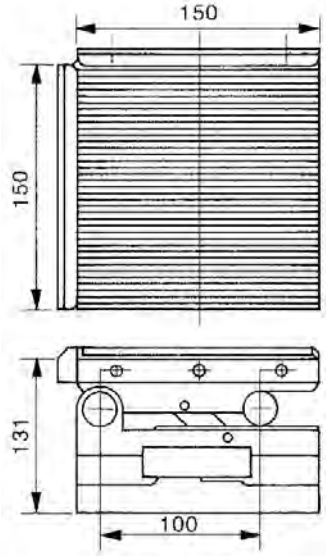

Specifications

Parallelism	0,002 mm / 100 mm
Squareness	0,005 mm / 100 mm
Setting accuracy at 45°	± 15"

All products to be sold to commercial customers. Product illustrations are without obligation. Product descriptions, in particular any and all technical specifications, are only binding when explicitly agreed upon. For suggested retail prices, please refer to the separate price list.

Cast Iron V-Block

Specifications

Parallelism between V-groove and base surface	16 µm
Hardness	180-250 HBW
Difference of the height of the pair	16 µm
Delivered	in pairs

Series 910

- Made of dense special cast iron, highly wear resistant.
- The 90° V-block cutting angle is parallel to the base and ismetric in pairs.
- For scribing, adjusting and testing cylindrical parts.

910-112

No.	Length [mm]	Width [mm]	Height [mm]	Max. workpiece ø [mm]	Mass [kg]
910-111	100	40	30	6-40	1,5
910-112	150	50	40	8-50	3,5
910-113	200	70	50	8-70	6,5
910-114	250	85	60	12-85	10
910-115	300	100	70	12-100	15

Cast Iron V-Block

Specifications

Parallelism between V-groove and base surface	16 µm
Hardness	180-250 HBW
Difference of the height of the pair	16 µm
Delivered	in pairs

Series 911

These are quadruple-V type V-Blocks, that offer you the following benefits:
- 90° V-blocks enable you to scribe, adjust and test cylindrical parts.
- There are two V-blocks per set.

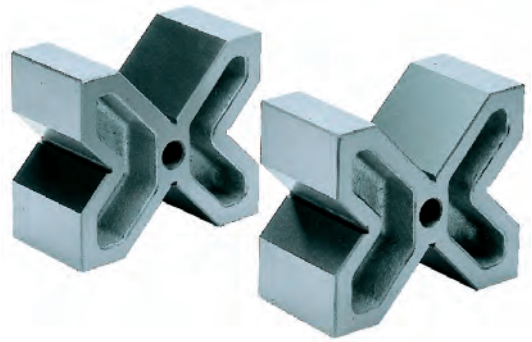

911-111

No.	Length [mm]	Width [mm]	Height [mm]	Max. workpiece ø [mm]	Mass [kg]
911-111	60	120	100	8-90	6,5
911-112	75	150	130	8-110	13,5
911-113	90	200	170	8-150	23

All products to be sold to commercial customers. Product illustrations are without obligation. Product descriptions, in particular any and all technical specifications, are only binding when explicitly agreed upon. For suggested retail prices, please refer to the separate price list.

Mitutoyo

Hardened Steel V-Block

Series 181

These Hardened Steel V-Blocks have clamp brackets and offer you the following benefits:
- There are two V-blocks per set.
- The feature V-angle 90° clamping brackets.
- Contact faces are ground and lapped.
- Designed as a fixture to enable you to check cylindrical precision machined parts.

Specifications

Parallelism between V-groove and all side surfaces	6 µm
Perpendicularity between V-grooves and back surface	9 µm
Hardness	58-63 HRC
Difference of the height of the pair	12 µm
Symmetry of the V-grooves	6 µm
Delivered	In pairs

181-903-10

Sample application

No.	Length [mm]	Width [mm]	Height [mm]	Max. workpiece ø [mm]	Mass [kg]
181-902-10	41	31,8	31,8	25	0,75
181-903-10	75	58	58	50	3,6

Magnetic V-Block

Series 181

These Magnetic V-Blocks are a regular-length type and offer you the following benefits:
- Contact faces are ground and lapped.
- They are of regular length with two differently sized, 90° V-grooves.
- You can use them for holding ferromagnetic cylindrical parts for scribing, adjusting, testing, etc.

Specifications

Parallelism between V-groove and all side surfaces	10 µm
Perpendicularity between V-grooves and back surface	181-246 21 µm 181-947 21µm 181-946 11 µm µm
Difference of the height of the pair	10 µm
Symmetry of the V-grooves	10 µm
Delivered	In pairs (181-946 and 181-947) Individually (181-246)

181-946

No.	Length [mm]	Width [mm]	Height [mm]	Max. receiver for workpiece V-groove 1 Ø [mm]	Max. receiver for workpiece V-groove 2 Ø [mm]	Magnetic force [N]	Mass [kg]
181-246	98	70	95	50,8	25,4	980	4
181-947	98	70	95	50,8	25,4	980	8
181-946	64	58	79	50,8	25,4	490	3,8

All products to be sold to commercial customers. Product illustrations are without obligation. Product descriptions, in particular any and all technical specifications, are only binding when explicitly agreed upon. For suggested retail prices, please refer to the separate price list.

Cast Iron Surface Plate

Specifications

Accuracy	According to DIN 876 Grade 1 : fine scraped Grade 3 : fine planed

Series 902

– A ribbed design gives you rigidity with minimum weight, and a special cast iron confers a high degree of wear resistance.

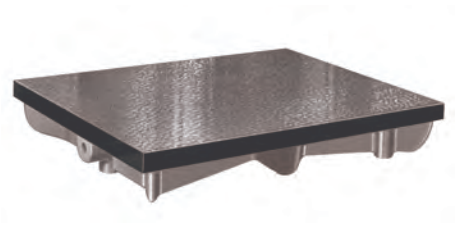

902-304

No.	Remarks	Dimensions L x W x H [mm]	Mass [kg]
902-301	Accuracy Grade 1	300 x 300 x 85	15
902-302	Accuracy Grade 1	400 x 400 x 90	35
902-303	Accuracy Grade 1	500 x 400 x 100	40
902-304	Accuracy Grade 1	600 x 500 x 120	65
902-305	Accuracy Grade 1	800 x 500 x 140	95
902-306	Accuracy Grade 1	1000 x 750 x 170	210
902-307	Accuracy Grade 1	1200 x 800 x 180	230
902-308	Accuracy Grade 1	1500 x 1000 x 200	490
902-309	Accuracy Grade 1	2000 x 1000 x 220	780
902-101	Accuracy Grade 3	300 x 300 x 85	15
902-102	Accuracy Grade 3	400 x 400 x 90	35
902-103	Accuracy Grade 3	500 x 400 x 100	40
902-104	Accuracy Grade 3	600 x 500 x 120	65
902-105	Accuracy Grade 3	800 x 500 x 140	95
902-106	Accuracy Grade 3	1000 x 750 x 170	210
902-107	Accuracy Grade 3	1200 x 800 x 180	230
902-108	Accuracy Grade 3	1500 x 1000 x 200	490
902-109	Accuracy Grade 3	2000 x 1000 x 220	780

Granite Square 90°

Specifications

Accuracy	Grade 00
Flatness	DIN 876
Perpendicularity	DIN 875
Delivered	With certificate of inspection

Series 972

– It is made of natural hard stone, with two sides precision ground.

972-106

No.	Length [mm]	Width [mm]	Mass [kg]
972-106	300 x 200	50	6,5
972-107	400 x 250	50	10
972-108	500 x 300	60	17
972-109	600 x 400	70	30

All products to be sold to commercial customers. Product illustrations are without obligation. Product descriptions, in particular any and all technical specifications, are only binding when explicitly agreed upon. For suggested retail prices, please refer to the separate price list.

Granite Surface Plate DIN876

Series 901

These Granite Surface Plates offer you the following benefits:
– Delivery is without a stand but with steel ball inserts.

1. Accuracy Grade 00

No.	Dimensions L x W x H [mm]	Max. workpiece load [kg]	Mass [kg]
901-131	400 x 250 x 50	50	15
901-132	400 x 400 x 50	60	25
901-133	630 x 400 x 70	65	53
901-134	630 x 630 x 70	75	83
901-135	1000 x 630 x 100	150	189
901-136	1000 x 1000 x 100	250	300
901-137	1200 x 800 x 160	600	460
901-138	1600 x 1000 x 160	650	768
901-139	2000 x 1000 x 220	750	1320

2. Accuracy Grade 0

No.	Dimensions L x W x H [mm]	Max. workpiece load [kg]	Mass [kg]
901-121	400 x 250 x 50	100	15
901-122	400 x 400 x 50	120	25
901-123	630 x 400 x 70	130	53
901-124	630 x 630 x 70	150	83
901-125	1000 x 630 x 100	300	189
901-126	1000 x 1000 x 100	500	300
901-127	1200 x 800 x 160	1200	460
901-128	1600 x 1000 x 160	1300	768
901-129	2000 x 1000 x 220	1500	1320

3. Accuracy Grade 1

No.	Dimensions L x W x H [mm]	Max. workpiece load [kg]	Mass [kg]
901-111	400 x 250 x 50	100	15
901-112	400 x 400 x 50	120	25
901-113	630 x 400 x 70	130	53
901-114	630 x 630 x 70	150	83
901-115	1000 x 630 x 100	300	189
901-116	1000 x 1000 x 100	500	300
901-117	1200 x 800 x 160	1200	460
901-118	1600 x 1000 x 160	1300	768
901-119	2000 x 1000 x 220	1500	1320

4. Accuracy Grade 2

No.	Dimensions L x W x H [mm]	Max. workpiece load [kg]	Mass [kg]
901-101	400 x 250 x 50	100	15
901-102	400 x 400 x 50	120	25
901-103	630 x 400 x 70	130	53
901-104	630 x 630 x 70	150	83
901-105	1000 x 630 x 100	300	189
901-106	1000 x 1000 x 100	500	300
901-107	1200 x 800 x 160	1200	460
901-108	1600 x 1000 x 160	1300	768
901-109	2000 x 1000 x 220	1500	1320

Stand

No.	Dimensions L x W x H [mm]	Mass [kg]
901-931	630 x 400 x 50	22
901-932	630 x 630 x 70	25
901-933	1000 x 630 x 100	28
901-934	1000 x 1000 x 100	30
901-935	1200 x 800 x 160	30
901-936	1600 x 1000 x 160	35
901-937	2000 x 1000 x 220	40

Specifications

Accuracy	According to DIN 876
Vickers hardness	HV 850-900
Flexural strength	13-22 N/mm^2
Compressive strength	Approx. 280 N/mm^2
Linear coefficient of expansion	(5 to 7,5) x 10^{-6} x K^{-1}

Granite plate and stand (optional)

- Stress relieved for maximum stability.
- Harder than steel.

All products to be sold to commercial customers. Product illustrations are without obligation. Product descriptions, in particular any and all technical specifications, are only binding when explicitly agreed upon. For suggested retail prices, please refer to the separate price list.

Combination Square Set

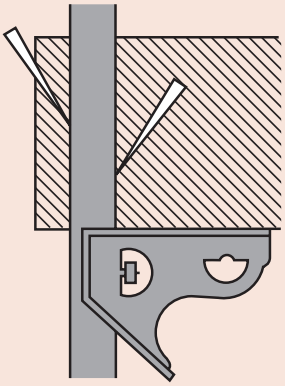

180-102B
Square head

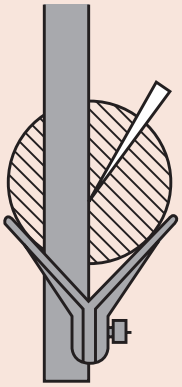

180-202B
Center head

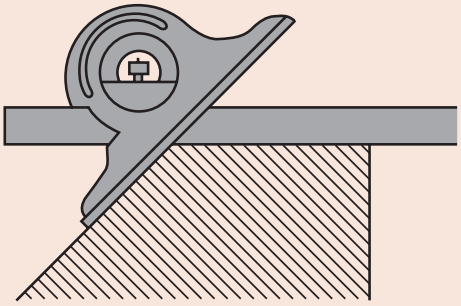

180-301B
Revesible protectorhead

Series 180

This Combination Square Set offers you the following benefits:
- Three heads are attachable to the stainless steel rule (blade), enabling you to take versatile measurements of various types of workpiece.
- The heads are hardened.

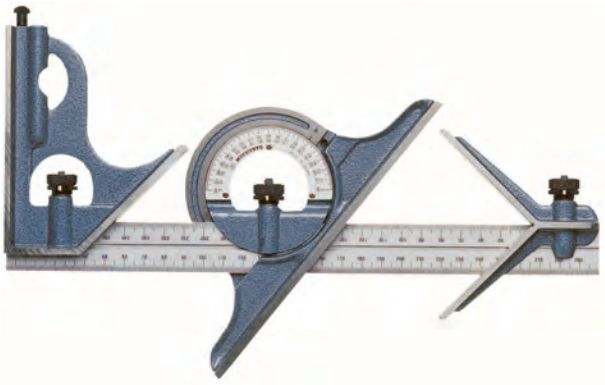

180-910B

Metric

No.	Description	Mass [g]
180-910B	Combination set : square head **(180-102B)** center head **(180-202B)** protractor head **(180-301B)** 300 mm blade size **(180-505B)**	1110

Blade (individual)

No.	Range [mm]	Graduation	Mass [g]
180-405B	150	1 mm; 0,5 mm; 1 mm; 0,5 mm	40
180-505B	300	1 mm; 0,5 mm; 1 mm; 0,5 mm	130

Head (individual)

No.	Description	Mass [g]
180-102B	Square head, hardened and ground, with spirit level and scriber	350
180-202B	Centre head, hardened and quenched	150
180-301B	Reversible protractor head,with spirit level, bidirectional graduation from 0 to 180°	520

All products to be sold to commercial customers. Product illustrations are without obligation. Product descriptions, in particular any and all technical specifications, are only binding when explicitly agreed upon. For suggested retail prices, please refer to the separate price list.

Mitutoyo

Universal Bevel Protractor

Series 187

This Universal Bevel Protector offers you the following features:
- Its high-precision angle gauge enables you to take accurate angle measurements of machines, moulds and jigs.
- You can attach it to height gauges.
- It comes with a magnifying glass.

187-901

187-908
with height gage holder

Metric

No.	Blade edge angle	Blade length	Mass [g]
187-901	w/60°, 45° and 30° edges	150, 300 mm	390
187-907	w/60° and 45° edges	150 mm	284
187-908	w/60° and 45° edges	300 mm	318

Also available! Inch Models

Specifications

Graduation	5 ' (0° - 90° - 0°)
Circle division	4 x 90°
Delivered	In a box

Standard accessories

No.	Description
187-106	Steel Rule, **150mm**/6", Metric/Inch
187-107	Steel Rule, **300mm**/12", Metric/Inch
950750	Holder for Mounting on Height Gauges, Metric, Series 187

187-106 for 187-901, 187-908
187-107 for 187-901, 187-907
950750 for Height Gage with 9x 9 mm scriber shaft

Optional accessories

No.	Description
187-105	Acute angle attachment, for Series 187

187-105 standard accessory for 187-901

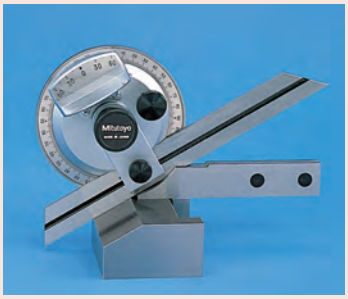

Series 187

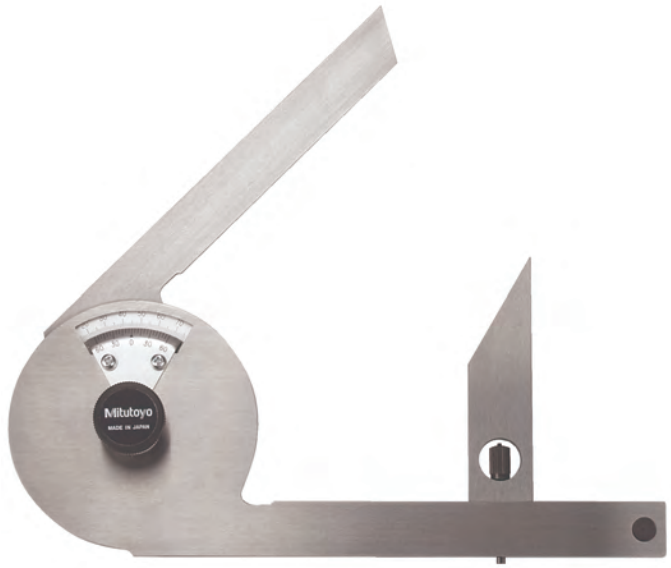

187-201

No.	Length [mm]	Fixed blade length [mm]	Adjustable blade length [mm]	Mass [g]
187-201	135	135	150	212

Specifications

Graduation	5'
Circle division	4 x 90°
Delivered	in a box with acute angle attachment

Standard accessories

No.	Description
187-105	Acute angle attachment, for Series 187

Optional accessories

No.	Description
952624	Holder for Mounting on Height Gauges, Metric, 187-201

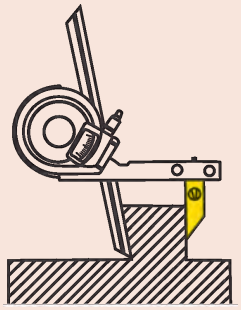

Application with acute angle attachment

All products to be sold to commercial customers. Product illustrations are without obligation. Product descriptions, in particular any and all technical specifications, are only binding when explicitly agreed upon. For suggested retail prices, please refer to the separate price list.

Digimatic Universal Protractor

Functions	Series 187
ON/OFF	●
DATA/HOLD	●
Data output	●
ZERO SET	●
PRESET	●
Angle sexagesimal/decimal	●

Specifications

Digital step	1' (0,01°)
Repeatability	1' (0,01°)
Max. permissible error	2' (0,03°)
Battery life	approx. 2000 hours
Display	LCD with Character Height 6,5 mm
Delivered	in a box including battery

Standard accessories

No.	Description
187-106	Steel Rule, **150mm**/6", Metric/Inch
187-107	Steel Rule, **300mm**/12", Metric/Inch
950750	Holder for Mounting on Height Gauges, Metric, Series 187

187-106 for 187-501
187-107 for 187-502
950750 for 187-501, 187-502

Optional accessories

No.	Description
187-105	Acute angle attachment, for Series 187
905338	Digimatic Cable, Flat Straight Type, 1m
905409	Digimatic Cable, Flat Straight Type, 2 m
02AZD790F	U-WAVE T Connection Cable F, Flat Straight Type
06ADV380F	USB Input Tool Direct (Digimatic USB) cable, 2m, Flat Straight Type

Consumable spares

No.	Description
05SAA217D	Lithium battery CR-2032, 1 pcs.

Series 187

This is a Digimatic Universal Protractor with data output that offers you the following features:
- It has an easy-to-read digital display.
- It automatically turns off after 10 minutes, and gives you fixed reference points for easy adjustment.
- You can slide and clamp the measuring blade over the entire length.
- You can make fine adjustments to precisely adjust arbitrary angle dimensions.
- It comes with a mounting facility on height gauges and tracers of series 192 via holder.

187-502

950750

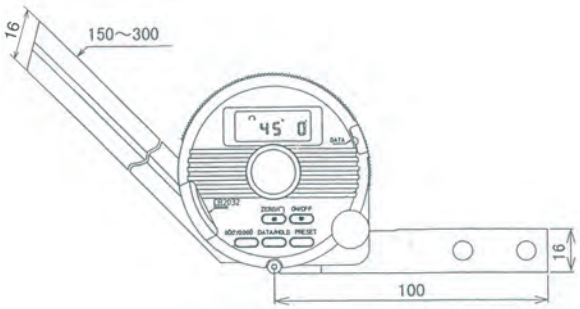

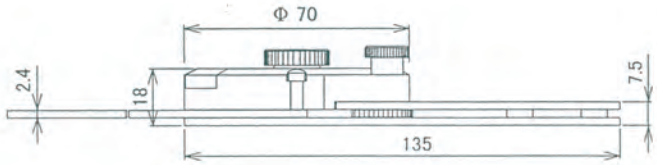

Metric

No.	Blade length	Mass [g]
187-501	150 mm	624
187-502	300 mm	662

Also available! Inch/Metric Models

All products to be sold to commercial customers. Product illustrations are without obligation. Product descriptions, in particular any and all technical specifications, are only binding when explicitly agreed upon. For suggested retail prices, please refer to the separate price list.

Mitutoyo

Precision Level

Series 960

– For use in setting machined surfaces precisely horizontal

960-601

No.	Sensibility (mm/m per division)	Sensibility "(Arcsecond)	Max. Permissible Error (inidication accuracy)	Flatness of reference face (bottom) [µm]	Mass [kg]
960-601	0,1	20"	20% of sensibility	5	1,57
960-602	0,05	10"	20% of sensibility	5	1,57
960-603	0,02	4"	5 µm/m	5	1,57

Specifications

Accuracy	DIN 2267
Dimensions (WxDxH)	200 x 44 x 39,3 mm
Vee angle	140°
Delivered	In a wooden case

Precision Frame Level

Series 960

This Precision Frame Level offers you the following benefits:
– You can set machined surfaces to precisely horizontal or vertical.
– It has 2 vee and 2 flat reference faces, and is precision ground.
– It features graduated main (longitudinal) and auxiliary (transverse) vials.

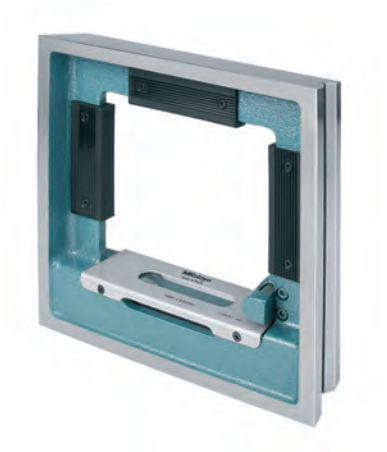

960-701

No.	Sensibility (mm/m per division)	Sensibility "(Arcsecond)	Max. Permissible Error (indication accuracy) [mm/m]	Flatness of reference faces [µm]	Parallelism of reference faces [µm]	Perpendicularity of reference faces [µm]	Mass [kg]
960-701	0,1	20	20% of sensibility	5	5	5	4
960-702	0,05	10	20% of sensibility	5	5	5	4
960-703	0,02	4	5 µm/m	3	3	3	4

Specifications

Accuracy	DIN 2267
Dimensions (WxDxH)	200 x 44 x 200 mm
Vee angle	140°
Delivered	In a wooden case

All products to be sold to commercial customers. Product illustrations are without obligation. Product descriptions, in particular any and all technical specifications, are only binding when explicitly agreed upon. For suggested retail prices, please refer to the separate price list.

Digital Precision Level

Series 950

This Digital Precision Level offers you the following benefits:
- You can measure flatness, squareness and angularity.
- Precision support surfaces in aluminium frame provide you with high rigidity and low weight.

950-317

No.	Max. permissible error (degrees)	Repeatability (degrees)	Model	Data output	Sensitivity (degrees)	Mass [g]
950-317	Horizontal : 0,1 Vertical : 0,2	0,1	Pro 360		0,1	300
950-318	0,05 (0 to 10) 0,1 (80 to 90) 0,2 (10 to 80)	0,05	Pro 3600	●	0,01 (0 to 9,99) 0,1 (10 to 90)	300

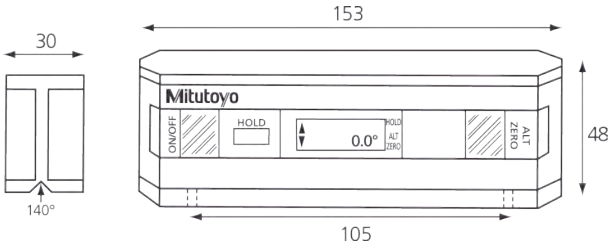

Distance between two M 3 x 0,5 mm Mounting holes

Specifications

Range	360° (4 x 90°)
Power supply	Standard battery (9 V) GLRG1
Battery life	ca. 500 hours
Delivered	Including box

Optional accessories

No.	Description
50AAA983A	RS-232C Output Cable, for series 950

- Note: 50AAA983A is for 950-318 only

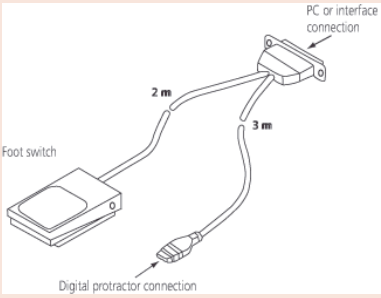

Thickness Gauge

Series 184 - Thickness Gauge

- Size clearly stamped on each leaf.
- Leaves are easy to remove and can be individually locked open.

184-304S

Metric

No.	Range	Accuracy	Number of leaves	Leaf length [mm]
184-304S	0,05-1 mm by 0,05 mm step	0,05 up to 0,15 mm : ±0,005 mm 0,2 up to 0,5 mm : ±0,012 mm 0,55 up to 1 mm : ±0,02 mm	20	150

All products to be sold to commercial customers. Product illustrations are without obligation. Product descriptions, in particular any and all technical specifications, are only binding when explicitly agreed upon. For suggested retail prices, please refer to the separate price list.

90° Steel Square

Series 916

This 90° Steel Square offers you the following benefits:
- Three types of square are available.
- It is hardened, and has precision ground edges.

Bevelled-edge square

No.	Length [mm]	Cross section [mm]	Remarks	Grade
916-105	50x40	14x4	stainless steel	00
916-106	75x50	15x4	stainless steel	00
916-107	100x70	20x5	stainless steel	00
916-108	150x100	25x6	stainless steel	00
916-109	200x130	30x7	stainless steel	00

Try square

No.	Length [mm]	Cross section [mm]	Remarks	Grade
916-202	75x50	15x5	stainless steel	0
916-203	100x70	20x5	stainless steel	0
916-204	150x100	25x5	stainless steel	0
916-205	200x130	30x6	stainless steel	0
916-206	250x165	35x7	stainless steel	0
916-207	300x200	40x8	stainless steel	0
916-208	400x265	45x10	stainless steel	0
916-209	500x330	50x10	stainless steel	0
916-222	75x50	15x5	steel	1
916-223	100x70	20x5	steel	1
916-224	150x100	25x5	steel	1
916-225	200x130	30x6	steel	1
916-226	250x165	35x7	steel	1
916-227	300x200	40x8	steel	1
916-228	400x265	45x10	steel	1
916-229	500x330	50x10	steel	1
916-231	50x40	15x5	steel	2
916-232	75x50	15x5	steel	2
916-233	100x70	20x5	steel	2
916-234	150x100	25x5	steel	2
916-235	200x130	30x6	steel	2
916-236	250x165	35x7	steel	2
916-237	300x175	35x7	steel	2
916-238	400x100	35x7	steel	2
916-239	500x150	40x8	steel	2

Try square with shoulders

No.	Length [mm]	Cross section [mm]	Remarks	Grade
916-311	75x50	15x5	stainless steel	0
916-312	100x70	20x5	stainless steel	0
916-313	150x100	25x5	stainless steel	0
916-314	200x130	30x6	stainless steel	0
916-315	250x165	35x7	stainless steel	0
916-316	300x200	40x8	stainless steel	0
916-317	400x265	45x10	stainless steel	0
916-318	500x330	50x10	stainless steel	0
916-321	75x50	15x5	steel	1
916-322	100x70	20x5	steel	1
916-323	150x100	25x5	steel	1
916-324	200x130	30x6	steel	1
916-325	250x165	35x7	steel	1
916-326	300x200	40x8	steel	1
916-327	400x265	45x10	steel	1
916-328	500x330	50x10	steel	1
916-332	100x70	20x5	steel	2
916-333	150x100	25x5	steel	2
916-334	200x130	30x6	steel	2
916-335	250x165	35x7	steel	2
916-336	300x175	35x7	steel	2
916-337	400x200	35x7	steel	2
916-338	500x250	40x8	steel	2

Specifications

Accuracy	According to DIN 875

Bevelled-edge square

Try square

Try square with shoulders

All products to be sold to commercial customers. Product illustrations are without obligation. Product descriptions, in particular any and all technical specifications, are only binding when explicitly agreed upon. For suggested retail prices, please refer to the separate price list.

Knife Edge Straight Edge

Specifications

Section	60°

Series 528

Series 528

This Knife Edge Straight Edge offers you the following benefits:
- Its straight edges are especially suited to testing the flatness of surfaces.
- It has a hardened, ground and micro lapped measuring edge.

No.	Range [mm]	Remarks	Accuracy
528-100	50	-	According to DIN 874
528-101	75	-	According to DIN 874
528-102	100	-	According to DIN 874
528-110	125	-	According to DIN 874
528-103	150	-	According to DIN 874
528-104	200	-	According to DIN 874
528-105	300	Supplied in a wooden case	According to DIN 874
528-106	400	Supplied in a wooden case	According to DIN 874
528-107	500	Supplied in a wooden case	According to DIN 874

Steel Rules

182-211

Series 182

These are fully and semi-flexible rules that offer you the following benefits:
- They have clear graduations on satin-chrome finish.
- The rules are stainless tempered.

Metric

Fully-flexible rule

No.	Range [mm]	Graduation	Width
182-211	150	1 mm. 5 mm (on both sides)	12 mm
182-231	300	1 mm. 5 mm (on both sides)	12 mm
182-251	450	1 mm. 5 mm (on both sides)	18 mm
182-271	600	1 mm. 5 mm (on both sides)	18 mm

Also available! Inch/Metric Models

Also available! Inch Models

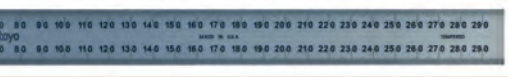

182-131

Series 182

These are wide, rigid types of steel rules that offer you the following benefits:
- They have clear graduations on satin-chrome finish.
- The rules are stainless tempered.

Metric

No.	Range [mm]	Graduation	Width
182-131	300	1 mm - 0,5 mm (on both faces)	25 mm
182-151	450	1 mm - 0,5 mm (on both faces)	30 mm
182-171	600	1 mm - 0,5 mm (on both faces)	30 mm

Also available! Inch/Metric Models

Also available! Inch Models

All products to be sold to commercial customers. Product illustrations are without obligation. Product descriptions, in particular any and all technical specifications, are only binding when explicitly agreed upon. For suggested retail prices, please refer to the separate price list.

Height Master
Page 325

Check Master
Page 329

Calibration Tools
Page 334

All products to be sold to commercial customers. Product illustrations are without obligation. Product descriptions, in particular any and all technical specifications, are only binding when explicitly agreed upon. For suggested retail prices, please refer to the separate price list.

Digital Height Master

Series 515

This is a standard model with a digital display, that offers you the following benefits:

- It gives you all the essential specifications required for a versatile height standard.
- You can use it to calibrate and set height gauges and other measuring instruments.
- Models have two measuring faces on the same level, one facing up and the other down.

Functions	Series 515
ZERO/ABS	●
DATA/HOLD	●
Auto Power OFF after 20 min. non use	●
Low voltage alarm	●
Data output	●
PRESET	●

Specifications

Digital step	0,001 mm
Block arrangement	Staggered
Block step	20 mm
Micrometer adjustment	20 mm
Micrometer feed	0,5 mm
Block pitch accuracy	0 < range ≤ 310 mm : ±1,5 µm 310 < range ≤ 450 mm : ±2,5 µm 450 < range ≤ 610 mm : ±3,5 µm
Parallelism of blocks	0 < range ≤ 310 mm : 2 µm 310 < range ≤ 610 mm : 2,5 µm
Graduation	0,002 mm
Battery life	approx. 1,8 years

Optional accessories

No.	Description
515-111	Auxiliary Block Kit for Bore Gauge, for 515-374/515-376/515-378
959149	Digimatic Cable, Straight, Data Button, 1m
959150	Digimatic Cable, Straight, Data Button, 2m
06ADV380C	USB Input Tool Direct (Digimatic USB), Straight, with Data Button
02AZD790C	U-WAVE T Connection Cable C, Straight, with Data Button

Consumable spares

No.	Description
938882	Battery SR44 1.5V

Staggered 20 mm blocks (movable)

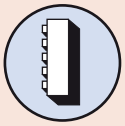

Vertical orientation

Riser block (optional)

515-374

Metric

No.	Range [mm]	Feed error	Retrace error	Total height [mm]	Mass [kg]
515-374	10-310	±2 µm	2 µm	480	9,5
515-376	10-460	±2 µm	2 µm	630	13,6
515-378	10-610	±2,5 µm	2,5 µm	785	16

Also available! Inch Models

All products to be sold to commercial customers. Product illustrations are without obligation. Product descriptions, in particular any and all technical specifications, are only binding when explicitly agreed upon. For suggested retail prices, please refer to the separate price list.

Height Master

Series 515

This height master offers you the following benefits:
- You can use it to calibrate and set height gauges and other measuring instruments.
- Models with the staggered arrangement of blocks have two measuring faces on the same level, one facing up and the other down.
- It is supplied in a fitted wooden case.

515-520

Using in horizontal orientation

Metric

No.	Range [mm]	Feed error	Retrace error	Mass [kg]
515-520	5-610	±1,2 µm	1,2 µm	45
515-523	5-1010	±1,5 µm	1,5 µm	63,5

Also available! Inch Models

Specifications

Block arrangement	Straight
Block step	10 mm
Micrometer adjustment	20mm
Micrometer feed	0,5mm
Block pitch accuracy	0 < range ≤ 310mm: ±1,5µm 310 < range ≤ 610mm: ±2,5µm 610 < range ≤ 1010mm: ±3,5µm
Parallelism of blocks	0 < range ≤ 610mm: 1,5µm 610 < range ≤ 1010mm: 2µm
Graduation	0,001 mm

Optional accessories

No.	Description
900574	Supporting Base for Vertical Operation, for Height Master
515-110	Auxiliary Block Kit for Bore Gauge, for 515-520/515-523

900574 : supplied as a standard for 515-523 and 515-513

Single-row 10 mm blocks (movable)

Vertical orientation

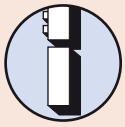

Riser block (optional)

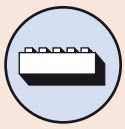

Horizontal orientation

900574 (optional)
Supporting base for vertical operation

All products to be sold to commercial customers. Product illustrations are without obligation. Product descriptions, in particular any and all technical specifications, are only binding when explicitly agreed upon. For suggested retail prices, please refer to the separate price list.

Universal Height Master

Series 515

This Universal Height Master offers you the following benefits:
- It is designed for both vertical and horizontal orientations, enabling you to carry out a wide range of applications such as accuracy checking of machine tool table movements.
- It is supplied in a fitted wooden case.

Specifications

Block arrangement	Staggered
Micrometer adjustment	20 mm
Micrometer feed	0,5 mm
Block pitch accuracy	±1,5 µm
Parallelism of blocks	1 µm
Graduation	0,001 mm

Optional accessories

No.	Description
515-112	Auxiliary Block Kit for Bore Gauge, for 515-322

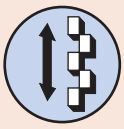

Staggered 20 mm blocks (movable)

Single-row 10 mm blocks (movable) 515-310

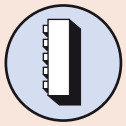

Vertical orientation

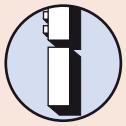

Riser block (optional)

515-322

Metric

No.	Range [mm]	Block step	Feed error	Retrace error	Mass [kg]
515-322	5-310	20 mm (staggered)	±1µm	1 µm	23

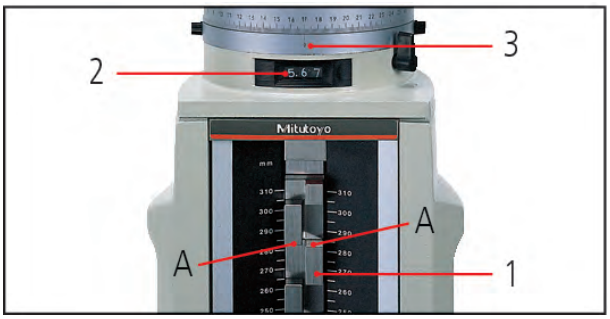

Height A
1. Scale 280.000 mm
2. Counter 5.670 mm
3. Thimble 0.000 mm

285.670 mm

All products to be sold to commercial customers. Product illustrations are without obligation. Product descriptions, in particular any and all technical specifications, are only binding when explicitly agreed upon. For suggested retail prices, please refer to the separate price list.

Optional Accessories for Height Master

Series 515

This is an auxiliary block kit that allows you to efficiently carry out reference-setting of dial bore gauges and tubular inside micrometers (18-150mm).

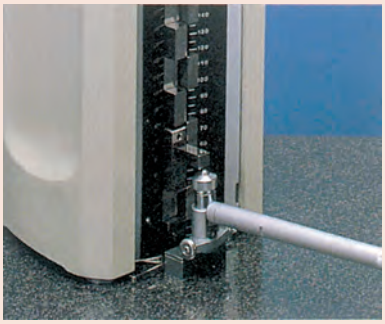

Bore gage reference setting

Metric

No.	Suitable for Height Master	Mass [g]
515-110	515-520 / 515-523	140
515-111	515-374 / 515-376 / 515-378	142
515-112	515-322	142

Also available! Inch Models

Series 515

These riser blocks offer you the following benefits:
- You can extend the measuring range up to 900mm by using 150, 300 or 600mm riser blocks.
- They can be used with both standard and digital Height Masters.

515-113

515-114

515-115

Sample application

Metric

No.	Accuracy	Height [mm]	Parallelism	Mass [kg]
515-113	±0,6 µm	150 mm	0,6 µm	5,7
515-114	±1 µm	300 mm	0,8 µm	11,3
515-115	±2 µm	600 mm	1 µm	31

Also available! Inch Models

All products to be sold to commercial customers. Product illustrations are without obligation. Product descriptions, in particular any and all technical specifications, are only binding when explicitly agreed upon. For suggested retail prices, please refer to the separate price list.

Depth Micro Checker

Specifications

Anvil block accuracy	±0,5 µm
Block pitch accuracy	±(1+L/150)µm L= lenght to check (mm)

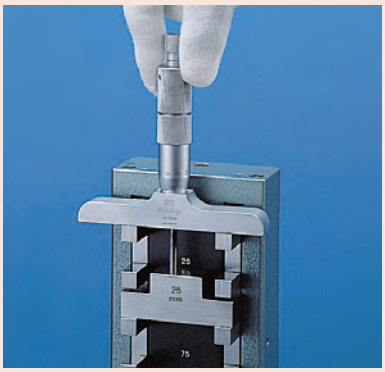

Series 515

This Depth Micro Checker offers you the following benefits:
- The Depth Micro Checker is designed to let you check and help set the range-end points of a depth micrometer.
- A 25mm carbide gauge block is provided as the reference surface.

515-571

Metric

No.	Range [mm]	Reference length	Mass [kg]
515-570	0-150	25, 50, 75, 100, 125, 150 mm	3
515-571	0-300	25, 50, 75, 100, 125, 150, 175, 200, 225, 250, 275, 300 mm	17

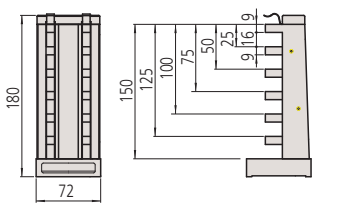

515-570

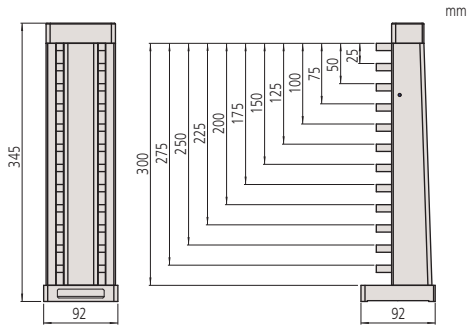

515-571

All products to be sold to commercial customers. Product illustrations are without obligation. Product descriptions, in particular any and all technical specifications, are only binding when explicitly agreed upon. For suggested retail prices, please refer to the separate price list.

CERA Caliper Checker

Series 515

This CERA Caliper Checker offers you the following benefits:
- You can set and inspect caliper and height gauges.
- It comes with ceramic gauge blocks.

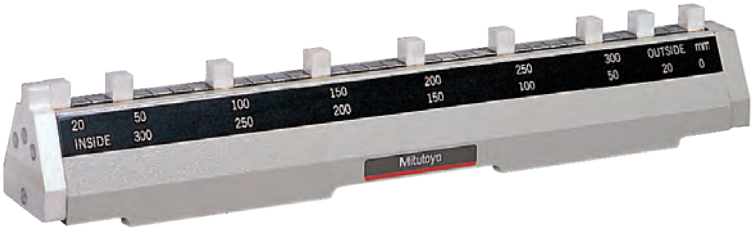

515-555

Metric

No.	Range [mm]	Reference checking lengths available for outside/inside measurement	Mass [kg]
515-555	0-300	20, 50, 100, 150, 200, 250 and 300 mm	4
515-556-2	0-600	20, 50, 100, 150, 200, 250, 300, 350, 400, 450, 500, 550 and 600 mm	8,5

Also available! Inch Models

515-555

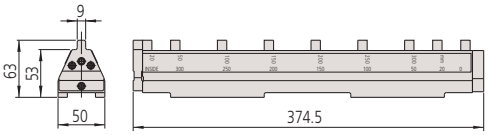

515-556-2

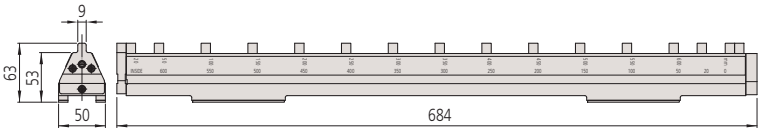

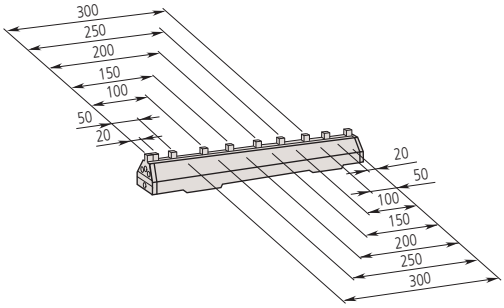

515-555

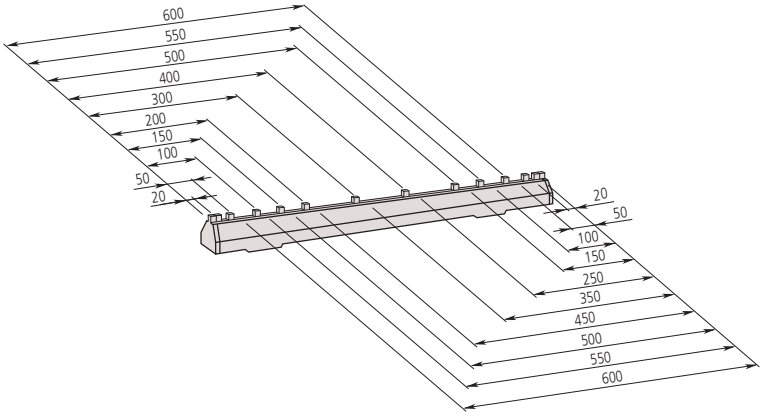

515-556-2

Specifications

Block pitch accuracy	Range ≤ 300 mm : ±0,005 mm Range ≤ 600 mm : ±0,007 mm
Parallelism of blocks	Range ≤ 300 mm : 0,002 mm Range ≤ 600 mm : 0,004 mm

Optional accessories

No.	Description
602162	Wooden Case (300 mm), for Caliper Checker
602164	Wooden Case (600 mm), for Caliper Checker

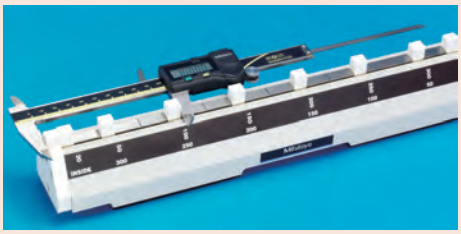

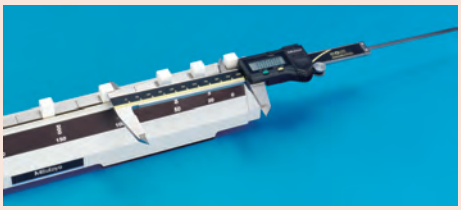

All products to be sold to commercial customers. Product illustrations are without obligation. Product descriptions, in particular any and all technical specifications, are only binding when explicitly agreed upon. For suggested retail prices, please refer to the separate price list.

Inside Micro Checker

Series 515

This Inside Micro Checker offers you the following benefits:
- Applicable for Series 133 only!
- It designed to act as a setting standard for inside micrometers.
- It comes with ceramic gauge blocks.

Specifications

Block pitch accuracy	±(1+L/150) µm L = Length to check (mm)
Delivered	With accessory set

Optional accessories

No.	Description
602160	Wooden Case, for Inside Micro Checker
602163	Wooden Case, 515-586

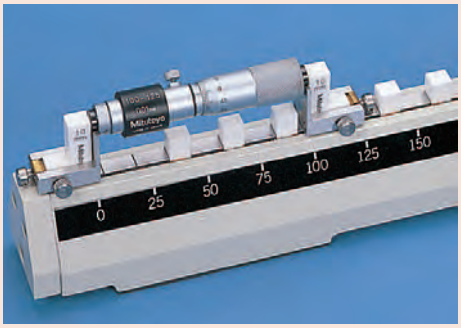

Application with Series 133 only.

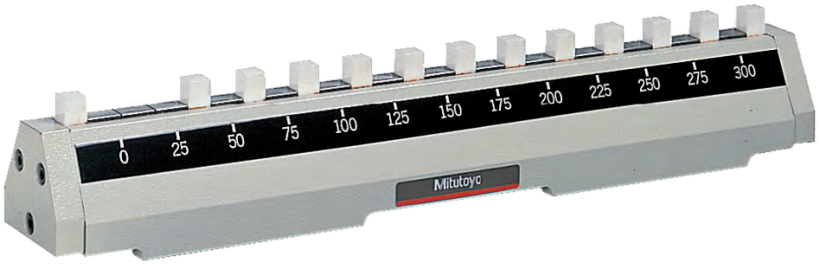

515-585

Metric

No.	Range [mm]	Reference length	Mass [kg]
515-585	25-300	25, 50, 75, 100, 125, 150, 175, 200, 225, 250, 275, 300 mm	3,9
515-586	25-600	25, 50, 75, 100, 125, 150, 175, 200, 225, 250, 275, 300, 325, 350, 375, 400, 425, 450, 475, 500, 525, 550, 575, 600 mm	7

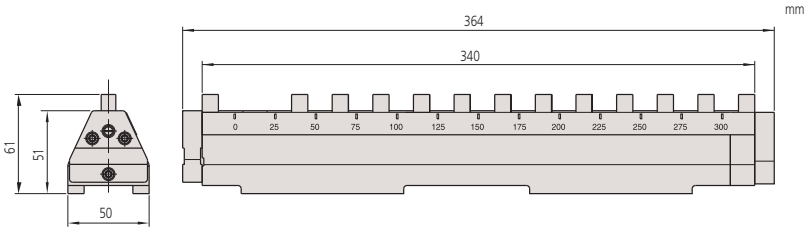

515-585

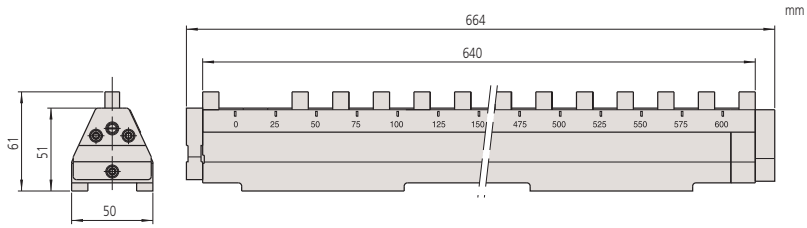

515-586

All products to be sold to commercial customers. Product illustrations are without obligation. Product descriptions, in particular any and all technical specifications, are only binding when explicitly agreed upon. For suggested retail prices, please refer to the separate price list.

Check Master

Series 515

This Check Master allows you to test precision tool and coordinate measuring machines, and offers you the following benefits:

- You can test the X, Y and Z-coordinate axes of precision tool machines and coordinate measuring machines.
- It consists of rigidly clamped gauge blocks with a step of 10mm.
- It is supplied in a fitted wooden case.

515-722

Metric

No.	Range [mm]	Mass [kg]
515-720	0-300	7
515-721	0-450	10
515-722	0-600	13
515-723	0-1000	22
515-724	0-1500	30

Also available! Inch Models

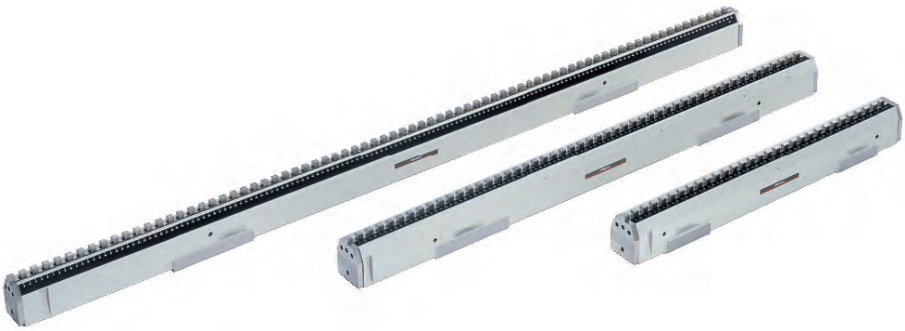

515-724 515-723 515-722

Specifications

Block step	10 mm
Block pitch accuracy	0 < range ≤ 310 mm : ±2,5 µm 310 < range ≤ 610 mm : ±3,5 µm 610 < range ≤ 1010 mm : ±5 µm 1010 < range ≤ 1510 mm : ±8 µm
Parallelism of blocks	0 < range ≤ 310 mm : 1,2 µm 310 < range ≤ 610 mm : 1,5 µm 610 < range ≤ 1010 mm : 2 µm 1010 < range ≤ 1510 mm : 2,5 µm
Hardness	More than 64 HRC
Delivered	In wooden box

Single-row 10 mm blocks

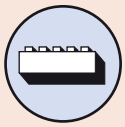

Horizontal orientation

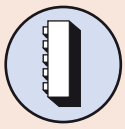

Vertical orientation

All products to be sold to commercial customers. Product illustrations are without obligation. Product descriptions, in particular any and all technical specifications, are only binding when explicitly agreed upon. For suggested retail prices, please refer to the separate price list.

High Accuracy Check Master

Series 515

This High Accuracy Check Master offers you the following benefits:
- You can use it to check the accuracy of table movements of machine tools and calibrate CMMs.
- It features a permanently wrung stack of gauge blocks housed in a rigid frame.
- You can use it in either vertical or horizontal orientation.
- With the Ceramic Check Master, each measuring block is made of zirconia-based ceramic that requires no anti-corrosion treatment for measuring faces.

515-743 515-742 515-740

Specifications

Block step	10 mm
Block pitch accuracy	0 < range ≤ 310 mm : ±1,2 µm 310 < range ≤ 610 mm : ±1,8 µm 610 < range ≤ 1010 mm : ±2,5 µm 1010 < range ≤ 1510 mm : ±4 µm
Parallelism of blocks	0 < range ≤ 450 mm : 1 µm 450 < range ≤ 1010 mm : 1,5 µm 1010 < range ≤ 1510 mm : 2 µm
Delivered	In a wooden box

Optional accessories

No.	Description
601167	Supporting Base for Vertical Operation, for Check Master

Single-row 10 mm blocks

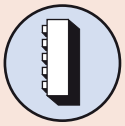

Vertical orientation

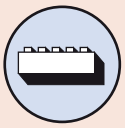

Horizontal orientation

601167 (optional)
Supporting base for vertical operation

Metric — Ceramic blocks

No.	Range [mm]	Mass [kg]
515-760	300	3,4
515-761	450	5,2
515-762	600	6,9
515-763	1000	11,5
515-764	1500	17,3

Metric — Steel blocks

No.	Range [mm]	Mass [kg]
515-740	300	3,6
515-741	450	5,4
515-742	600	7,2
515-743	1000	12
515-744	1500	18

Also available! Inch Models

All products to be sold to commercial customers. Product illustrations are without obligation. Product descriptions, in particular any and all technical specifications, are only binding when explicitly agreed upon. For suggested retail prices, please refer to the separate price list.

Mitutoyo

Step Master

Series 516

The Step Master is a gauge that provides you with four small increments in height and offers you the following benefits:

- It is constructed from an assembly of five highly accurate, steel or ceramic gauge blocks.
- Each adjacent step is calibrated to a resolution of 0,01 µm by using an interferometer with an accuracy tolerance of ±0,2 µm.
- Both steel and ceramic types are available.

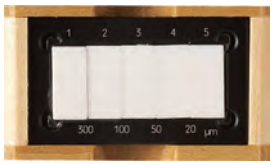

516-499 Ceramic type

516-498 Ceramic type

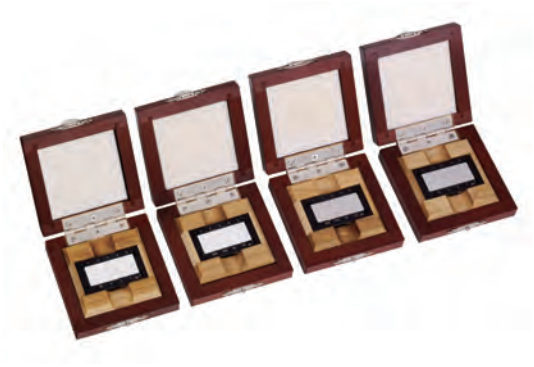

516-198 Steel type

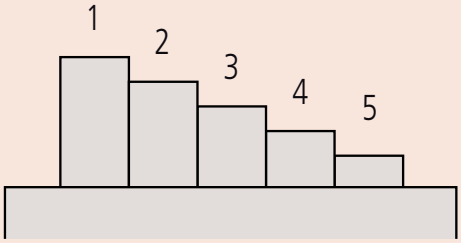

Step value

	1/2	2/3	3/4	4/5
516-198, 516-498	10 µm	5 µm	2 µm	1 µm
516-199, 516-499	300 µm	100 µm	50 µm	20 µm

Metric — Ceramic blocks

No.	Remarks
516-498	Ceramic type (step: 10, 5, 2, 1 µm)
516-499	Ceramic type (step: 300, 100, 50, 20 µm)

Metric — Ceramic blocks with Calibration certificate

No.	Remarks
516-499-64	Ceramic type (step: 300, 100, 50, 20 µm)

Metric — Steel blocks

No.	Remarks
516-198	Steel type (step: 10, 5, 2, 1 µm)
516-199	Steel type (step: 300, 100, 50, 20 µm)

Metric — Steel blocks with Calibration certificate

No.	Remarks
516-198-64	Steel type (step: 10, 5, 2, 1 µm)

mm

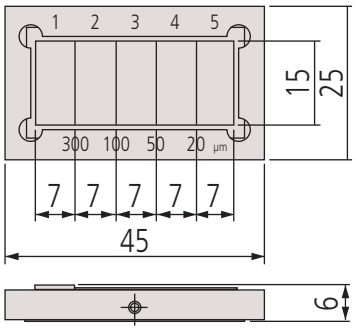

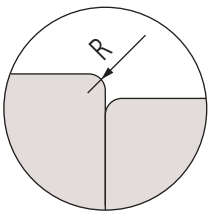

All products to be sold to commercial customers. Product illustrations are without obligation. Product descriptions, in particular any and all technical specifications, are only binding when explicitly agreed upon. For suggested retail prices, please refer to the separate price list.

Glass Scales

Specifications

Accuracy	(1,5+2L/1000) µm L = measured length (mm)
Material	Sodium glass
Thermal expansion coefficient	(8±1) x 10^{-6}/K

Series 182

These high precision glass scales offer you the following benefits:

- They are manufactured using Mitutoyo's leading-edge Linear Scale production technology.
- They are ideal for checking the magnification accuracy of profile projectors and microscopes, as well as the table feed accuracy of measuring equipment.

182-525-10 / 182-523-10 / 182-522-10 / 182-513-10

Metric

No.	Range [mm]	Graduation [mm]	Thickness of graduation line [µm]	L [mm]	Mass [kg]
182-511-10	50	0,1	20	75	0,23
182-512-10	100	0,1	20	125	0,24
182-521-10	100	0,5	50	130	0,27
182-513-10	150	0,1	20	175	0,35
182-514-10	200	0,1	20	225	0,36
182-522-10	200	0,5	50	230	0,32
182-531-10	250	1	100	280	0,55
182-523-10	300	0,5	50	330	0,57
182-524-10	400	0,5	50	430	0,71
182-525-10	500	0,5	50	530	0,86
182-532-10	500	1	100	530	0,86
182-533-10	750	1	100	780	1,22
182-534-10	1000	1	100	1030	1,54

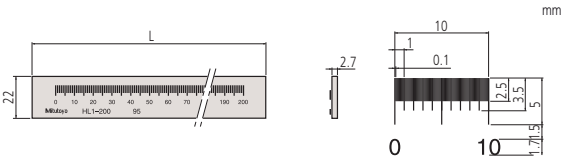

Graduation : 0,1 mm

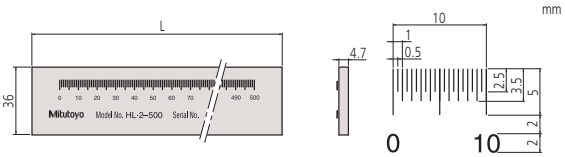

Graduation : 0,5 mm

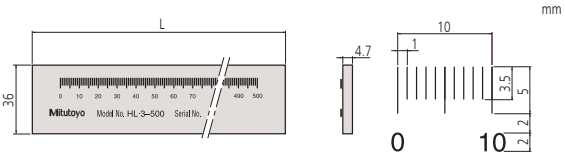

Graduation : 1 mm

All products to be sold to commercial customers. Product illustrations are without obligation. Product descriptions, in particular any and all technical specifications, are only binding when explicitly agreed upon. For suggested retail prices, please refer to the separate price list.

Low Expansion Glass Scales

Series 182

These high precision glass scales offer you the following benefits:
- They are manufactured using Mitutoyo's leading-edge Linear Scale production technology.
- You can use them as a standard for calibrating graduating scales, with high accuracy.

182-502-60
182-501-60

Metric

No.	Range [mm]	L [mm]	T [mm]	W [mm]	Mass [kg]
182-501-60	250	280	10	20	0,75
182-502-50	500	530	20	30	1,8
182-502-60	500	530	20	30	1,8

-60 : with JCSS certificate

mm

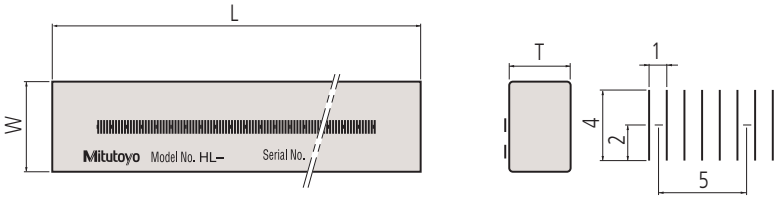

Specifications

Accuracy	(0,5+L/1000) µm L = measured length (mm)
Graduation	1 mm
Thickness of graduation line	4 µm
Material	Low expansion glass
Thermal expansion coefficient	(0±0,02) x 10^{-6}/K

All products to be sold to commercial customers. Product illustrations are without obligation. Product descriptions, in particular any and all technical specifications, are only binding when explicitly agreed upon. For suggested retail prices, please refer to the separate price list.

Calibration Tester

Series 170

This Calibration Tester offers you the following benefits:

- It enables you to test dial indicators, lever gauges and bore gauges with 0,01mm scale graduation.
- Bore gauges can be supported both horizontally and vertically.

Metric

No.	Range [mm]	Accuracy	Mass [kg]
170-102-12	0-25	±2 µm	7,5

Also available! Inch Models

170-102-12

Specifications

Graduation	0,001 mm
Measuring face	Carbide tipped, rotating

Optional accessories

No.	Description
12AAK824	Horizontal Holder for Bore Gauge, For Series 170

Series 521

This allows the calibration of digital and analogue indicators, lever gauges and measuring probes with a maximum measuring span of 5mm.

521-105

Metric

No.	Range [mm]	Accuracy	Mass [kg]
521-103	0-1	±0,2 µm	7
521-105	0-5	±0,8 µm	7,5

Also available! Inch Models

Specifications

Graduation	0,0002 mm
Repeatability	0,2 µm
Clamping range	Ø 4-10 mm

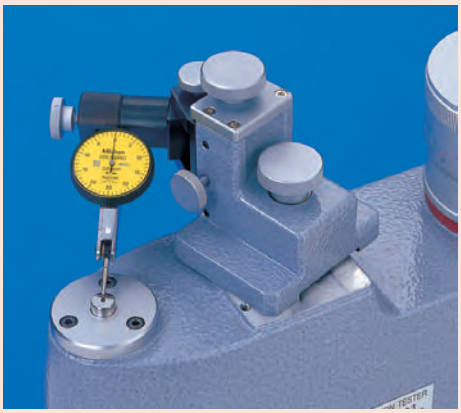

All products to be sold to commercial customers. Product illustrations are without obligation. Product descriptions, in particular any and all technical specifications, are only binding when explicitly agreed upon. For suggested retail prices, please refer to the separate price list.

Calibration Tester i-Checker 2000

Series 170

- i-Checker is specially designed to calibrate dial indicators, dial test indicators, bore gauges, electronic digital indicator gauges and other electronic gauges.
- Inspection can be performed 2,5 times faster compared to the previous model.
- This instrument achieves the high accuracy and therefore guarantees ultra-reliable inspection results.
- Digital indicators equipped with a data output function are checked very efficiently due to spindle positioning at the inspection points and recording of measurement results being under fully automatic control.
- Analog type indicators are inspected in semi-automatic mode with the pointer of the indicator being manually adjusted at each measuring point with automatic transfer of inspection results and movement to the next measuring point.

170-402D
with optional accessories

Metric

No.	Range [mm]	Remarks	Accuracy	Mass
170-402D	100	I-Pak software comfirms ISO, DIN, VDI/VDE/DGQ, JIS, JMAS, ANSI, ASME	±(0,1+4L/100) µm L = measured length (mm)	20 kg

Specifications

Digital step	0,01 µm
Scale	Linear encoder
Drive method	Motor drive, semi automatic, fully automatic only for indicator with data output
Dimensions (WxDxH)	196 x 205,5 x 599,5 mm
Power supply	100VAC to 240VAC ±10%, 50/60Hz
Max. drive speed	10 mm/s
Delivered	With ø8 mm stem bush, software i-Pak, certificate of inspection
PC connection	USB

Optional accessories

No.	Description
02ASK000	Test Indicator Accessory Set, I-Checker, For Ø6mm Stem
02ASK180	Test Indicator Accessory Set, I-Checker, For Ø8mm Stem
02ASK040	Stem Bush for I-Checker, For Ø6mm Stem
02ASL150	Stem Bush for I-Checker, For ø10mm Stem
02ASK060	Stem Bush for I-Checker, For Ø12mm Stem
02ASK070	Stem Bush for I-Checker, For Ø15mm Stem
02ASK080	Stem Bush for I-Checker, For Ø20mm Stem
02ASK710	Stem Bush for I-Checker, For Ø28mm Stem
02ASK090	Stem Bush for I-Checker, For Ø9,525mm (3/8") Stem
02ASU162	Cylinder Gauge Set, IC-2000

Calibration of Dial Test Indicator (Lever Type) with optional accessories

All products to be sold to commercial customers. Product illustrations are without obligation. Product descriptions, in particular any and all technical specifications, are only binding when explicitly agreed upon. For suggested retail prices, please refer to the separate price list.

Gauge Block Comparator GBCD-250

Specifications

Resolution	0,00001 mm (0,01 µm)
Measuring unit	Laser Hologage (upper, lower)
Measuring force	0,7N (upper) 0,2N (lower)

Series 565

This Manual Comparator with Dual Gauge Heads offers you the following benefits:
- It performs gauge block calibration according to EN ISO 3650.
- You can easily compare gauge blocks between 0,1mm and 250mm with reference gauge blocks.
- The upper and lower gauging heads give you of easy, high-accuracy measurement.

No.	Range [mm]
565-150D-01	0,1-250

Cylindrical Measuring Pin

Specifications

Accuracy	DIN 2269
Finish	Very fine ground, from Ø 3 mm inscribed
Hardness	HRC 60-62
Roughness	≤ 0,1 µm Ra
Length [mm]	up to Ø 6 mm = 50 mm over Ø 6 mm = 70 mm
Delivered	In a wooden box

Series 926

This is a complete incremental set of plug (or pin) gauges, that offers you the following benefits:
- It includes 91 or 273 pieces that you can use in the inspection room, or on the shop floor in tool and fixture making.

926-210

926-222

Set of 273 pieces

No.	Accuracy grade	Remarks
926-210	1	1-10 mm, rising by 0,1mm 0mm (size); +0,01mm (oversize) and -0,01mm (undersize)
926-212	2	1-10 mm, rising by 0,1mm 0mm (size); +0,01mm (oversize) and -0,01mm (undersize)

Set of 91 pieces

No.	Accuracy grade	Remarks
926-220	1	1-10mm, rising by 0,1mm
926-222	2	1-10mm, rising by 0,1mm

All products to be sold to commercial customers. Product illustrations are without obligation. Product descriptions, in particular any and all technical specifications, are only binding when explicitly agreed upon. For suggested retail prices, please refer to the separate price list.

Mitutoyo

Steel Gauge Block Sets
Page 341

Steel individual Gauge Blocks
Page 348

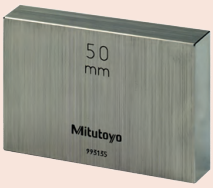

CERA Gauge Block Sets
Page 350

CERA Individual Gauge Blocks
Page 353

Special Gauge Blocks
Page 354

Accessories for Gauge Blocks
Page 356

All products to be sold to commercial customers. Product illustrations are without obligation. Product descriptions, in particular any and all technical specifications, are only binding when explicitly agreed upon. For suggested retail prices, please refer to the separate price list.

Gauge Blocks Overview

CERA Blocks

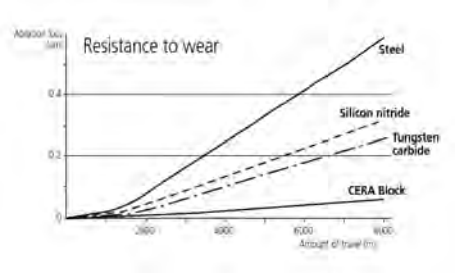

CERA Blocks - Abrasion Resistant

CERA Blocks - Non magnetic

Series 516

Precision gauge blocks are the primary standards vital to dimensional quality control in the manufacture of parts. Mitutoyo offers an extensive selection of gauge blocks available in a choice of rectangular or square, metric or inch, and steel or ceramic types.

Accuracy

Gauge blocks offered by Mitutoyo have such a high accuracy that users can use them complete confidence. Needless to say, Mitutoyo has established a traceability system for our measurement products, up to the Metrology Management Center of the National Institute of Advanced Industrial Science and Technology (AIST) and we have been certified by the Japanese government as an accredited laboratory.

Wringing

The lapping technique is one of Mitutoyo's specialties. Our advanced technique, developed over more than a half century, enables us to achieve the best flatness and surface roughness needed for gauge blocks and thus maximize the wringing force.

Abrasion Resistance and Dimensional Stability of Steel blocks

High-carbon high-chrome steel is employed to satisfy a variety of the material characteristics required for gauge blocks. Our advanced heat treatment technology for steel blocks, which involves repeated high and low temperature cycles, simultaneously achieves excellent abrasion resistance and reduces change in length over time to the minimum.

CERA Blocks

CERA blocks are made of a ceramic material with a superior surface finish, created by Mitutoyo's ultra-precision machining techniques, that provides a premium quality block.

1. Corrosion Resistant

Anti-corrosion treatment is not required when handled normally (i.e. with fingers), resulting in simple maintenance and storage.

2. No Burrs Caused by Dents, etc.

Since the CERA Block is very hard, it will not scratch and is highly resistant to burrs. If a burr is formed, it can easily be removed with a ceramic deburring stone (Ceraston).

3. Abrasion Resistant

CERA Blocks have 10 times the abrasion resistance of steel gauge blocks.

4. Dimensionally Stable

CERA Blocks are free from dimensional change over time.

5. Sizes Clearly Marked

Black characters, indicating the nominal length, are inscribed by laser and are clearly visible against the white surface of the block.

6. Non-magnetic Nature Prevents Steel Swarf Contamination

7. High Wringing Force

Superior flatness and surface finish

8. Superior Material Characteristics of CERA Block

Property / Material	CERA Block (ZrO_2)	Steel (Fe)	Carbide (WC-Co)	Silicon nitride (Si_3N_4)
Hardness (HV)	**1350**	800	1650	1500
Coefficient of thermal expansion (10^{-6}/K)	**9,3±0,5**	10,8±0,5	5,5±1,0	2
Flexural strength (MPa)	**1270**	1960	1960	580
Fracture toughness K1c (MPa•$m^{1/2}$)	**7**	120	12	6,5
Young's modulus x10^4 (MPa)	**20,6**	20,6	61,8	28,4
Poisson's ratio	**0,3**	0,3	0,2	0,3
Specific gravity	**6,0**	7,8	14,8	3,2
Thermal conductivity (W/m•k)	**2,9**	54,4	79,5	16,7

Selecting Gauge Blocks

Gauge blocks are designed to offer the construction of practically any size, within the range of a set, using the minimum number of blocks. Long block sets are available if a longer length is required than is provided by the standard sets.

Gauge block sets should be selected in accordance with the minimum length step required. Wear block sets should be used if the application is likely to involve rapid wear of the end blocks in a stack (and the minimum sizes required allow this). This will preserve the life of the set by confining wear to the wear blocks, whose cost of replacement is far less than that of a complete set.

If a set containing a large number of gauge blocks is selected, the number of gauge blocks required for any particular length may be reduced and the number of combinations is increased. Accuracy will be retained and wear will be reduced.

Dedicated gauge block sets for micrometer inspection and caliper inspection are available.

All products to be sold to commercial customers. Product illustrations are without obligation. Product descriptions, in particular any and all technical specifications, are only binding when explicitly agreed upon. For suggested retail prices, please refer to the separate price list.

Gauge Blocks Overview

Series 516

9. Closest Expansion Coefficient to Steel
The thermal expansion coefficient of a CERA Block is quite similar to that of a steel gauge block.
10. Highly Resistant to Dropping and Impact
The CERA Block material is one of the toughest ceramics. It is extremely difficult to crack a CERA block in normal use.

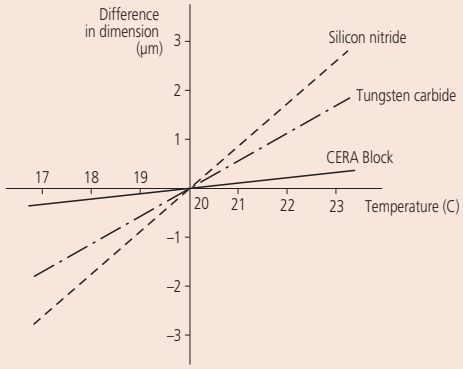

Differences in the dimension between some materials and steel that are obtained when measuring testpieces with a length of 100 mm at each temperature.

Grade and Application
The following information can be used to select the gauge block grade according to usage (specified by DIN861, BS4311, JIS B 7506 and EN ISO 3650).
Grade 2:
These gauge blocks are intended for shop floor use to set and calibrate fixtures as well as precision instruments.
Grade 1:
This grade is used within an inspection area to verify the accuracy of plug and snap gauges as well as for setting electronic measuring devices.
Grade 0:
These higher accuracy gauges are intended for use within a controlled environment by skilled inspection staff. Mainly used as reference standards for setting high precision measuring equipment and for the calibration of lower grade gauge blocks.
Grade K:
Gauge blocks of this accuracy are intended for use within a temperature controlled inspection room or calibration laboratory. They should be used as masters with certificates against other gauge blocks which are calibrated by comparison.

Certificates
ILAC
The International Laboratory Accrediation Cooperation is an international cooperation of laboratory and inspection accrediation bodies. The member bodies signed the ILAC MMutual Recognition Arrangement (MRA) which ensures a cross approval of certificates from accredited laboratories from other countries. The Signatories to the ILAC arrangement are almost all European countries.

JCSS
Mitutoyo Gauge Block Sets can be delivered with a JCSS Certificate of Calibration (Japan Calibration Service System). A JCSS Certificate of Calibration is comparable with e.g. DAkks, COFRAC, RvA or UKAS Certificate of Calibration. Refer to ILAC this calibration result may be accepted internationally.

All products to be sold to commercial customers. Product illustrations are without obligation. Product descriptions, in particular any and all technical specifications, are only binding when explicitly agreed upon. For suggested retail prices, please refer to the separate price list.

Steel Gauge Block Set - 1 mm Base

Specifications

Accuracy	EN ISO 3650

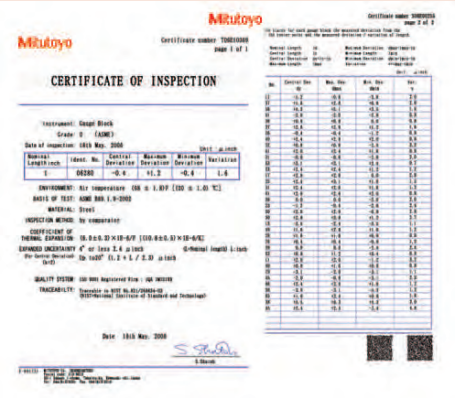

Inspection Certificate

Series 516 - 1 Base

This table shows the most popular configurations for this type of set. For details of other configurations available please contact Mitutoyo.

Inspection certificate

Steel 112-block set

Steel 103-block set

Steel 47-block set

Blocks per Set	No.	Grade	Block allocation Size	Step	Quantity
122	**516-597-10**	0	1,0005	-	1
	516-598-10	1	1,001 - 1,009	0,001	9
	516-599-10	2	1,01 - 1,49	0,01	49
			1,6 - 1,9	0,1	4
			0,5 - 24,5	0,5	49
			30 - 100	10	8
			25, 75	-	2
112	**516-938-10**	0	1,0005	-	1
	516-939-10	1	1,001 - 1,009	0,001	9
	516-940-10	2	1,01 - 1,49	0,01	49
			0,5 - 24,5	0,5	49
			25 - 100	25	4
103	**516-942-10**	0	1,005	-	1
	516-943-10	1	1,01 - 1,49	0,01	49
	516-944-10	2	0,5 - 24,5	0,5	49
			25 - 100	25	4
87	**516-946-10**	0	1,001 - 1,009	0,001	9
	516-947-10	1	1,01 - 1,49	0,01	49
	516-948-10	2	0,5 - 9,5	0,5	19
			10 - 100	10	10
47	**516-958-10**	0	1,005	-	1
	516-959-10	1	1,01 - 1,09	0,01	9
	516-960-10	2	1,1 - 1,9	0,1	9
			1 - 24	1	24
			25 - 100	25	4
47	**516-962-10**	0	1,005	-	1
	516-963-10	1	1,01 - 1,19	0,01	19
	516-964-10	2	1,2 - 1,9	0,1	8
			1 - 9	1	9
			10 - 100	10	10
46	**516-995-10**	0	1,001 - 1,009	0,001	9
	516-996-10	1	1,01 - 1,09	0,01	9
	516-997-10	2	1,1 - 1,9	0,1	9
			1 - 9	1	9
			10 - 100	10	10
32	**516-966-10**	0	1,005	-	1
	516-967-10	1	1,01 - 1,09	0,01	9
	516-968-10	2	1,1 - 1,9	0,1	9
			1 - 9	1	9
			10 - 30	10	3
			60	-	1
8	**516-115-10**	0	25 - 200	25	8
	516-116-10	1			
	516-117-10	2			

All products to be sold to commercial customers. Product illustrations are without obligation. Product descriptions, in particular any and all technical specifications, are only binding when explicitly agreed upon. For suggested retail prices, please refer to the separate price list.

Steel Gauge Block Set - 1 mm Base with JCSS Certificate

Series 516 - 1 Base

This table shows the most popular configurations for this type of set.
For details of other configurations available please contact Mitutoyo.

Calibration certificate

Blocks per Set	No.	Grade	Block allocation Size	Step	Quantity
122	**516-596-60**	K	1,0005	-	1
	516-597-60	0	1,001 - 1,009	0,001	9
	516-598-60	1	1,01 - 1,49	0,01	49
	516-599-60	2	1,6 - 1,9	0,1	4
			0,5 - 24,5	0,5	49
			30 - 100	10	8
			25, 75	-	2
112	**516-937-60**	K	1,0005	-	1
	516-938-60	0	1,001 - 1,009	0,001	9
	516-939-60	1	1,01 - 1,49	0,01	49
	516-940-60	2	0,5 - 24,5	0,5	49
			25 - 100	25	4
103	**516-941-60**	K	1,005	-	1
	516-942-60	0	1,01 - 1,49	0,01	49
	516-943-60	1	0,5 - 24,5	0,5	49
	516-944-60	2	25 - 100	25	4
87	**516-945-60**	K	1,001 - 1,009	0,001	9
	516-946-60	0	1,01 - 1,49	0,01	49
	516-947-60	1	0,5 - 9,5	0,5	19
	516-948-60	2	10 - 100	10	10
47	**516-957-60**	K	1,005	-	1
	516-958-60	0	1,01 - 1,09	0,01	9
	516-959-60	1	1,1 - 1,9	0,1	9
	516-960-60	2	1 - 24	1	24
			25 - 100	25	4
47	**516-961-60**	K	1,005	-	1
	516-962-60	0	1,01 - 1,19	0,01	19
	516-963-60	1	1,2 - 1,9	0,1	8
	516-964-60	2	1 - 9	1	9
			10 - 100	10	10
46	**516-994-60**	K	1,001 - 1,009	0,001	9
	516-995-60	0	1,01 - 1,09	0,01	9
	516-996-60	1	1,1 - 1,9	0,1	9
	516-997-60	2	1 - 9	1	9
			10 - 100	10	10
32	**516-965-60**	K	1,005	-	1
	516-966-60	0	1,01 - 1,09	0,01	9
	516-967-60	1	1,1 - 1,9	0,1	9
	516-968-60	2	1 - 9	1	9
			10 - 30	10	3
			60	-	1
8	**516-701-60**	K	125 - 175	25	3
	516-702-60	0	200 - 250	50	2
	516-703-60	1	300 - 500	100	3
	516-704-60	2			
8	**516-115-60**	0	25 - 200	25	8
	516-116-60	1			
	516-117-60	2			

Specifications

Accuracy	EN ISO 3650

Steel 112-block set

Steel 103-block set

Steel 47-block set

JCSS Calibration Certificate

These Gauge Block Sets are delivered with a JCSS Calibration Certificate (Japan Calibration Service System).
A JCSS Certificate of Calibration is comparable with e.g. DAkkS COFRAC, RVA or UKAS Certificate of Calibration.
This calibration result is accepted internationally.

All products to be sold to commercial customers. Product illustrations are without obligation. Product descriptions, in particular any and all technical specifications, are only binding when explicitly agreed upon. For suggested retail prices, please refer to the separate price list.

Steel Gauge Block Set - Thin Blocks

Specifications

Accuracy	EN ISO 3650

Steel 18-block set

Suffix No. (-X) for Selecting Certificate Provided

ISO/DIN/JIS

Suffix No.	Inspection Certificate	Calibration Certificate JCSS
1	○	—
6	○	○

Series 516

– Thin block set, 0,001 mm step, 0,05 mm step

Ordering example: To order an ISO Standard 18-block grade 1 set with calibration certificate, choose No. 516-975-60.

Inspection Certificate

Calibration Certificate

Blocks per Set	No.	Standard / grade available and Suffix No. * ISO/DIN/JIS	Block allocation Size	Step	Quantity
18	516-974	(Grade 0): -X0	0,991 - 0,999	0,001	9
	516-975	(Grade 1): -X0	1,001 - 1,009	0,001	9
	516-976	(Grade 2): -X0			
9	516-981	(Grade K): -X0	1,001 - 1,009	0,001	9
	516-982	(Grade 0): -X0			
	516-983	(Grade 1): -X0			
	516-984	(Grade 2): -X0			
9	516-985	(Grade K): -X0	0,991 - 0,999	0,001	9
	516-986	(Grade 0): -X0			
	516-987	(Grade 1): -X0			
	516-988	(Grade 2): -X0			
9	516-990	(Grade 0): -XO	0,1 - 0,5	0,05	9
	516-991	(Grade 1): -XO			
	516-992	(Grade 2): -XO			

Carbide Wear Block Set

Specifications

Accuracy	EN ISO 3650

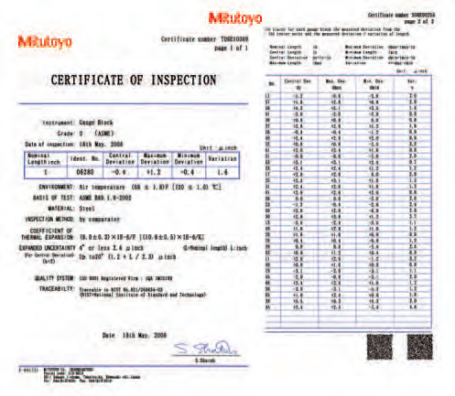

Inspection Certificate

Series 516 - Carbide Wear Block sets

Inspection Certificate

Carbide 2-block set

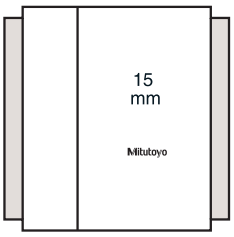

Protection gauge blocks (highlighted in grey above) are placed at each end of the gauge block stack to absorb the wear caused by contact with workpieces.

Blocks per Set	No.	Grade	Block allocation Size	Step	Quantity
2	516-807-10	0	1	-	2
	516-806-10	1			
2	516-803-10	0	2	-	2
	516-802-10	1			

All products to be sold to commercial customers. Product illustrations are without obligation. Product descriptions, in particular any and all technical specifications, are only binding when explicitly agreed upon. For suggested retail prices, please refer to the separate price list.

Steel Micrometer Inspection Gauge Block Set

Series 516

Calibration certificate

Inspection certificate

With calibration certificate

Blocks per Set	No.	Grade	Calibration/Standard applications	Block allocation
10	516-580-60 516-581-60 516-582-60	0 1 2	For Micrometer with 2 mm spindle pitch. (QuantuMike)	2,2/ 4,8/ 7,8/ 10,4/ 12/ 15,2/ 17,4/ 19,6/ 22,6/ 25 mm
10	516-106-60 516-107-60 516-108-60	0 1 2	EN ISO 3611 DIN 863 (1999) VDI/VDE/DGQ 2618	2,5/ 5,1/ 7,7/ 10,3/ 12,9/ 15/ 17,6/ 20,2/ 22,8/ 25 mm, optical parallel (thickness = 12 mm)
10	516-135-60 516-136-60 516-137-60	0 1 2	EN ISO 3611 DIN 863 (1999) VDI/VDE/DGQ 2618	2,5/ 5,1/ 7,7/ 10,3/ 12,9/ 15/ 17,6/ 20,2/ 22,8/ 25 mm, Micro Checker, optical parallel (thickness = 12 mm)

With inspection certificate

Blocks per Set	No.	Grade	Calibration/Standard applications	Block allocation
10	516-580-10 516-581-10 516-582-10	0 1 2	For Micrometer with 2 mm spindle pitch. (QuantuMike)	2,2/ 4,8/ 7,8/ 10,4/ 12/ 15,2/ 17,4/ 19,6/ 22,6/ 25 mm
10	516-106-10 516-107-10 516-108-10	0 1 2	EN ISO 3611 DIN 863 (1999) VDI/VDE/DGQ 2618	2,5/ 5,1/ 7,7/ 10,3/ 12,9/ 15/ 17,6/ 20,2/ 22,8/ 25 mm, optical parallel (thickness = 12 mm)
10	516-135-10 516-136-10 516-137-10	0 1 2	EN ISO 3611 DIN 863 (1999) VDI/VDE/ DGQ 2618	2,5/ 5,1/ 7,7/ 10,3/ 12,9/ 15/ 17,6/ 20,2/ 22,8/ 25 mm, Micro Checker, optical parallel (thickness = 12 mm)

Specifications

Accuracy	EN ISO 3650

516-107-10

Micro checker
(See separate entry later in this chapter for a detailed description)

Steel Caliper Inspection Gauge Block Set

Series 516

Inspection certificate

Blocks per Set	No.	Grade	Mass	Calibration/Standard applications	Block allocation
4	516-526-10 516-527-10	1 2	1,72 1,72	EN ISO 13385-1	4 blocks : 10, 30, 50, 125 mm, setting ring with inspection certificate (Ø4 mm, Ø10 mm), pin gauge (Ø 10 mm), glove
3	516-124-10 516-125-10	1 2	1,72 1,72	DIN 862 (1988) VDI/VDE/DGQ 2618	3 blocks : 30, 41,3, 131,4 mm, setting ring without inspection certificate (Ø4 mm, Ø25 mm), glove

516-526

516-124

All products to be sold to commercial customers. Product illustrations are without obligation. Product descriptions, in particular any and all technical specifications, are only binding when explicitly agreed upon. For suggested retail prices, please refer to the separate price list.

Micrometer Inspection Gauge Block Stand

Series 516 - Micro Checker

This micro checker offers you the following benefits
- For securely holding a stack of gauge blocks to be used for micrometer inspection.
- Can be used vertically and horizontally.
- Parallelism of micrometer measuring faces is checked by optical parallel which can be attached to the stand for convenience in handling.

516-607 with optional gauge blocks

Metric

Micro Checker (stand only)

No.	Applicable gauge block sets	Applicable gauge block size [mm]
516-607	516-106-xx, 516-107-xx, 516-108-xx, 516-156-xx, 516-157-xx, 516-158-xx	2,5/ 5,1/ 7,7/ 10,3/ 12,9/ 15/ 17,6/ 20,2/ 22,8/ 25

All products to be sold to commercial customers. Product illustrations are without obligation. Product descriptions, in particular any and all technical specifications, are only binding when explicitly agreed upon. For suggested retail prices, please refer to the separate price list.

Steel Metric Individual Gauge Block

Metric Blocks ≤ 1.19 mm

Ordering example: To order a 0,1mm ISO Standard grade 1 block with JCSS calibration certificate, choose No. 611821-036.

Calibration Certificate

Inspection Certificate

Length [mm]	No.	Length [mm]	No.	Length [mm]	No.
0,1	611821	0,53	611894	0,96	611937
0,11	611860	0,54	611895	0,97	611938
0,12	611861	0,55	611896	0,98	611939
0,13	611862	0,56	611897	0,99	611940
0,14	611863	0,57	611898	0,991	611551
0,15	611822	0,58	611899	0,992	611552
0,16	611864	0,59	611900	0,993	611553
0,17	611865	0,6	611901	0,994	611554
0,18	611866	0,61	611902	0,995	611555
0,19	611867	0,62	611903	0,996	611556
0,2	611823	0,63	611904	0,997	611557
0,21	611868	0,64	611905	0,998	611558
0,22	611869	0,65	611906	0,999	611559
0,23	611870	0,66	611907	1	611611
0,24	611871	0,67	611908	1,0005	611520
0,25	611824	0,68	611909	1,001	611521
0,26	611872	0,69	611910	1,002	611522
0,27	611873	0,7	611911	1,003	611523
0,28	611874	0,71	611912	1,004	611524
0,29	611875	0,72	611913	1,005	611525
0,3	611825	0,73	611914	1,006	611526
0,31	611876	0,74	611915	1,007	611527
0,32	611877	0,75	611916	1,008	611528
0,33	611878	0,76	611917	1,009	611529
0,34	611879	0,77	611918	1,01	611561
0,35	611826	0,78	611919	1,02	611562
0,36	611880	0,79	611920	1,03	611563
0,37	611881	0,8	611921	1,04	611564
0,38	611882	0,81	611922	1,05	611565
0,39	611883	0,82	611923	1,06	611566
0,4	611827	0,83	611924	1,07	611567
0,41	611884	0,84	611925	1,08	611568
0,42	611885	0,85	611926	1,09	611569
0,43	611886	0,86	611927	1,1	611570
0,44	611887	0,87	611928	1,11	611571
0,45	611828	0,88	611929	1,12	611572
0,46	611888	0,89	611930	1,13	611573
0,47	611889	0,9	611931	1,14	611574
0,48	611890	0,91	611932	1,15	611575
0,49	611891	0,92	611933	1,16	611576
0,5	611506	0,93	611934	1,17	611577
0,51	611892	0,94	611935	1,18	611578
0,52	611893	0,95	611936	1,19	611579

For prices please refer to the online catalogue

For prices please refer to the online catalogue

For prices please refer to the online catalogue

For prices please refer to the online catalogue

Specifications

Accuracy	EN ISO 3650
Delivered	Foamed material 0,1-500 mm in a wooden case 600-1000 mm

Suffix No. (-XXX) for Selecting Certificate Provided

ISO/DIN/JIS

Suffix No.	Grade	Inspection Certificate	Calibration Certificate JCSS
-016	K	O	O
-021	0	O	—
-026	0	O	O
-031	1	O	—
-036	1	O	O
-041	2	O	—
-046	2	O	O

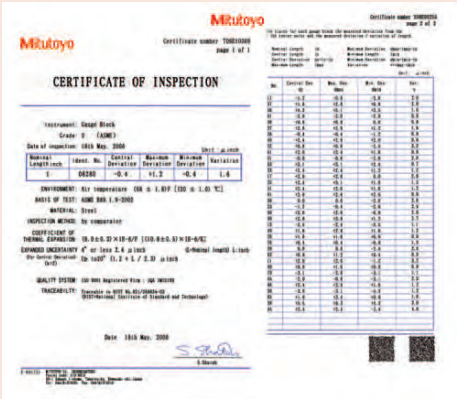

Inspection Certificate

JCSS Calibration Certificate

These Gauge Block Sets are delivered with a JCSS Certificate of Calibration (Japan Calibration Service System).
A JCSS Certificate of Calibration is comparable with e.g. DAkkS COFRAC, RVA or UKAS Certificate of Calibration.
This calibration result is accepted internationally.

All products to be sold to commercial customers. Product illustrations are without obligation. Product descriptions, in particular any and all technical specifications, are only binding when explicitly agreed upon. For suggested retail prices, please refer to the separate price list.

Steel Metric Individual Gauge Block

Metric Blocks ≤ 1000 mm

Inspection certificate

Calibration certificate

Suffix No. (-XXX) for Selecting Certificate Provided

ISO/DIN/JIS

Suffix No.	Grade	Inspection Certificate	Calibration Certificate JCSS
-016	K	○	○
-021	0	○	—
-026	0	○	○
-031	1	○	—
-036	1	○	○
-041	2	○	—
-046	2	○	○

mm

0.1mm - 5.5mm

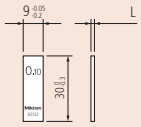

Nominal length: 0.1 mm - 5.5 mm

mm

6mm - 10mm

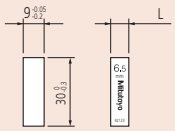

Nominal length: 6 mm - 10 mm

mm

10.3mm - 100mm

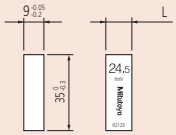

Nominal length: 10.3 mm - 100 mm

mm

125 mm - 1000 mm (5" - 20")

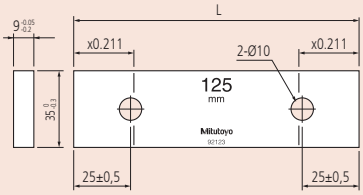

Nominal length: 125 mm - 1000 mm

Length [mm]	No.
1,2	611580
1,21	611581
1,22	611582
1,23	611583
1,24	611584
1,25	611585
1,26	611586
1,27	611587
1,28	611588
1,29	611589
1,3	611590
1,31	611591
1,32	611592
1,33	611593
1,34	611594
1,35	611595
1,36	611596
1,37	611597
1,38	611598
1,39	611599
1,4	611600
1,41	611601
1,42	611602
1,43	611603
1,44	611604
1,45	611605
1,46	611606
1,47	611607
1,48	611608
1,49	611609
1,5	611641
1,6	611516
1,7	611517
1,8	611518
1,9	611519
2	611612
2,0005	611690
2,001	611691
2,002	611692
2,003	611693
2,004	611694
2,005	611695
2,006	611696
2,007	611697
2,008	611698
2,009	611699
2,01	611701
2,02	611702
2,03	611703
2,04	611704
2,05	611705
2,06	611706
2,07	611707
2,08	611708
2,09	611709
2,1	611710
2,11	611711
2,12	611712
2,13	611713
2,14	611714

For prices please refer to the online catalogue

Length [mm]	No.
2,15	611715
2,16	611716
2,17	611717
2,18	611718
2,19	611719
2,2	611720
2,21	611721
2,22	611722
2,23	611723
2,24	611724
2,25	611725
2,26	611726
2,27	611727
2,28	611728
2,29	611729
2,3	611730
2,31	611731
2,32	611732
2,33	611733
2,34	611734
2,35	611735
2,36	611736
2,37	611737
2,38	611738
2,39	611739
2,4	611740
2,41	611741
2,42	611742
2,43	611743
2,44	611744
2,45	611745
2,46	611746
2,47	611747
2,48	611748
2,49	611749
2,5	611642
2,6	611750
2,7	611751
2,8	611752
2,9	611753
3	611613
3,5	611643
4	611614
4,5	611644
5	611615
5,1	611850
5,5	611645
6	611616
6,5	611646
7	611617
7,5	611647
7,7	611851
8	611618
8,5	611648
9	611619
9,5	611649
10	611671
10,3	611852
10,5	611650
11	611621

For prices please refer to the online catalogue

Length [mm]	No.
11,5	611651
12	611622
12,5	611652
12,9	611853
13	611623
13,5	611653
14	611624
14,5	611654
15	611625
15,5	611655
16	611626
16,5	611656
17	611627
17,5	611657
17,6	611854
18	611628
18,5	611658
19	611629
19,5	611659
20	611672
20,2	611855
20,5	611660
21	611631
21,5	611661
22	611632
22,5	611662
22,8	611856
23	611633
23,5	611663
24	611634
24,5	611664
25	611635
25,25	611754
30	611673
35	611755
40	611674
41,3	611857
45	611756
50	611675
60	611676
70	611677
75	611801
80	611678
90	611679
100	611681
125	611802
131,4	611858
150	611803
175	611804
200	611682
250	611805
300	611683
400	611684
500	611685
600	611840
700	611841
750	611842
800	611843
900	611844
1000	611845

For prices please refer to the online catalogue

All products to be sold to commercial customers. Product illustrations are without obligation. Product descriptions, in particular any and all technical specifications, are only binding when explicitly agreed upon. For suggested retail prices, please refer to the separate price list.

CERA Gauge Block Set

Series 516 - 1 Base

Ordering example: To order an ISO Standard 112-block grade 1 set with JCSS calibration certificate choose 516-339-60.

Calibration certificate

Inspection certificate

Blocks per Set	No.	Standard / grade available and Suffix No. * ISO/DIN/JIS	Block allocation Size	Step	Quantity
112	516-337	(Grade K): -X0	1,0005	-	1
	516-338	(Grade 0): -X0	1,001 - 1,009	0,001	9
	516-339	(Grade 1): -X0	1,01 - 1,49	0,01	49
	516-340	(Grade 2): -X0	0,5 - 24,5	0,5	49
			25 - 100	25	4
103	516-341	(Grade K): -X0	1,005	-	1
	516-342	(Grade 0): -X0	1,01 - 1,49	0,01	49
	516-343	(Grade 1): -X0	0,5 - 24,5	0,5	49
	516-344	(Grade 2): -X0	25 - 100	25	4
88	516-370	(Grade 0): -X0	1,0005	-	1
	516-371	(Grade 1): -X0	1,001 - 1,009	0,001	9
	516-372	(Grade 2): -X0	1,01 - 1,49	0,01	49
			0,5 - 9,5	0,5	19
			10 - 100	10	10
87	516-345	(Grade K): -X0	1,001 - 1,009	0,001	9
	516-346	(Grade 0): -X0	1,01 - 1,49	0,01	49
	516-347	(Grade 1): -X0	0,5 - 9,5	0,5	19
	516-348	(Grade 2): -X0	10 - 100	10	10
76	516-349	(Grade K): -X0	1,005	-	1
	516-350	(Grade 0): -X0	1,01 - 1,49	0,01	49
	516-351	(Grade 1): -X0	0,5 - 9,5	0,5	19
	516-352	(Grade 2): -X0	10 - 40	10	4
			50 - 100	25	3
56	516-353	(Grade K): -X0	0,5	-	1
	516-354	(Grade 0): -X0	1,001 - 1,009	0,001	9
	516-355	(Grade 1): -X0	1,01 - 1,09	0,01	9
	516-356	(Grade 2): -X0	1,1 - 1,9	0,1	9
			1 - 24	1	24
			25 - 100	25	4
47	516-357	(Grade K): -X0	1,005	-	1
	516-358	(Grade 0): -X0	1,01 - 1,09	0,01	9
	516-359	(Grade 1): -X0	1,1 - 1,9	0,1	9
	516-360	(Grade 2): -X0	1 - 24	1	24
			25 - 100	25	4
47	516-361	(Grade K): -X0	1,005	-	1
	516-362	(Grade 0): -X0	1,01 - 1,19	0,01	19
	516-363	(Grade 1): -X0	1,2 - 1,9	0,1	8
	516-364	(Grade 2): -X0	1 - 9	1	9
			10 - 100	10	10
46	516-394	(Grade K): -X0	1,001 - 1,009	0,001	9
	516-395	(Grade 0): -X0	1,01 - 1,09	0,01	9
	516-396	(Grade 1): -X0	1,1 - 1,9	0,1	9
	516-397	(Grade 2): -X0	1 - 9	1	9
			10 - 100	10	10
34	516-178	(Grade K): -X0	1,0005	-	1
	516-179	(Grade 0): -X0	1,001 - 1,009	0,001	9
	516-180	(Grade 1): -X0	1,01 - 1,09	0,01	9
	516-181	(Grade 2): -X0	1,1 - 1,9	0,1	9
			1 - 5	1	5
			10	-	1
32	516-365	(Grade K): -X0	1,005	-	1
	516-366	(Grade 0): -X0	1,01 - 1,09	0,01	9
	516-367	(Grade 1): -X0	1,1 - 1,9	0,1	9
	516-368	(Grade 2): -X0	1 - 9	1	9
			10 - 30	10	3
			60	-	1
8	516-731	(Grade K): -XO	125 - 175	25	3
	516-732	(Grade 0): -XO	200 - 250	50	2
	516-734	(Grade 2): -XO	300 - 500	100	3
	516-733	(Grade 1): -XO			

Specifications

Accuracy	EN ISO 3650

Suffix No. (-X) for Selecting Certificate Provided

ISO/DIN/JIS

Suffix No.	Inspection Certificate	Calibration Certificate JCSS
1	○	—
6	○	○

Suffix No. 1: Not available for Grade K sets.

CERA 112-block set

CERA 56-block set

CERA 32-block set

All products to be sold to commercial customers. Product illustrations are without obligation. Product descriptions, in particular any and all technical specifications, are only binding when explicitly agreed upon. For suggested retail prices, please refer to the separate price list.

CERA Gauge Block Set - Thin Blocks

Specifications

Accuracy	EN ISO 3650

Suffix No. (-X) for Selecting Certificate Provided

ISO/DIN/JIS

Suffix No.	Inspection Certificate	Calibration Certificate JCSS
1	○	—
6	○	○

Suffix No. 1: Not available for Grade K sets.

Series 516 - 0.001 step

These block sets offer you the following benefits:
- Thin block set, 0,001mm step.
- Ordering example: To order an ISO Standard 18-block grade 1 set with calibration certificate, choose 516-375-60.

Calibration certificate

Inspection certificate

CERA 18-block set

CERA 9-block

Blocks per Set	No.	Standard / grade available and Suffix No. * ISO/DIN/JIS	Block allocation Size	Step	Quantity
18	516-373	(Grade K): -X0	0,991 - 0,999	0,001	9
	516-374	(Grade 0): -X0	1,001 - 1,009	0,001	9
	516-375	(Grade 1): -X0			
	516-376	(Grade 2): -X0			
9	516-381	(Grade K): -X0	1,001 - 1,009	0,001	9
	516-382	(Grade 0): -X0			
	516-383	(Grade 1): -X0			
	516-384	(Grade 2): -X0			
9	516-385	(Grade K): -X0	0,991 - 0,999	0,001	9
	516-386	(Grade 0): -X0			
	516-387	(Grade 1): -X0			
	516-388	(Grade 2): -X0			

CERA Wear Block Set

Specifications

Accuracy	EN ISO 3650

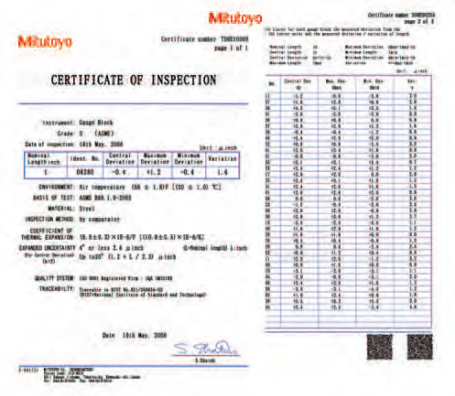

Mitutoyo Gauge Blocks and Inspection Certificates

A Inspection Certificate is furnished with all Mitutoyo gauge blocks with a serial number on the box (in the case of sets) and an identification number on each block. The deviation of each block from nominal length, at the time of inspection, is stated. For this inspection, each gauge block is measured relative to the upper level master using a gauge block comparator. Grade K gauge blocks are measured by a primary measurement method using an interferometer.

Series 516 - Cera Wear block sets

Inspection certificate

CERA 2-block set

Protection gauge blocks (highlighted in grey above) are placed at each end of the gauge block stack to absorb the wear caused by contact with workpieces.

Blocks per Set	No.	Grade	Block allocation Size	Step	Quantity
2	516-832-10	0	1	-	2
	516-833-10	1			
2	516-830-10	0	2	-	2
	516-831-10	1			

All products to be sold to commercial customers. Product illustrations are without obligation. Product descriptions, in particular any and all technical specifications, are only binding when explicitly agreed upon. For suggested retail prices, please refer to the separate price list.

CERA Micrometer Inspection Gauge Block Set

Series 516

Calibration certificate

Inspection certificate

Specifications

Accuracy	EN ISO 3650

516-391-10

Micro checker 516-607 applicable gauge block sets 516-156, 516-157, 516-158

With calibration certificate

Blocks per Set	No.	Grade	Calibration/Standard applications	Block allocation
10	**516-390-60** **516-391-60** **516-392-60**	0 1 2	Especially for Micrometer with 2 mm spindle pitch (QuantuMike)	2,2/ 4,8/ 7,8/ 10,4/ 12/ 15,2/ 17,4/ 19,6/ 22,6/ 25 mm
10	**516-156-60** **516-157-60** **516-158-60**	0 1 2	EN ISO 3611 DIN 863 (1999) VDI/VDE/DGQ 2618	2,5/ 5,1/ 7,7/ 10,3/ 12,9/ 15/ 17,6/ 20,2/ 22,8/ 25 mm, optical parallel (thickness = 12 mm)
10	**516-185-60** **516-186-60** **516-187-60**	0 1 2	EN ISO 3611 DIN 863 (1999) VDI/VDE/DGQ 2618	2,5/ 5,1/ 7,7/ 10,3/ 12,9/ 15/ 17,6/ 20,2/ 22,8/ 25 mm, Micro Checker, optical parallel (thickness = 12 mm)

With inspection certificate

Blocks per Set	No.	Grade	Calibration/Standard applications	Block allocation
10	**516-390-10** **516-391-10** **516-392-10**	0 1 2	Especially for Micrometer with 2 mm spindle pitch. (QuantuMike)	2,2/ 4,8/ 7,8/ 10,4/ 12/ 15,2/ 17,4/ 19,6/ 22,6/ 25 mm
10	**516-156-10** **516-157-10** **516-158-10**	0 1 2	EN ISO 3611 DIN 863 (1999) VDI/VDE/DGQ 2618	2,5/ 5,1/ 7,7/ 10,3/ 12,9/ 15/ 17,6/ 20,2/ 22,8/ 25 mm, optical parallel (thickness = 12 mm)
10	**516-185-10** **516-186-10** **516-187-10**	0 1 2	EN ISO 3611 DIN 863 (1999) VDI/VDE/DGQ 2618	2,5/ 5,1/ 7,7/ 10,3/ 12,9/ 15/ 17,6/ 20,2/ 22,8/ 25 mm, Micro Checker, optical parallel (thickness = 12 mm)

CERA Caliper Inspection Gauge Block Set

Series 516

Inspection certificate

516-566-10

Blocks per Set	No.	Grade	Calibration/Standard applications	Block allocation
4	**516-566-10** **516-567-10**	1 2	EN ISO 13385-1	4 blocks : 10, 30, 50, 125 mm, setting ring with inspection certificate (Ø4 mm, Ø10 mm), pin gauge (Ø 10 mm), glove
3	**516-150-10** **516-151-10**	1 2	DIN 862 (1988) VDI/VDE/DGQ 2618	3 blocks : 30, 41,3, 131,4 mm, setting ring without inspection certificate (Ø4 mm, Ø25 mm), glove

All products to be sold to commercial customers. Product illustrations are without obligation. Product descriptions, in particular any and all technical specifications, are only binding when explicitly agreed upon. For suggested retail prices, please refer to the separate price list.

CERA Individual Gauge Block

Metric Blocks

Ordering example: To order a 0,5mm ISO Standard grade 1 block with JCSS calibration certificate, choose 613506-036.

Calibration certificate

Inspection certificate

Specifications

Accuracy	EN ISO 3650
Delivered	Foamed material 0,5-100 mm in a wooden case 125-500 mm

Suffix No. (-XXX)
for Selecting Certificate Provided

ISO/DIN/JIS

Suffix No.	Grade	Inspection Certificate	Calibration Certificate JCSS
-016	K	O	O
-021	0	O	—
-026	0	O	O
-031	1	O	—
-036	1	O	O
-041	2	O	—
-046	2	O	O

mm

0.1mm - 5.5mm

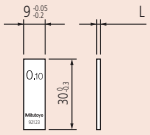

Nominal length: 0.1 mm - 5.5 mm

mm

6mm - 10mm

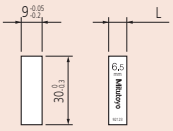

Nominal length: 6 mm - 10 mm

mm

10.3mm - 100mm

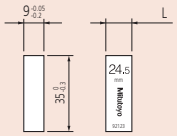

Nominal length: 10.3 mm - 100 mm

mm

125 mm - 1000 mm (5" - 20")

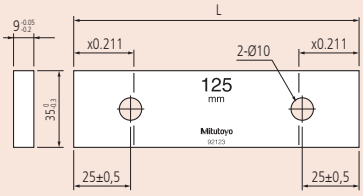

Nominal length: 125 mm - 1000 mm

Length [mm]	No.	Length [mm]	No.	Length [mm]	No.
0,5	613506	1,3	613590	12,9	613853
0,991	613551	1,31	613591	13	613623
0,992	613552	1,32	613592	13,5	613653
0,993	613553	1,33	613593	14	613624
0,994	613554	1,34	613594	14,5	613654
0,995	613555	1,35	613595	15	613625
0,996	613556	1,36	613596	15,5	613655
0,997	613557	1,37	613597	16	613626
0,998	613558	1,38	613598	16,5	613656
0,999	613559	1,39	613599	17	613627
1	613611	1,4	613600	17,5	613657
1,0005	613520	1,41	613601	17,6	613854
1,001	613521	1,42	613602	18	613628
1,002	613522	1,43	613603	18,5	613658
1,003	613523	1,44	613604	19	613629
1,004	613524	1,45	613605	19,5	613659
1,005	613525	1,46	613606	20	613672
1,006	613526	1,47	613607	20,2	613855
1,007	613527	1,48	613608	20,5	613660
1,008	613528	1,49	613609	21	613631
1,009	613529	1,5	613641	21,5	613661
1,01	613561	1,6	613516	22	613632
1,02	613562	1,7	613517	22,5	613662
1,03	613563	1,8	613518	22,8	613856
1,04	613564	1,9	613519	23	613633
1,05	613565	2	613612	23,5	613663
1,06	613566	2,5	613642	24	613634
1,07	613567	3	613613	25	613635
1,08	613568	3,5	613643	25,25	613754
1,09	613569	4	613614	30	613673
1,1	613570	4,5	613644	35	613755
1,11	613571	5	613615	40	613674
1,12	613572	5,1	613850	41,3	613857
1,13	613573	5,5	613645	45	613756
1,14	613574	6	613616	50	613675
1,15	613575	6,5	613646	60	613676
1,16	613576	7	613617	70	613677
1,17	613577	7,5	613647	75	613801
1,18	613578	7,7	613851	80	613678
1,19	613579	8	613618	90	613679
1,2	613580	8,5	613648	100	613681
1,21	613581	9	613619	125	613802
1,22	613582	9,5	613649	131,4	613858
1,23	613583	10	613671	150	613803
1,24	613584	10,3	613852	175	613804
1,25	613585	10,5	613650	200	613682
1,26	613586	11	613621	250	613805
1,27	613587	11,5	613651	300	613683
1,28	613588	12	613622	400	613684
1,29	613589	12,5	613652	500	613685

For prices please refer to the online catalogue

For prices please refer to the online catalogue

For prices please refer to the online catalogue

For prices please refer to the online catalogue

All products to be sold to commercial customers. Product illustrations are without obligation. Product descriptions, in particular any and all technical specifications, are only binding when explicitly agreed upon. For suggested retail prices, please refer to the separate price list.

Gauge Blocks with a Calibrated CTE

Gauge Blocks with a Calibrated Coefficient of Thermal Expansion

These are metric gauge blocks with a calibrated coefficient of thermal expansion. They offer you the following benefits:

- Mitutoyo offers top-level gauge blocks (steel and ceramic) which are superior to K class blocks, with their quality supported by Mitutoyo's best technologies.
- They feature an accurately calibrated thermal expansion coefficient measured with a proprietary double-faced interferometer (DFI).
- Each gauge block is calibrated for length on a highly accurate gauge block interferometer (GBI) system.
- Uncertainty of thermal expansion coefficient: 0,035 x 10-6 /K (k=2).
- Uncertainty of length measurement: 30 nm (k=2), for 100mm blocks.

Calibration Certificate

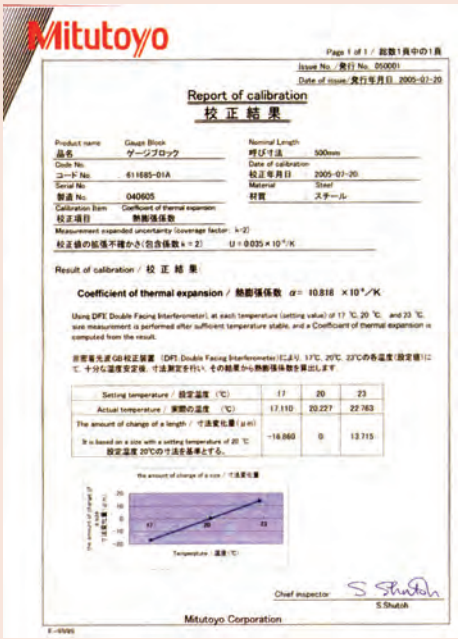

To each final dimension a factory certificate is supplied.

Cera

No.	Length [mm]	Accuracy
613681-01B	100	Grade K JIS/DIN/ISO
613802-01B	125	Grade K JIS/DIN/ISO
613803-01B	150	Grade K JIS/DIN/ISO
613804-01B	175	Grade K JIS/DIN/ISO
613682-01B	200	Grade K JIS/DIN/ISO
613805-01B	250	Grade K JIS/DIN/ISO
613683-01B	300	Grade K JIS/DIN/ISO
613684-01B	400	Grade K JIS/DIN/ISO
613685-01B	500	Grade K JIS/DIN/ISO

Steel

No.	Length [mm]	Accuracy
611681-01B	100	Grade K JIS/DIN/ISO
611802-01B	125	Grade K JIS/DIN/ISO
611803-01B	150	Grade K JIS/DIN/ISO
611804-01B	175	Grade K JIS/DIN/ISO
611682-01B	200	Grade K JIS/DIN/ISO
611805-01B	250	Grade K JIS/DIN/ISO
611683-01B	300	Grade K JIS/DIN/ISO
611684-01B	400	Grade K JIS/DIN/ISO
611685-01B	500	Grade K JIS/DIN/ISO

All products to be sold to commercial customers. Product illustrations are without obligation. Product descriptions, in particular any and all technical specifications, are only binding when explicitly agreed upon. For suggested retail prices, please refer to the separate price list.

ZERO CERA Blocks

Specifications

Material	Ultra-low thermal expansion fine ceramic 826HV10*2
Grade*1	K
Standard accessories	Inspection certificate, Calibration certificate and custom-made aluminium case
Coefficient of thermal expansion	0 ± 0,02 x 10^{-6}/K (at 20°C)*2
Density*2	2,5 g/cm³

*1
If you require a grade other than K, please contact Mitutoyo.
*2
Value claimed by the material supplier.

Ultra-low Expansion Ceramic Gauge Blocks

Calibration certificate

These are ultra-low expansion ceramic gauge blocks.
The ZERO CERA Blocks offer you the following benefits:
- Thermal expansion at 20 ±1°C is less than 1/500 that of steel.
- There is almost no secular change either in the dimension or coefficient of thermal expansion.
- You will find them light and easy to handle.
- They are rust free.
- They are magnetisation free.

No.	Accuracy	Length [mm]
617673-016	Grade K ISO/JIS/DIN	30
617675-016	Grade K ISO/JIS/DIN	50
617681-016	Grade K ISO/JIS/DIN	100
617682-016	Grade K ISO/JIS/DIN	200
617683-016	Grade K ISO/JIS/DIN	300
617684-016	Grade K ISO/JIS/DIN	400
617685-016	Grade K ISO/JIS/DIN	500
617840-016	Grade K ISO/JIS/DIN	600
617841-016	Grade K ISO/JIS/DIN	700
617843-016	Grade K ISO/JIS/DIN	800
617844-016	Grade K ISO/JIS/DIN	900
617845-016	Grade K ISO/JIS/DIN	1000
516-771-60	Grade K ISO/JIS/DIN	Above set

Characteristics comparison of gauge block materials

	ZERO CERA BLOCK	Low expansion glass	CERA BLOCK	Steel	Tungsten carbide
Coefficient of thermal expansion (10^{-6}/K)	0 ± 0,02 *2) *3)	0 ± 0,02 *2) *3)	9,3 ± 0,5	10,8 ± 0,5	5,5 ± 1
Thermal conductivity (W/m*K)	3,7	1,7	2,9	54,4	79,5
Specify gravity	2,5	2,55	6	7,8	14,8
Young modulus (GPa)	130	90	206	206	618
Poisson ratio	0,3	0,25	0,3	0,3	0,2
Flexural strength (3 points) (MPa)	210	143	1270	1960	1960
Fracture toughness (MPa*$m^{1/2}$)	1,2	0,69 *4)	7	120	12
Vickers hardness (HV)	826 *3)	680	1350	800	1650

1) Material for Mitutoyo Products
2) Value at 20°C
3) Claimed value by the material supplier
4) Value measured by the material supplier (reference)

All products to be sold to commercial customers. Product illustrations are without obligation. Product descriptions, in particular any and all technical specifications, are only binding when explicitly agreed upon. For suggested retail prices, please refer to the separate price list.

Gauge Block Accessories

Series 516

Specially designed for long gauge blocks over 100 mm which have two coupling holes on the body.

516-605

No.	Included in set
516-605	Holder A (**619031**)-1 pc Holder B (**619032**)-1 pc Holder C (**619033**)-1 pc Holder D (**619034**)-1 pc Holder E (**619035**)-1 pc Adapter (**619036**)-3 pcs Holder base 35mm (**619009**)-1 pc Half-round jaw 12mm (**619013**)-2 pcs Plain jaw (**619018**)-2 pcs Scriber point (**619019**)-1 pc

Holder A : 619031
Used for coupling two long gauge blocks.

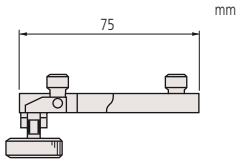

619031

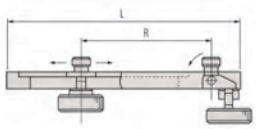

619032 / 619033

Holder B and C :
Used for coupling two long gauge blocks together with other gauge blocks up to 35 mm (Holder B) or 140 mm Holder C). Also used for attaching jaws with two adapters.
Holder B : 619032 (R max.= 90 mm- L= 126 mm)
Holder C : 619033 (R max.= 200 mm- L= 236 mm)

Holder D : 619034
Used for attaching to the holder base.

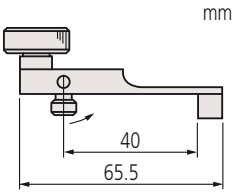

619034

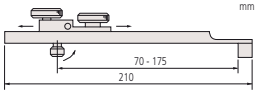

Holder E : 619035
Used for attaching to the holder base together with other gauge blocks up to 125 mm. Used for attaching jaws with one adapter.

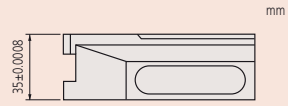

Holder base : 619009

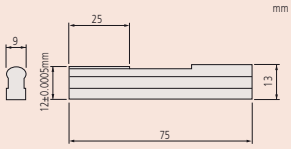

Half-round jaw : 619013

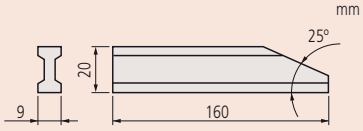

Plain jaw : 619018

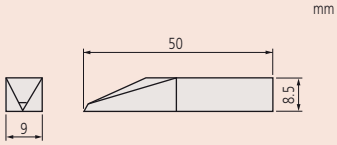

Scriber point : 619019

All products to be sold to commercial customers. Product illustrations are without obligation. Product descriptions, in particular any and all technical specifications, are only binding when explicitly agreed upon. For suggested retail prices, please refer to the separate price list.

Gauge Block Accessories

Series 619

These accessories are specially designed for long gauge blocks over 100mm which have two coupling holes on the body.

516-601J

516-602J

1. Set

No.	Included in set
516-601J	(1 x 619003; 1 x 619004; 1 x 619005; 1 x 619009; 2 x 619010; 2 x 619011; 2 x 619012; 2 x 619013; 2 x 619014; 2 x 619018; 1 x 619019; 1 x 619020; 2 x 619021; 1 x 619022; 1 x 619023)
516-602J	(1 x 619002; 1 x 619003; 1 x 619004; 1 x 619005; 1 x 619009; 2 x 619010; 2 x 619011; 2 x 619012; 1 x 619019; 1 x 619020; 1 x 619022)

2. Holder

No.	L [mm]
619002	15-60
619003	5-100
619004	15-160
619005	20-250

3. Holder base

No.	Description
619009	35 mm

4. Half-round jaw

No.	Size	A [mm]	B [mm]	C [mm]	H [mm]
619010	Half-round jaw 2 mm	5,5	40	7,5	2 ±0,0005
619011	Half-round jaw 5 mm	14	45	7,5	5 ±0,0005
619012	Half-round jaw 8 mm	18,5	50	8,5	8 ±0,0005
619013	Half-round jaw 12 mm	25	75	13	12 ±0,0005
619014	Half-round jaw 20 mm	25	125	20,5	20 ±0,0005

5. Miscellaneous jaws

No.	Description
619018	Plain jaw
619019	Scriber point
619020	Centre point
619021	Tram point

6. Triangular straight edge

No.	A [mm]
619022	16
619023	19,5

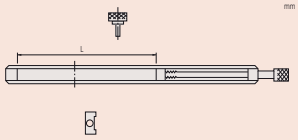

Holder : 619002 to 619005
Used to clamp plain jaws, a scriber point, etc., to a gauge block stack.

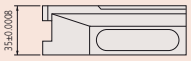

Holder base 35 mm : 619009
Acts as base for a stack of gauge blocks that carry one of the many types of point.

Half round jaw : 619010 to 619014
Used for gauging an outside or inside diameter if used when a pair of jaws in a holder.

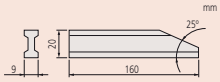

Plain jaw : 619018

Gauges outside and inside dimensions (not inside diameters) when used as a pair of jaws in a holder.

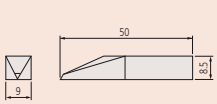

Scriber point : 619019
Scribes a straight line on a workpiece a known distance from a datum plane if used in a holder and holder base.

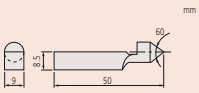

Centre point : 619020
Pushed into a small hole, or conical punch mark, this point provides the pivot for scribing a circular line with a gauge block trammel assembly.

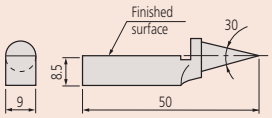

Tram point : 619021
For checking distances between lines and points.

Triangular straight edge : 619022/619023
Can be used to indicate parallelism.

All products to be sold to commercial customers. Product illustrations are without obligation. Product descriptions, in particular any and all technical specifications, are only binding when explicitly agreed upon. For suggested retail prices, please refer to the separate price list.

Mitutoyo

Ceraston

Accessory for Gauge Block Maintenance

This accessory for gauge block maintenance offers you the following benefits:
- Alumina-ceramic abrasive stone lets you remove burrs from hard materials such as ceramics, that ordinary stones cannot handle.
- You can use them for both steel gauge blocks and CERA Blocks.

601644 601645

No.	Dimensions (WxDxH)	Mass [g]
601645	100 x 25 x 12 mm	110
601644	150 x 50 x 20 mm	530

Removing burrs

1 Wipe any dust and oil films from the gauge block and the Ceraston (or Arkansas stone) using a solvent.
2 Place the gauge block on the Ceraston so that the measuring face that has burrs is on the abrasive surface of the stone. While applying light pressure, move the gauge block to and fro about ten times (Fig. 1). Use a block rubber for thin gauge blocks to apply even pressure (Fig. 2).
3 Check the measuring face for burrs with an optical flat. If the burrs have not been removed, repeat step 2. If burrs are too large, they may not be removed with an abrasive stone. If so, discard the gauge block.

Note: The abrasive surface of a Ceraston must be made flat by lapping it from time to time. After lapping the ceraston, the lapping powder must be completely removed from the surface of the stone to prevent the gauge block from being scratched. Mitutoyo does not offer Arkansas stones.

Maintenance Kit for Gauge Blocks

Series 516

This is a maintenance kit for gauge blocks that offers you the following benefits:
- It includes all maintenance tools needed for the daily care and storage of gauge blocks.
- It is supplied in a fitted wooden case for portable use.

No.	Tools and accessories included
516-650E	Ceraston (**601645**): Used for removing burrs on the measuring surface. Tweezers (**600004**): Used for handling thin gauge blocks. Blower brush (**600005**): Used for blowing dust off the measuring surface. Cleaning paper (**600006**): Used for wiping off rust preventive oil and contamination. Artificial leather mat (**600007**): Used as a gauge block mat. Reagent bottle (**600008**): Bottle for wiping solution (100 ml). Solution not included. Gloves (**600009D**)

Optional accessories

No.	Description
600001D	Anti Corrosion Oil for Gauge Blocks, 500 ml

Consumable spares

No.	Description
601645	Cerastone for Gauge Blocks, 100x25x12mm
600004	Tweezer for Gauge Blocks
600005	Blower Brush for Gauge Blocks
600006	Cleaning Paper for Gauge Blocks
600007	Artificial Leather Mat for Gauge Blocks
600008	Reagent Bottle, 100 ml
600009D	Cotton Gloves, White

All products to be sold to commercial customers. Product illustrations are without obligation. Product descriptions, in particular any and all technical specifications, are only binding when explicitly agreed upon. For suggested retail prices, please refer to the separate price list.

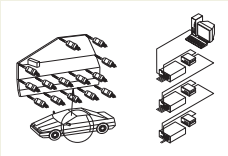

Linear Gauge Application Examples
Page 360

SENSORPAK
Page 361

Digimatic and Incremental Linear Gauge
Page 362

Counters and Display Units
Page 373

Mu-Checker
Page 378

Motorized Low Force High Precision Gauges LITEMATIC
Page 380

All products to be sold to commercial customers. Product illustrations are without obligation. Product descriptions, in particular any and all technical specifications, are only binding when explicitly agreed upon. For suggested retail prices, please refer to the separate price list.

Linear Gauge Application Examples

Linear Gage Applications

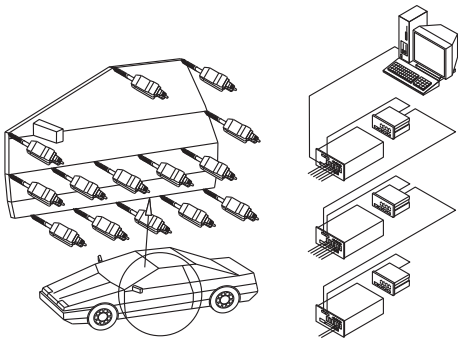

Multi-point measurement on car doors

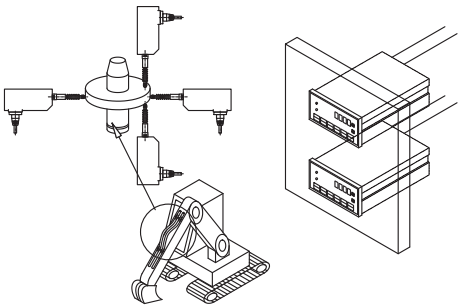

Dimensional measurement of fluid flywheels

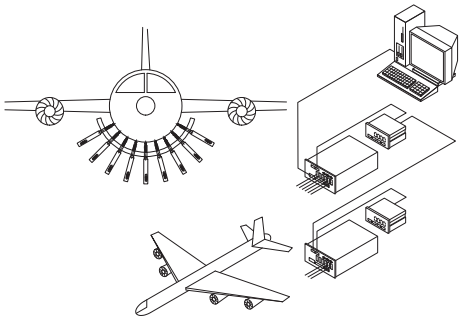

Measurement of aeroplane body deformation

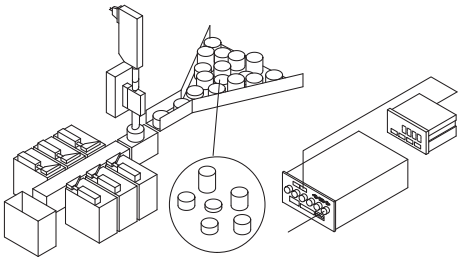

Sorting of parts according to size

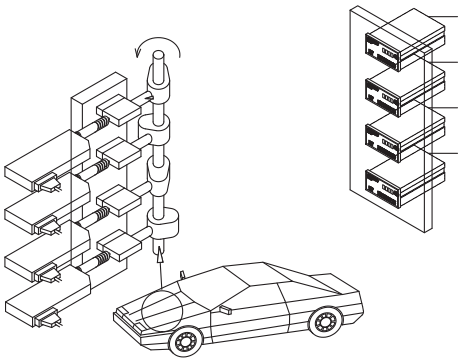

Cam measurement

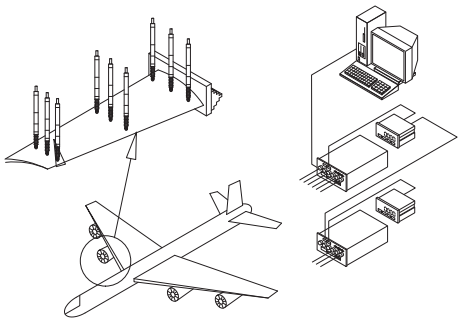

Multi-point measurement on turbine blades

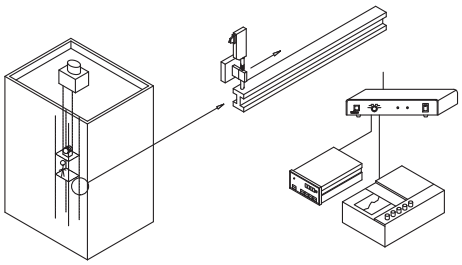

Measurement of deflection of lift guiding rails

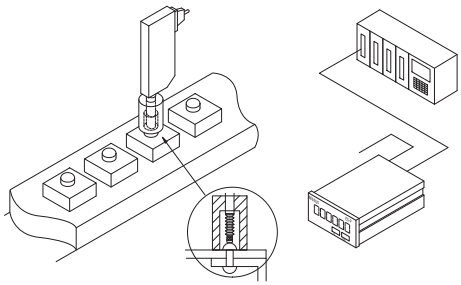

Rivet head testing

All products to be sold to commercial customers. Product illustrations are without obligation. Product descriptions, in particular any and all technical specifications, are only binding when explicitly agreed upon. For suggested retail prices, please refer to the separate price list.

SENSORPAK

Specifications

OS compatibility	Windows® 7 (32/64 bit) Windows® 8. 1 (32/64 bit) Excel® 2007, 2010, 2013
Delivered	License Key, Software CD

Optional accessories

No.	Description
12AAA807D	Cable RS-232C 2m

The SENSORPAK supports the development of measuring facilities and measuring stations. It offers you the following benefits:

- It can simultaneously display measurement values from up to 60 sensors in real time.
- You can make calculations using measurement values from up to 30 sensors in real time.
- It enables a huge range of different graphical presentations of using measurement, such as number representation, pointer representation, scale representation.
- Data registration can be made in control cards or data tables.
- You can also carry out further data processing with external software, such as Microsoft® Excel® or MeasurLink.

Measurement screen

Meter screen

Model	SENSORPAK
No.	**02NGB072**
Output function	Direct output to Microsoft® Excel® spreadsheet, CSV file output (compatible with MeasurLink)
Total tolerance judgement	GO/NG judgement (by specifying gauges to be used for total tolerance judgement) GO/NG signal output with optional I/O cable
Input function	Trigger function : by means of keys timer or external TRG (with optional I/O cable) Data input frequency : Max. 9999 times (with 60 gages connected) to 60000 times (with 6 gages connected)
Applicable counter	Counters with RS-232C interface (EH and EV), with USB interface (EH)
Display	Display type : Counter, bar graph, meter, chart (capable of simultaneous display) Tolerance judgement result : Color display (green/red) Connectable gauges : Max. 60 gages

All products to be sold to commercial customers. Product illustrations are without obligation. Product descriptions, in particular any and all technical specifications, are only binding when explicitly agreed upon. For suggested retail prices, please refer to the separate price list.

Mitutoyo

ABSOLUTE Digimatic Linear Gauge LGS Series

Series 575

The LGS is a compact ABS linear gauge that offers you the following benefits:
- Its ABSOLUTE Digimatic data output and IP-66 protection class give you best-of-breed technology.

575-303

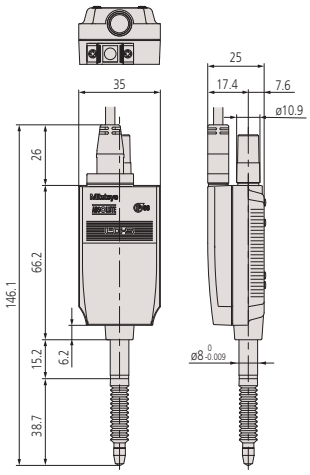

Metric

No.	Range [mm]	Measuring force *1	Stem Ø	Accuracy	Direction of counting	Mass [g]
575-303	0-12,7	2 N/1,8 N/1,6 N	8 mm	15 µm	positive	190

*1 Spindle DOWN/Horizontal/UP

Also available! Inch Models

Specifications

Digital step	0,01 mm
Scale	Electrostatic capacitance-type ABSOLUTE linear encoder
Max. response speed	Unlimited (measuring by scanning cannot be performed)
Contact point	Ø3 mm carbide ball thread : M 2,5 x 0,45 mm
Cable length	2 m
Output signal	Digimatic
Environmental conditions	0 °C to 40 °C (20 % to 80 % rel. humidity, no condensation)
Bearing type	Slide bearing

Optional accessories

No.	Description
02ADF640	Extension Adaptor, for SPC Cables.
936937	Digimatic Cable, Flat 10-Pin Type, 1 m
965014	Digimatic Cable, Flat 10-Pin Type, 2 m
903594	Air Driving Device , for Indicator
542-007D	Display Unit EC-Counter, CEE, for Digimatic Gauges
542-016	Linear Gauge Counter EG, for Linear Gauge LGS, LGD, Scale Units
542-093-2	Linear Gauge Counter EB, for LGS, LGD, Scale Units
542-072D	Linear Gauge Counter EH, for LGS, LGD, Scale Units
542-064	Linear Gauge Counter EV-D, for LGS, LGD, Scale Units
63AAA033	Digimatic I/F 8-Channel
63AAA026	Digimatic I/F 16-Channel
63AAA106	DMX-16 Channel

Consumable spares

No.	Description
238774	Silicon rubber boot for ID-C, ID-N, ID-S

Air Drive Unit

- Provides smooth lifting and lowering of the contact point of a gauge by pneumatic cylinder.
- The speed of lift can be regulated by the throttle on the remote cylinder.

No.	Range [mm]	Remarks	Suitable for gage model	Air supply [MPa]	Mass [g]
903594	10	Need air filter, regulator and lubricator	LGS	0,5	60

Specifications

Throttle	Interior Ø 2,5 mm Exterior Ø 3,2 mm

Optional accessories

No.	Description
903594	Air Driving Device , for Indicator

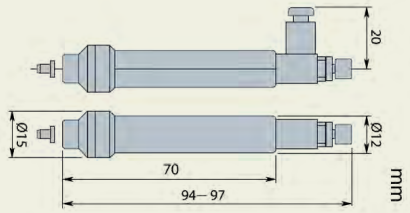

903594

Refer to the Linear Gauge documentation for more details

All products to be sold to commercial customers. Product illustrations are without obligation. Product descriptions, in particular any and all technical specifications, are only binding when explicitly agreed upon. For suggested retail prices, please refer to the separate price list.

ABSOLUTE Digimatic Linear Gauge LGD Series

Series 575

ABSOLUTE IP66

- Suitable for installation in machines, measuring devices and multi-position measurements.
- You can output data in Digimatic format, so you can document and determine measurement values via connected Digimatic data processing units and interface.

575-326

Specifications

Digital step	0,01 mm
Scale	Electrostatic capacitance-type ABSOLUTE linear encoder
Max. response speed	Unlimited (measurement by scanning cannot be performed)
Contact point	Ø3 mm carbide ball, thread: M 2,5 x 0,45
Output signal	Digimatic
Environmental conditions	0 °C to 40 °C (20 % to 80 % rel. humidity, no condensation)
External input	Origin-setting signal
Bearing type	Linear ball bearing

Standard accessories

No.	Description
538610	Wrench Key/542
04GAA857	Spanner/368

Optional accessories

No.	Description
02ADF640	Extension Adaptor, for SPC Cables.
936937	Digimatic Cable, Flat 10-Pin Type, 1 m
965014	Digimatic Cable, Flat 10-Pin Type, 2 m
02ADB680	Thrust Stem (LGF 10mm)
02ADN370	THRUST STEM SET
02ADE230	Air Drive Unit for Linear Gauges, 10 mm
02ADE250	Air Drive Unit for Linear Gauges, 25 mm
02ADE270	Air Drive Unit for Linear Gauges, 50 mm
542-007D	Display Unit EC-Counter, CEE, for Digimatic Gauges
542-016	Linear Gauge Counter EG, for Linear Gauge LGS, LGD, Scale Units
542-093-2	Linear Gauge Counter EB, for LGS, LGD, Scale Units
542-072D	Linear Gauge Counter EH, for LGS, LGD, Scale Units
542-064	Linear Gauge Counter EV-D, for LGS, LGD, Scale Units
63AAA033	Digimatic I/F 8-Channel
63AAA026	Digimatic I/F 16-Channel
63AAA106	DMX-16 Channel

Consumable spares

No.	Description
901312	Contact Element Ball Point, 7,3mm Length, Carbide, Metric
238772	Rubber Cap, 542-222/601/604,575-324
962504	Stem Guard 25mm/542
962505	Rubber Cap Assy/542, 50mm type for LGE-1050L

02ADF640

Refer to the Linear Gauge documentation for more details

Metric

No.	Range [mm]	Measuring force *1	Stem Ø	Accuracy	Cable length [m]	Mass [g]
575-326	0-10	1,2 N/1,1 N/1 N	8 mm	20 µm	2	260
575-326-3	0-10	1,2 N/1,1 N/1 N	8 mm	20 µm	3	310
575-326-5	0-10	1,2 N/1,1 N/1 N	8 mm	20 µm	5	360
575-326-7	0-10	1,2 N/1,1 N/1 N	8 mm	20 µm	7	410
575-327	0-25	4,6 N/4,3 N/4 N	15 mm	20 µm	2	300
575-327-3	0-25	4,6 N/4,3 N/4 N	15 mm	20 µm	3	350
575-327-5	0-25	4,6 N/4,3 N/4 N	15 mm	20 µm	5	400
575-327-7	0-25	4,6 N/4,3 N/4 N	15 mm	20 µm	7	450
575-328	0-50	5,7 N/5,3 N/4,9 N	15 mm	30 µm	2	400
575-328-3	0-50	5,7 N/5,3 N/4,9 N	15 mm	30 µm	3	450
575-328-5	0-50	5,7 N/5,3 N/4,9 N	15 mm	30 µm	5	500
575-328-7	0-50	5,7 N/5,3 N/4,9 N	15 mm	30 µm	7	550

*1 Spindle DOWN/Horizontal/UP

Also available! Inch Models

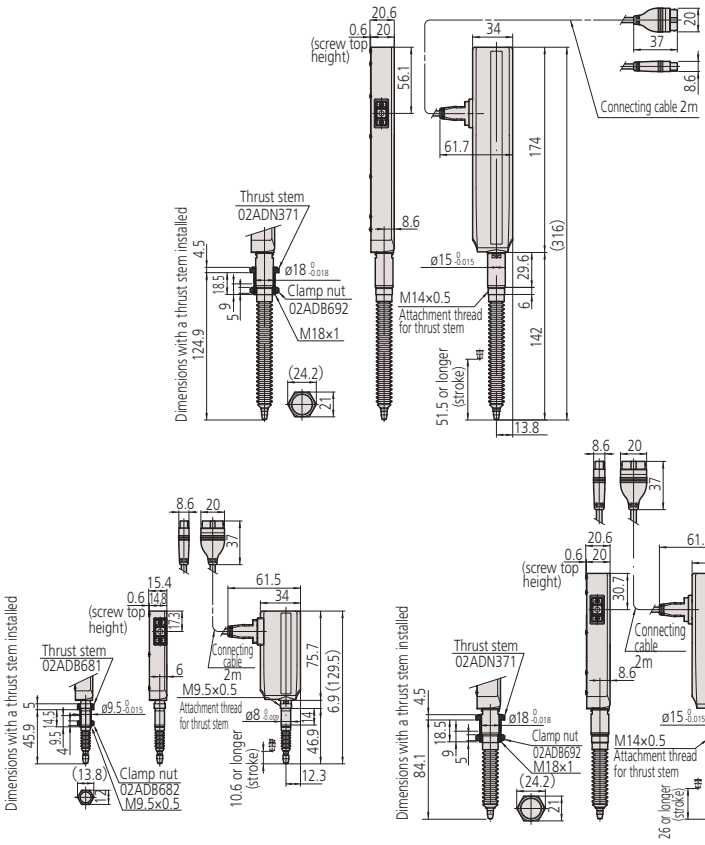

All products to be sold to commercial customers. Product illustrations are without obligation. Product descriptions, in particular any and all technical specifications, are only binding when explicitly agreed upon. For suggested retail prices, please refer to the separate price list.

Mitutoyo

Standard Linear Gauge LGF Series

Series 542

This is very robust and economical linear gauge that offers you the following benefits:

- The advanced construction of the plunger guidance assembly makes it very resistant to external shocks and vibration.
- Its differential square-wave signal output allows you to use it for a wide range of applications.
- It is very long lasting due to linear ball-bearings in the spindle unit.

542-161

No.	Range [mm]	Measuring force *1	Resolution [mm]	Stem Ø	Max. response speed	Accuracy	Signal pitch [µm]	Mass [g]
542-612	0-25	4,6/4,3/4 N	0,005	15 mm	1500 mm/s	(7,5 + L/50) µm/s	20	300
542-613	0-50	5,7/5,3/4,9 N	0,005	15 mm	1500 mm/s	(7,5 + L/50) µm/s	20	400
542-161	0-10	1,2/1,1/1 N	0,001	8 mm	1500 mm/s	(1,5 + L/50) µm/s	4	260
542-162	0-25	4,6/4,3/4 N	0,001	15 mm	1500 mm/s	(1,5 + L/50) µm/s	4	300
542-163	0-50	5,7/5,3/4,9 N	0,001	15 mm	1500 mm/s	(1,5 + L/50) µm/s	4	400
542-171	0-10	1,2/1,1/1 N	0,0005	8 mm	1500 mm/s	(1,5 + L/50) µm/s	2	260
542-172	0-25	4,6/4,3/4 N	0,0005	15 mm	1500 mm/s	(1,5 + L/50) µm/s	2	300
542-173	0-50	5,7/5,3/4,9 N	0,0005	15 mm	1500 mm/s	(1,5 + L/50) µm/s	2	400
542-181	0-10	1,2/1,1/1 N	0,0001	8 mm	400 mm/s	(0,8 + L/50) µm/s	0,4	310
542-182	0-25	4,6/4,3/4 N	0,0001	15 mm	400 mm/s	(0,8 + L/50) µm/s	0,4	350

*1 Spindle DOWN/Horizontal/UP

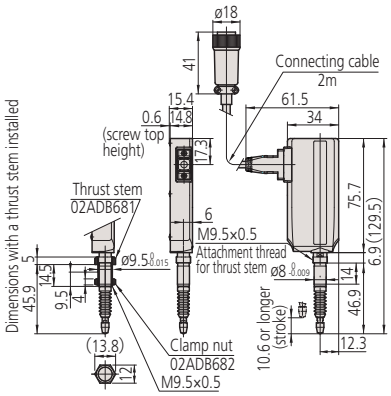

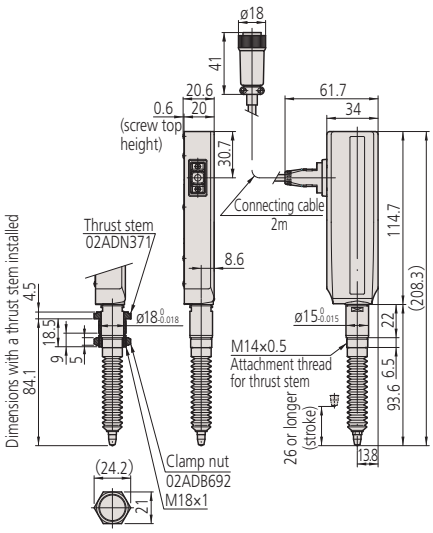

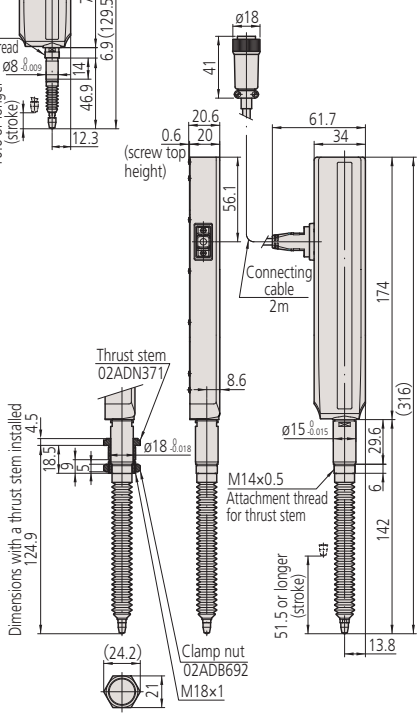

Specifications

Scale	Photoelectric linear encoder
Contact point	Ø3 mm carbide ball, thread: M 2,5 x 0,45
Cable length	2 m
Power supply	5 V (4,8 V to 5,2 V), 120 mA max.
Output signal	90° phase difference, differential square wave (RS-422A equivalent), minimum edge distance 1000 ns (5 µm type), 500 ns (1 µm type), 250 ns (0,5 µm type), 200 ns (0,1 µm type)
Environmental conditions	0 °C to 40 °C (20 % to 80 % rel. humidity, no condensation)
Bearing type	Linear ball bearing

Standard accessories

No.	Description
538610	Wrench Key/542

Optional accessories

No.	Description
902432	Extension Cable 20m
902433	Extension Cable 10m
902434	Extension Cable 5 m, for Linear Gauge
02ADB680	Thrust Stem (LGF 10mm)
02ADN370	THRUST STEM SET
02ADE230	Air Drive Unit for Linear Gauges, 10 mm
02ADE250	Air Drive Unit for Linear Gauges, 25 mm
02ADE270	Air Drive Unit for Linear Gauges, 50 mm
542-015	Linear Gauge Counter EG, for Linear Gauge LGF, LGK, LGB,LGM, LGH
542-092-2	Linear Gauge Counter EB, for LGF, LGK, LGB, LG, LGM, LGH
542-075D	Linear Gauge Counter EH, for LGF, LGK, LGB, LG, LGM, LGH
542-071D	Linear Gauge Counter EH, for LGF, LGK, LGB, LG, LGM, LGH
542-063	Linear Gauge Counter EV, for LGF, LGK, LGB, LG, LGM, LGH

Consumable spares

No.	Description
901312	Contact Element Ball Point, 7,3mm Length, Carbide, Metric
238772	Rubber Cap, 542-222/601/604,575-324
962504	Stem Guard 25mm/542
962505	Rubber Cap Assy/542, 50mm type for LGE-1050L

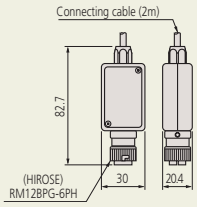

542-181
542-182

All products to be sold to commercial customers. Product illustrations are without obligation. Product descriptions, in particular any and all technical specifications, are only binding when explicitly agreed upon. For suggested retail prices, please refer to the separate price list.

Linear Gauge with Reference Point LGF-Z Series

Series 542

This is a very robust and economical linear gauge with a reference Point that offers you the following benefits:

- The advanced construction of the plunger guidance assembly makes it very resistant to external shocks and vibration.
- Its differential square-wave signal output allows you to use it for a wide range of applications.
- It is very long lasting due to linear ball-bearings in the spindle unit.
- The origin point mark on its scale gives you a reference point.

Specifications

Scale	Photoelectric linear encoder
Max. response speed	1500 mm/s
Contact point	Ø3 mm carbide ball, thread: M 2,5 x 0,45
Cable length	2 m
Power supply	5 V (4,8 V to 5,2 V), 120 mA max.
Output signal	90° phase difference, differential square wave (RS-422A equivalent), minimum edge distance 200 ns (1 µm type), 250 ns (0,5 µm type)
Environmental conditions	0 °C to 40 °C (20 % to 80 % rel. humidity, no condensation)
Bearing type	Linear ball bearing
Scale reference point	3 mm from lowest rest point (10 mm type) 5 mm from lowest rest point (25,5 mm type)

Standard accessories

No.	Description
538610	Wrench Key/542

Optional accessories

No.	Description
02ADF260	Extension Cable 5m with Origin
02ADF280	Extension Cable 10m with Origin
02ADF300	Extension Cable 20m with Origin
02ADB680	Thrust Stem (LGF 10mm)
02ADN370	THRUST STEM SET
02ADE230	Air Drive Unit for Linear Gauges, 10 mm
02ADE250	Air Drive Unit for Linear Gauges, 25 mm
02ADE270	Air Drive Unit for Linear Gauges, 50 mm
542-017	Linear Gauge Counter EG, for Linear Gauge LGF-Z
542-094-2	Linear Gauge Counter EB, for LGF-Z
542-073D	Linear Gauge Counter EH, for LGF-Z
542-067	Linear Gauge Counter EV, for LGF-Z

Consumable spares

No.	Description
901312	Contact Element Ball Point, 7,3mm Length, Carbide, Metric
238772	Rubber Cap, 542-222/601/604,575-324
962504	Stem Guard 25mm/542
962505	Rubber Cap Assy/542, 50mm type for LGE-1050L

Refer to the Linear Gauge documentation for more details

542-164

No.	Range [mm]	Measuring force *1	Resolution [mm]	Stem Ø	Accuracy	Signal pitch [µm]	Mass [g]
542-174	0-10	1,2 N/1,1 N/1 N	0,0005	8 mm	(1,5 + L/50)µm	2	260
542-164	0-10	1,2 N/1,1 N/1 N	0,001	8 mm	(1,5 + L/50) µm	4	260
542-175	0-25	4,6 N/4,3 N/4 N	0,0005	15 mm	(1,5 + L/50) µm	2	300
542-165	0-25	4,6 N/4,3 N/4 N	0,001	15 mm	(1,5 + L/50) µm	4	300
542-176	0-50	5,7 N/5,3 N/4,9 N	0,0005	15 mm	(1,5 + L/50) µm	2	400
542-166	0-50	5,7 N/5,3 N/4,9 N	0,001	15 mm	(1,5 + L/50) µm	4	400

*1 Spindle DOWN/Horizontal/UP

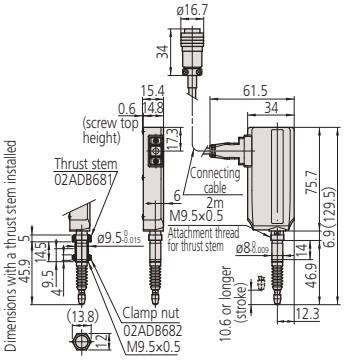

542-174, 542-164

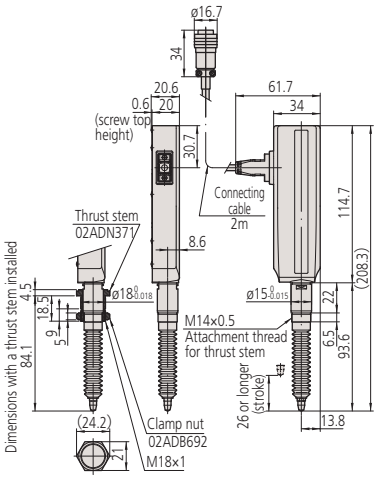

542-175, 542-165

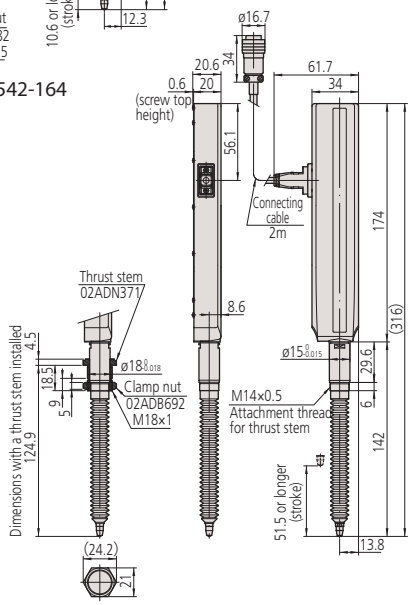

542-176, 542-166

All products to be sold to commercial customers. Product illustrations are without obligation. Product descriptions, in particular any and all technical specifications, are only binding when explicitly agreed upon. For suggested retail prices, please refer to the separate price list.

Slim Head Linear Gauge LGK Series

Series 542

This is a slim type linear gauge that allows you to meet a variety of measurement needs.
The Linear Gage SLIM HEAD LGK offers you the following benefits:

- Differential square-wave signal output enables to use it for a wide range of applications.
- You can install it even where space is restricted, thanks to its small size.
- Its photoelectric scale gives it high precision across the entire measuring range.
- It is very long lasting due to linear ball-bearings in the spindle unit.

542-156
542-157
542-158

No.	Range [mm]	Measuring force *1	Resolution [mm]	Accuracy	Signal pitch [µm]	Max. response speed	Mass [g]
542-156	0-10	0,8 N/0,75 N/0,7 N	0,001	(1,5 + L/50) µm	4	1500	175
542-157	0-10	0,8 N/0,75 N/0,7 N	0,0005	(1,5 + L/50) µm	2	1500	175
542-158	0-10	0,8 N/0,75 N/0,7 N	0,0001	(0,8 + L/50) µm	0,4	400	175

*1 Spindle DOWN/Horizontal/UP

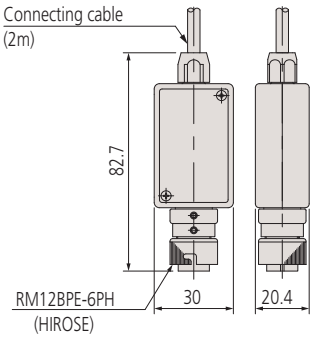

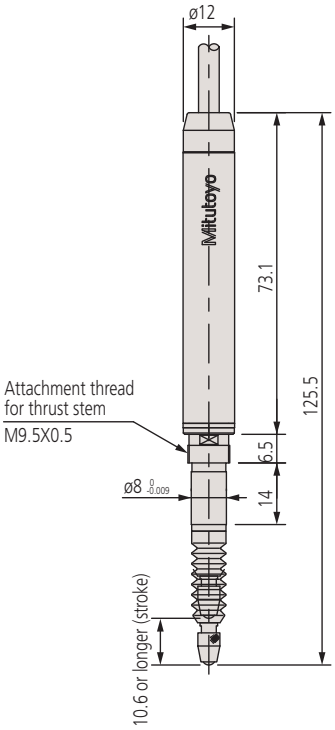

Specifications

Scale	Photoelectric linear encoder
Stem Ø	8 mm
Contact point	Ø 3 mm carbide ball, thread: M 2,5 x 0,45
Cable length	2 m
Power supply	5 V (4,5 V to 5,2 V), 80 mA max.
Output signal	90° phase difference, differential square wave (RS-422A equivalent) minimum edge distance 200 ns (0,1 µm type), 200 ns (0,5 µm type), 400 ns (1 µm type)
Environmental conditions	0° C to 40° C (20% to 80% rel. humidity, no condensation)
Bearing type	Linear ball bearing

Standard accessories

No.	Description
538610	Wrench Key/542

Optional accessories

No.	Description
902434	Extension Cable 5 m, for Linear Gauge
902433	Extension Cable 10m
902432	Extension Cable 20m
02ADE230	Air Drive Unit for Linear Gauges, 10 mm
02ADB680	Thrust Stem (LGF 10mm)
542-015	Linear Gauge Counter EG, for Linear Gauge LGF, LGK, LGB,LGM, LGH
542-092-2	Linear Gauge Counter EB, for LGF, LGK, LGB, LG, LGM, LGH
542-075D	Linear Gauge Counter EH, for LGF, LGK, LGB, LG, LGM, LGH
542-071D	Linear Gauge Counter EH, for LGF, LGK, LGB, LG, LGM, LGH
542-063	Linear Gauge Counter EV, for LGF, LGK, LGB, LG, LGM, LGH

Consumable spares

No.	Description
901312	Contact Element Ball Point, 7,3mm Length, Carbide, Metric
238772	Rubber Cap, 542-222/601/604,575-324

Refer to the Linear Gauge documentation for more details

All products to be sold to commercial customers. Product illustrations are without obligation. Product descriptions, in particular any and all technical specifications, are only binding when explicitly agreed upon. For suggested retail prices, please refer to the separate price list.

Slim Head Linear Gauge LGB Series

Series 542

IP54

This is an extra slim linear gauge that offers you the following benefits:
- Its differential square-wave signal output allows you to use it for a wide range of applications.
- It is very long lasting due to linear ball-bearings in the spindle unit.

542-204
542-204H

542-222
542-222H
542-224

542-230

542-244

542-262
542-262H
542-264

542-270

No.	Range [mm]	Measuring force *1	Remarks	Stem Ø	Accuracy	Mass [g]
542-244	0-5	0,65 N/0,6 N/0,55 N	-	9,5 mm	2 µm	160
542-204	0-5	0,65 N/0,6 N/0,55 N	-	8 mm	2 µm	145
542-204H	0-5	0,8 N/0,75 N/0,7 N	-	8 mm	1 µm	145
542-222	0-10	0,8 N/0,75 N/0,7 N	-	8 mm	2 µm	150
542-222H	0-10	0,8 N/0,75 N/0,7 N	-	8 mm	1 µm	150
542-224	0-10	0,6 N/0,55 N/0,5 N	Low measuring force	8 mm	2 µm	165
542-230	0-10	0,8 N/0,75 N/0,7 N	w/pneumatic cylinder, 0,3 to 0,4 MPa	8 mm	2 µm	165
542-223	0-10	0,8 N/0,75 N/0,7 N	w/pneumatic cylinder, 0,3 to 0,4 MPa	8 mm	2 µm	165
542-262	0-10	0,8 N/0,75 N/0,7 N	-	9,5 mm	2 µm	170
542-262H	0-10	0,8 N/0,75 N/0,7 N	-	9,5 mm	1 µm	170
542-264	0-10	0,6 N/0,55 N/0,5 N	Low measuring force	9,5 mm	2 µm	170
542-270	0-10	0,8 N/0,75 N/0,7 N	w/pneumatic cylinder, 0,3 to 0,4 MPa	9,5 mm	2 µm	170

*1 Spindle DOWN/Horizontal/UP

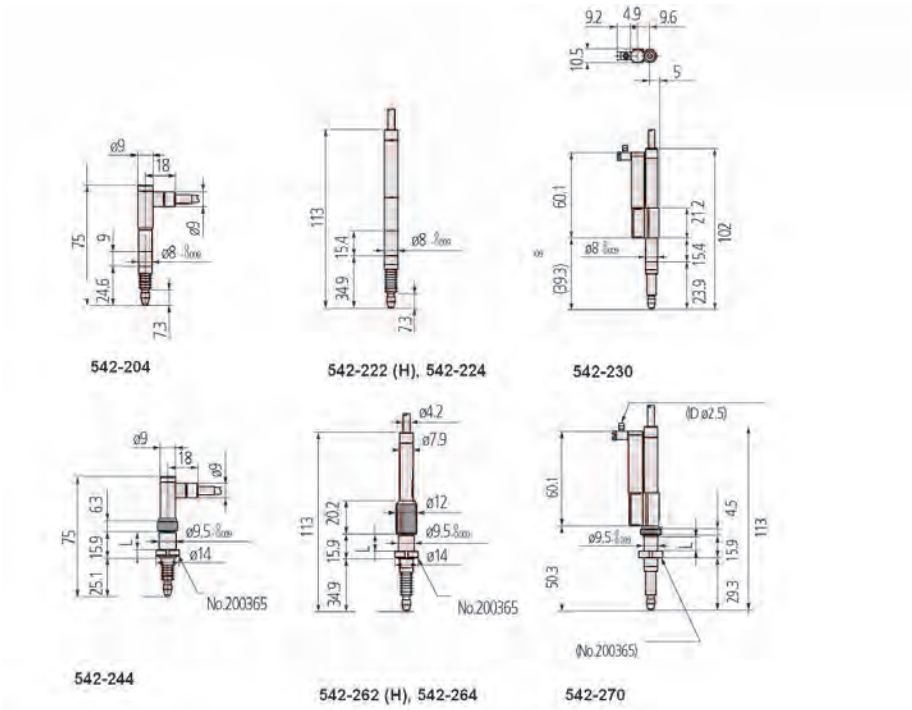

Specifications

Scale	Photoelectric linear encoder
Max. response speed	900 mm/s
Contact point	Ø3 mm carbide ball, thread: M 2,5 x 0,45
Resolution	0,001 mm
Signal pitch	4 µm
Cable length	2 m
Power supply	5 V (4,5 V to 5,2 V), 80 mA max.
Output signal	90° phase difference, differential square wave (RS-422A equivalent)
Environmental conditions	0°C to 40°C (20% to 80% rel. humidity, no condensation)
Bearing type	Linear ball bearing

Standard accessories

No.	Description
538610	Wrench Key/542

Optional accessories

No.	Description
902434	Extension Cable 5 m, for Linear Gauge
902433	Extension Cable 10m
902432	Extension Cable 20m
02ADE230	Air Drive Unit for Linear Gauges, 10 mm
542-015	Linear Gauge Counter EG, for Linear Gauge LGF, LGK, LGB,LGM, LGH
542-092-2	Linear Gauge Counter EB, for LGF, LGK, LGB, LG, LGM, LGH
542-075D	Linear Gauge Counter EH, for LGF, LGK, LGB, LG, LGM, LGH
542-071D	Linear Gauge Counter EH, for LGF, LGK, LGB, LG, LGM, LGH
542-063	Linear Gauge Counter EV, for LGF, LGK, LGB, LG, LGM, LGH

Consumable spares

No.	Description
901312	Contact Element Ball Point, 7,3mm Length, Carbide, Metric
238773	Rubber Cap, 542-204/206/246
238772	Rubber Cap, 542-222/601/604,575-324

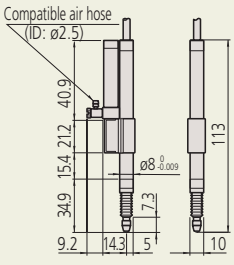

542-223

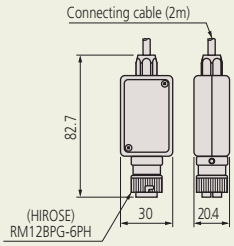

Connector for all Gauges

All products to be sold to commercial customers. Product illustrations are without obligation. Product descriptions, in particular any and all technical specifications, are only binding when explicitly agreed upon. For suggested retail prices, please refer to the separate price list.

Mitutoyo

High Resolution Linear Gauge LGB Series

Series 542

The Linear Gage LGB offers you the following benefits:
- It has an extra compact design, and its small photoelectric scale lets you measure at high precision across the entire range.
- Differential square-wave signal output allows you to use it for a wide range of applications.
- You can install it in machines and measuring devices.
- Very long life due to the linear ball-bearings in the spindle unit.

542-246

No.	Range [mm]	Measuring force *1	Stem Ø	Accuracy	Mass [g]
542-246	0-5	0,65 N/0,6 N/0,55 N	9,5 mm	0,8 µm	160

*1 Spindle DOWN/Horizontal/UP

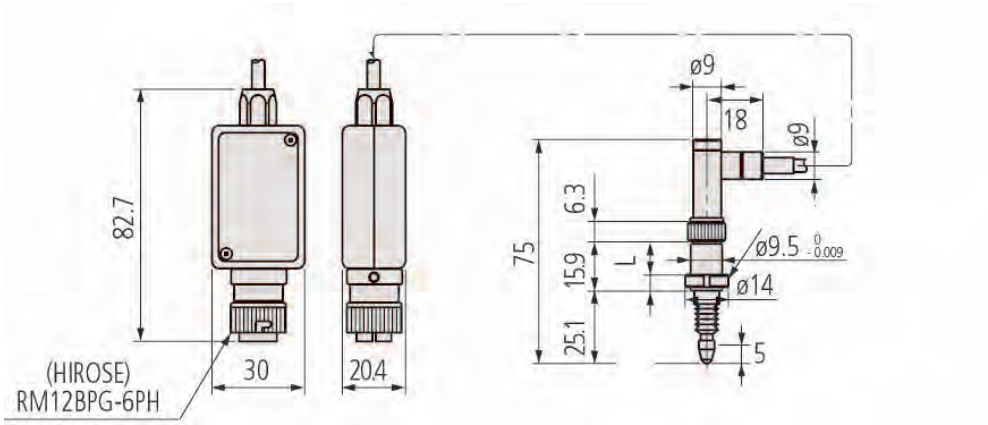

Specifications

Scale	Photoelectric linear encoder
Max. response speed	380 mm/s
Contact point	Ø3 mm carbide ball, thread: M 2,5 x 0,45
Resolution	0,1 µm
Cable length	2 m
Power supply	5 V (4,5 V to 5,2 V), 150 mA max.
Output signal	90° phase difference differential square wave (RS422 A equivalent)
Environmental conditions	0°C to 30°C (20% to 80% rel. humidity, no condensation)
Bearing type	Linear ball bearing

Standard accessories

No.	Description
538610	Wrench Key/542

Optional accessories

No.	Description
902434	Extension Cable 5 m, for Linear Gauge
902433	Extension Cable 10m
902432	Extension Cable 20m
542-015	Linear Gauge Counter EG, for Linear Gauge LGF, LGK, LGB,LGM, LGH
542-092-2	Linear Gauge Counter EB, for LGF, LGK, LGB, LG, LGM, LGH
542-075D	Linear Gauge Counter EH, for LGF, LGK, LGB, LG, LGM, LGH
542-071D	Linear Gauge Counter EH, for LGF, LGK, LGB, LG, LGM, LGH
542-063	Linear Gauge Counter EV, for LGF, LGK, LGB, LG, LGM, LGH

Consumable spares

No.	Description
901312	Contact Element Ball Point, 7,3mm Length, Carbide, Metric
238773	Rubber Cap, 542-204/206/246

Refer to the Linear Gauge documentation for more details

All products to be sold to commercial customers. Product illustrations are without obligation. Product descriptions, in particular any and all technical specifications, are only binding when explicitly agreed upon. For suggested retail prices, please refer to the separate price list.

Large Measuring Range Linear Gauge LG / LGM Series

Series 542

This linear gauge has a large measuring range 100 mm
– Your options include both manual and motorised versions.

IP54 IP66
rubber boot type

542-312

542-313D

Specifications

Scale	Photoelectric linear encoder
Contact point	Ø 3 mm carbide ball, thread: M 2,5 x 0,45
Dimensions (WxDxH)	90 x 175 x 74 mm (control unit)
Cable length	2 m
Power supply	5 V (4,8 V to 5,2 V) (Control unit No. 542-313D: 230 V 50/60 Hz)
Output signal	90° phase difference, differential square wave (RS-422A equivalent)
Environmental conditions	0°C to 40°C (20% to 80% rel. humidity, no condensation)
Bearing type	Linear ball bearing

Optional accessories

No.	Description
542-015	Linear Gauge Counter EG, for Linear Gauge LGF, LGK, LGB,LGM, LGH
542-092-2	Linear Gauge Counter EB, for LGF, LGK, LGB, LG, LGM, LGH
542-075D	Linear Gauge Counter EH, for LGF, LGK, LGB, LG, LGM, LGH
542-071D	Linear Gauge Counter EH, for LGF, LGK, LGB, LG, LGM, LGH
542-063	Linear Gauge Counter EV, for LGF, LGK, LGB, LG, LGM, LGH

Consumable spares

No.	Description
901312	Contact Element Ball Point, 7,3mm Length, Carbide, Metric
02ADA004	RUBBER CAP/LGM

Rubber boot for IP66 type only

No.	Range [mm]	Measuring force *1	Resolution [µm]	Remarks	Accuracy	Max. response speed	Mass [g]
542-312	0-100	8 N/6,5 N/5 N	0,1	Standard	(2 + L/100) µm ≤ 2,5 µm	400 mm/s	640
542-316	0-100	3 N/-/-	0,1	Low measuring force	(2 + L/100) µm ≤ 2,5 µm	400 mm/s	750
542-314	0-100	8 N/6,5 N/5 N	0,1	w/ rubber boot	(2 + L/100) µm ≤ 2,5 µm	400 mm/s	750
542-332	0-100	8 N/6,5 N/5 N	1	Standard	(2,5 + L/100) µm ≤ 3 µm	800 mm/s	750
542-336	0-100	3 N/-/-	1	Low measuring force	(2,5 + L/100) µm ≤ 3 µm	800 mm/s	750
542-334	0-100	8 N/ 6,5 N/5 N	1	w/ rubber boot	(2,5 + L/100) µm ≤ 3 µm	800 mm/s	750
542-313D	0-100	3 N/ 6,5 N/ 9,5 N	0,1	Motor-driven type	(2 + L/100) µm ≤ 2,5 µm	400 mm/s	1640
542-315D	0-100	4,5 N/-/6 N	0,1	Motor-driven type	(2 + L/100) µm ≤ 2,5 µm	400 mm/s	1640
542-333D	0-100	3 N/6,5 N/9,5 N	1	Motor-driven type	(2,5 + L/100) µm ≤ 3 µm	800 mm/s	940
542-335D	0-100	4,5 N/-/6 N	1	Motor-driven type	(2,5 + L/100) µm ≤ 3 µm	800 mm/s	1640

*1 Spindle DOWN/Horizontal/UP

Control unit for
542-313D, 542-315D, 542-333D,542-335D
(Standard accessory)

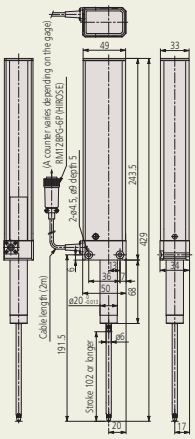

542-312, -316, -332, -336
Standard/Low measuring force model

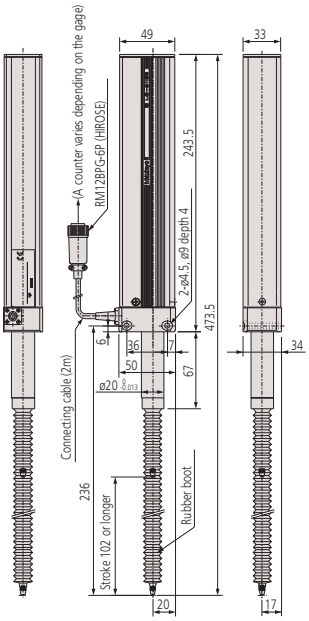

542-314, -334
Rubber boot model

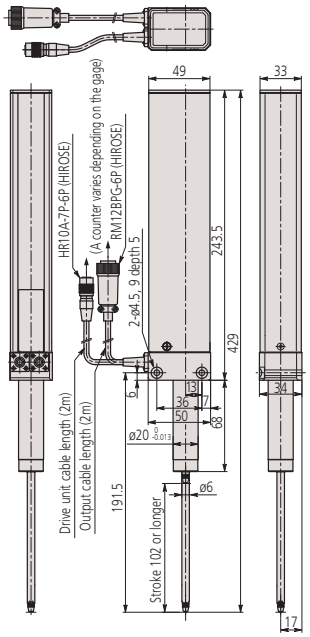

542-313, -333
Standard model
(motor-driven type)

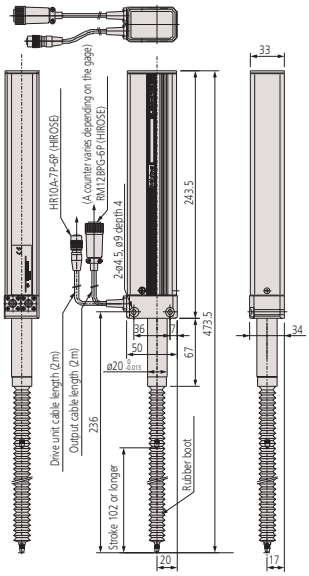

542-315, 335
Rubber boot model
(motor-driven type)

All products to be sold to commercial customers. Product illustrations are without obligation. Product descriptions, in particular any and all technical specifications, are only binding when explicitly agreed upon. For suggested retail prices, please refer to the separate price list.

Mitutoyo

Laser Hologage LGH

Series 542

This is a highly precise dial gauge that uses optical interference so you can measure with unparallelled accuracy.
The Mitutoyo Laser Hologage offers you the following benefits:

- Through optical interference of laser light through a diffraction grating it gives you an extremely precise holographic scale with 0,00001mm resolution
- You can use the Laser Hologage for extremely precise measurements, as well as a transducer in ultra-precise positioning and control systems.

542-715

No.	Range [mm]	Measuring force *1	Resolution [µm]	Stem Ø	Accuracy	Mass [g]
542-715	0-10	0,65 N/0,55 N/0,45 N	0,01	15 mm	0,2 µm	220
542-716	0-10	0,12 N/ - / -	0,01	15 mm	0,2 µm	220

*1 Spindle DOWN/Horizontal/UP

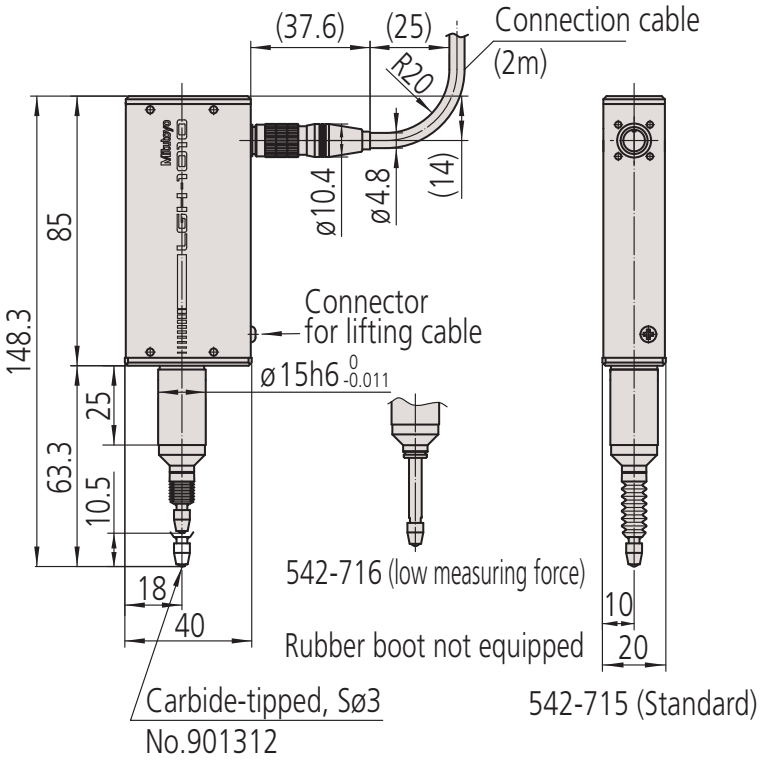

Specifications

Repeatability	0,1 µm
Retrace error	0,1 µm
Scale	Laser-hologram measurement sensor
Max. response speed	700 mm/s
Contact point	Ø 3 mm carbide ball, thread: M 2,5 x 0,45
Output signal	90° phase difference, differential square wave (RS-422A equivalent)
Signal pitch	4 µm
Bearing type	High precision linear ball bearing
Environmental conditions	0C to 40°C (20% to 80% rel. humidity, no condensation)
Delivered	With Display Unit

Standard accessories

No.	Description
538610	Wrench Key/542

Optional accessories

No.	Description
971750	Laser Hologauge stand
971753	Spindle lifting cable
971751	Gage Fixture (A) LHG
971752	Fastening system, Laser Hologage

Consumable spares

No.	Description
901312	Contact Element Ball Point, 7,3mm Length, Carbide, Metric

Refer to the Linear Gauge documentation for more details

All products to be sold to commercial customers. Product illustrations are without obligation. Product descriptions, in particular any and all technical specifications, are only binding when explicitly agreed upon. For suggested retail prices, please refer to the separate price list.

Laser Hologage LGH

Functions	Series 542
Digimatic data output	●
ON/OFF	●
ZERO SET	●
PRESET	●
Error display/output	●
Counting direction switchable	●
MAX/MIN difference measurement	●
mm / inch switching	●
RS-232C Output	●
USB Output for SENSORPAK	●
Analogue output	●
Extern tolerance set (when a PC is used)	●

Specifications

Repeatability	0,02 µm
Retrace error	0,05 µm
Scale	Laser-hologram measurement sensor
Max. response speed	250 mm/s
Contact point radius	R=5 mm carbide
Bearing type	High precision linear ball bearing
Environmental conditions	10°C to 30°C (30% to 70% rel. humidity, no condesation)

Standard accessories

No.	Description
538610	Wrench Key/542
542-074D	Linear Gauge Counter EH, for LGH

Optional accessories

No.	Description
971750	Laser Hologauge stand
971753	Spindle lifting cable
971751	Gage Fixture (A) LHG
971752	Fastening system, Laser Hologage

Consumable spares

No.	Description
901312	Contact Element Ball Point, 7,3mm Length, Carbide, Metric

Refer to the Linear Gauge documentation for more details

Series 542

This is a highly precise dial gauge that uses optical interference so you can measure with unparallelled accuracy.
The Mitutoyo Laser Hologage offers you the following benefits:

- Through optical interference of laser light through a diffraction grating it gives you an extremely precise holographic scale with 0,01 µm resolution.
- The measuring head is very compact, enabling you to build it into various systems far less expensively than conventional laser technology.
- You can use the Laser Hologage for measuring extremely precise parts, as well as a transducer in ultra-precise positioning and control systems.

542-925D

Laser Hologage supplied with Display Unit (2 axis counter)

No.	Range [mm]	Measuring force *1	Resolution [µm]	Remarks	Accuracy	Mass [g]
542-925D	0-10	0,55 N/0,45 N/0,35 N	0,01	Supplied with Display Unit 542-074D	0,1 µm	900
542-926D	0-10	0,1 N/-/-	0,01	Supplied with Display Unit 542-074D	0,1 µm	900

*1 Spindle DOWN/Horizontal/UP

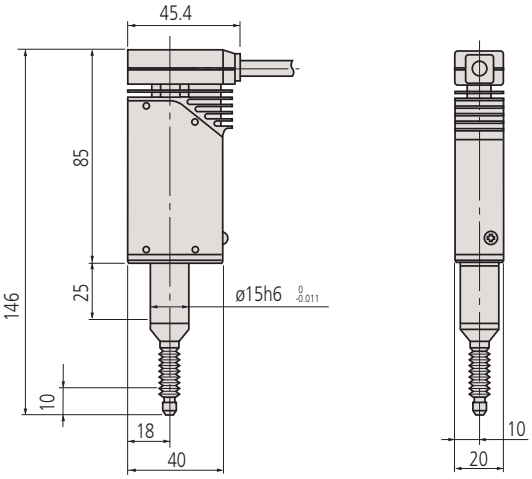

All products to be sold to commercial customers. Product illustrations are without obligation. Product descriptions, in particular any and all technical specifications, are only binding when explicitly agreed upon. For suggested retail prices, please refer to the separate price list.

Air Drive Unit for Linear Gauges

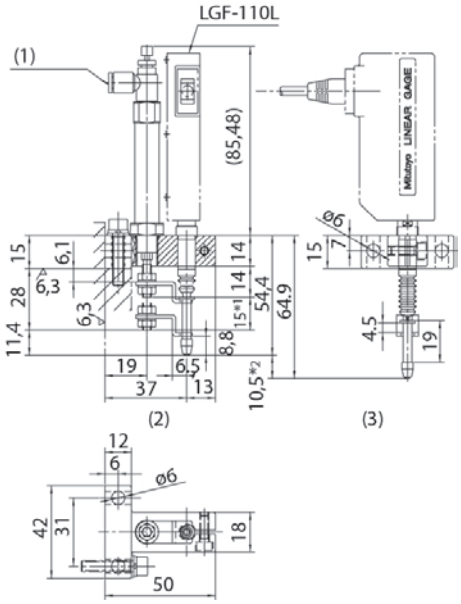

For Linear Gauge with 10 mm range

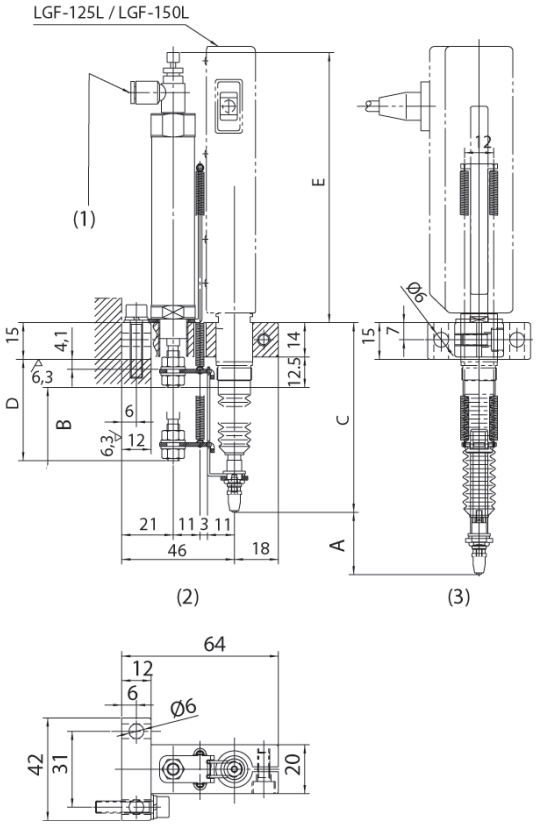

For Linear Gauge with 25 mm and 50 mm range
1. Speed controller
2. At air supply off
3. At air supply on

No.	Range [mm]	Remarks	Air supply [MPa]	A [mm]	B [mm]	C [mm]	D [mm]	E [mm]
02ADE230	0-10	Need air filter, regulator and lubricator	0,2 to 0,4					
02ADE250	0-25	Need air filter, regulator and lubricator	0,2 to 0,4	25,5	30	77,6	41,5	110,5
02ADE270	0-50	Need air filter, regulator and lubricator	0,2 to 0,4	51	50	95,9	66,5	159,5

Refer to the Linear Gauge documentation for more details

All products to be sold to commercial customers. Product illustrations are without obligation. Product descriptions, in particular any and all technical specifications, are only binding when explicitly agreed upon. For suggested retail prices, please refer to the separate price list.

EC Counter for Linear Gauges

Functions	Series 542
Digimatic data output	●
ON/OFF	●
External PRESET/ZERO	●
ZERO SET	●
PRESET	●
ABS/INC	●
Counting direction switchable	●
Error display/output	●
External HOLD	●
mm / inch switching	●

Specifications

Power supply	+ 9 - 12 V DC 400 mA or AC adapter
Display	Green LED display, 6 digits plus sign
Tolerance judgement display	LED display (3 steps: Amber, Green, Red)

Standard accessories

No.	Description
06AEG302D	AC-Adapter, 9V 500mA, CEE Type

Optional accessories

No.	Description
C162-155	I/O Cable for Linear Gauge Counter 2m
936937	Digimatic Cable, Flat 10-Pin Type, 1 m
965014	Digimatic Cable, Flat 10-Pin Type, 2 m
06ADV380D	USB Input Tool Direct (Digimatic USB) cable, Flat 10-Pin Type, 2 m
02AZD790D	U-WAVE T Connection Cable D, Flat 10-Pin Type

Refer to the Linear Gauge documentation for more details

Series 542

This Digimatic display can be connected to any device with Digimatic output, including micrometers, indicators, calipers and LGS/LGD Linear Gauge.
It offers you the following benefits:
– It has a data output and tolerance evaluation function.

542-007

No.	Resolution [mm]	Input signal type	Applicable gauge	Gauge inputs
542-007D	0,001/0,01 (automatic setting by gauge)	Digimatic code	Digimatic Indicator Digimatic Scale Units Linear Gauge LGS/LGD	1

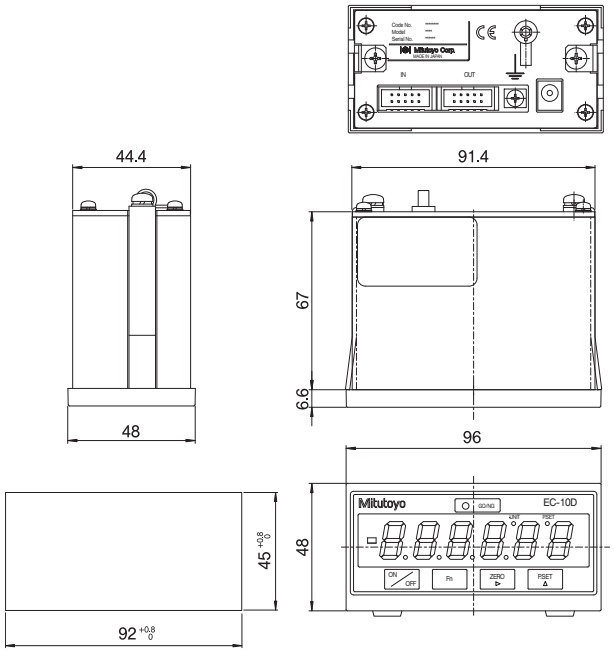

542-007

All products to be sold to commercial customers. Product illustrations are without obligation. Product descriptions, in particular any and all technical specifications, are only binding when explicitly agreed upon. For suggested retail prices, please refer to the separate price list.

EG Counter for Linear Gauges

Series 542

This is a compact counter with a control panel that offers you the following benefits:
– Its I/O control function enables tolerance judgement evaluation (3 or 5 steps) or parallel BCD output function.

542-015

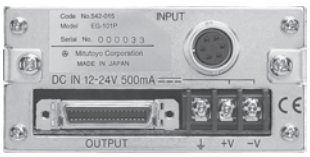

542-017

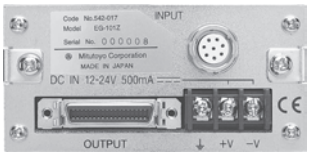

542-016

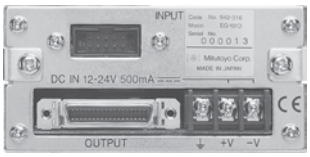

No.	Resolution [mm]	Max. input frequency	Input signal type	Applicable gauge	Gauge inputs	Mass [g]
542-015	0,0001/0,0005/ 0,001/0,005/0,01	1,25 MHz (2-phase square wave), response speed depends on gauge specification	Differential square-wave	LGF, LGK, LGB, LG, LGM, LGH (excluding LGF-Z with reference point, LGH with 0,01 µm resolution)	1	400
542-017	0,0001/0,0005/ 0,001/0,005/0,01	1,25 MHz (2-phase square wave), response speed depends on gauge specification	Differential square-wave with reference point	LGF-Z with reference point	1	400
542-016	0,001/0,01 (automatic setting by gauge)	-	Digimatic code	Digimatic Indicator Digimatic Scale Units Linear Gauge LGS/LGD	1	400

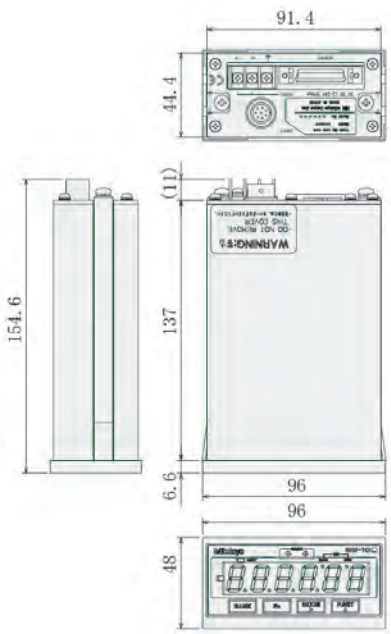

Functions	Series 542 542-015 542-017	Series 542 542-016
External PRESET/ZERO	●	●
ZERO SET	●	●
PRESET	●	●
Counting direction switchable	●	●
ABS/INC		●
BCD output	●	●
Error display/output	●	●
MAX / MIN / Difference measurement	●	●
mm / inch switching	●	●
External peak-hold cancel	●	●

Specifications

Power supply	Terminal block (M3 screws) 12 to 24 V DC, 6W or less (500 mA max.) external supply, AC-adapter is not standard accessory
Display	Green LED display 6 digits plus sign
Tolerance judgement display	LED display (3 steps : Amber, Green, Red/5 steps : Amber, Amber flashing, Green, Red flashing, Red)

Optional accessories

No.	Description
02ADB440	Data Plug I/O Interface, for Litematic
02ADN460	Adaptor 220V
02ZAA020	AC Cable
02ADD930	Connecting Cable, 3-Wires for AC Adapter
02ADF180	External Switch Box

02ADB440

02ADD930, 02ADN460, 02ZAA020

Refer to the Linear Gauge documentation for more details

All products to be sold to commercial customers. Product illustrations are without obligation. Product descriptions, in particular any and all technical specifications, are only binding when explicitly agreed upon. For suggested retail prices, please refer to the separate price list.

EB Counter for Linear Gauges

Series 542

– Its I/O control function enables tolerance judgement evaluation (3 or 5 steps) or serial BCD output function.
– Dynamic measurement possible with simplified analog output.

Functions	Series 542		
	542-092-2	542-094-2	542-093-2
Digimatic data output	●	●	●
External PRESET/ZERO	●	●	●
ZERO SET	●	●	●
PRESET	●	●	●
Counting direction switchable	●	●	●
ABS/INC			●
BCD output	●	●	●
Error display/output	●	●	●
External HOLD	●	●	●
MAX / MIN / Difference measurement	●	●	●
mm / inch switching	●	●	●
RS link		●	
Output I/O	●	●	●
Analogue output	●	●	●

542-092-2

542-094-2

542-093-2

Specifications

Power supply	Terminal block (M3 screws) 12 to 24 V DC, 6W or less (500 mA max.) external supply, AC-adapter is not standard accessory
Display	Green LED display, 6 digit plus sign
Tolerance judgement display	LED display (3 steps : Amber, Green, Red/5 steps : Amber, Amber flashing, Green, Red flashing, Red)

Optional accessories

No.	Description
02ADB440	Data Plug I/O Interface, for Litematic
02ADN460	Adaptor 220V
02ZAA020	AC Cable
02ADD930	Connecting Cable, 3-Wires for AC Adapter
02ADF180	External Switch Box
936937	Digimatic Cable, Flat 10-Pin Type, 1 m
965014	Digimatic Cable, Flat 10-Pin Type, 2 m
06ADV380D	USB Input Tool Direct (Digimatic USB) cable, Flat 10-Pin Type, 2 m
02AZD790D	U-WAVE T Connection Cable D, Flat 10-Pin Type

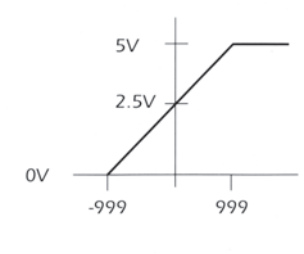

Specifications :
Output voltage: 2.5 V + counting value x voltage resolution (25mV/2.5 mV]
Full scale : 0 to 5 V
Response speed: 10 Hz (update time 5 MS)
Accuracy : ± 5 % (0 to 5 V) ± 0.5 % (2.5 V ± 200 mV, after Offset adjustment)
The accuracy is indicated with respect to full scale 5 V
Load resistance: 300 kΩ or more

No.	Resolution [mm]	Max. input frequency	Input signal type	Applicable gauge	Gauge inputs	Mass [g]
542-092-2	0,0001/0,0005/ 0,001/0,005/0,01	1,25 MHz (2-phase square wave), response speed depends on gauge specification	Differential square-wave	LGF, LGK, LGB, LG, LGM, LGH (excluding LGF-Z with reference point, LGH with 0,01 µm resolution)	1	400
542-094-2	0,0001/0,0005/ 0,001/0,005/0,01	1,25 MHz (2-phase square wave), response speed depends on gauge specification	Differential square-wave with reference point	LGF-Z with reference point	1	400
542-093-2	0,001/0,01 (automatic setting by gauge)	-	Digimatic code	Digimatic Indicator Digimatic Scale Units Linear Gauge LGS/LGD	1	400

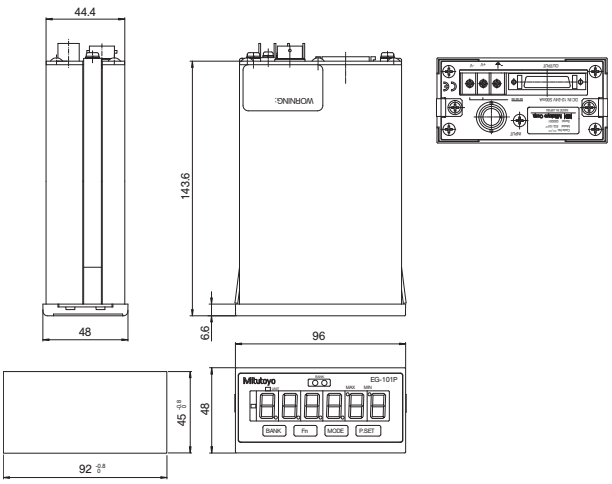

All products to be sold to commercial customers. Product illustrations are without obligation. Product descriptions, in particular any and all technical specifications, are only binding when explicitly agreed upon. For suggested retail prices, please refer to the separate price list.

EH Counter for Linear Gauges

Series 542

Multi-functional Counter
- The standard RS-232C and USB interfaces allows easy communication with an external PC (the USB can only be used with SENSORPAK).
- The built-in networking function allows you to easily create a multi-point measuring system (RS link, max. 10 Counter).
- The 2-gauge input type can calculate additions and subtractions between two gauges.

542-075D

542-071D, 542-073D, 542-072D

542-075D

542-071D

542-073D

542-072D

No.	Resolution [mm]	Max. input frequency	Input signal type	Applicable gauge	Gauge inputs	Mass [g]
542-075D	0,0001/0,001/0,01	2,5 MHz (2-phase square wave), response speed depends on gauge specification	Differential square-wave	LGF, LGK, LGB, LG, LGM, LGH (excluding LGF-Z with reference point, LGH with 0,01 µm resolution)	1	760
542-071D	0,0001/0,001/0,01	2,5 MHz (2-phase square wave), response speed depends on gauge specification	Differential square-wave	LGF, LGK, LGB, LG, LGM, LGH (excluding LGF-Z with reference point, LGH with 0,01 µm resolution)	2	800
542-073D	0,0001/0,001/0,01	2,5 MHz (2-phase square wave), response speed depends on gauge specification	Differential square-wave with reference point	LGF-Z with reference point	2	800
542-072D	0,001/0,01 (automatic setting by gauge)	-	Digimatic code	Digimatic Indicator Digimatic Scale Units Linear Gauge LGS/LGD	2	800

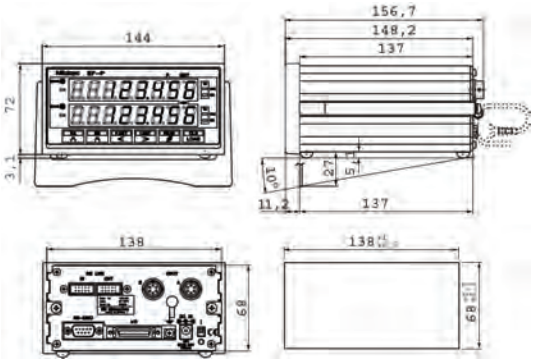

Functions	Series 542 542-071D 542-073D	542-072D	542-075D
Digimatic data output	●	●	●
ON/OFF	●	●	●
External PRESET/ZERO	●	●	●
ZERO SET	●	●	●
PRESET	●	●	●
Sum/difference calculation	●	●	
ABS/INC		●	
Counting direction switchable	●	●	●
BCD output	●	●	●
Error display/output	●	●	●
External HOLD	●	●	●
MAX / MIN / Difference measurement	●	●	●
mm / inch switching	●	●	●
External peak-hold cancel	●	●	●
Lower digit blank-out			●
RS link	●	●	●
RS-232C Output	●	●	●
I/O Output	●	●	●
USB Output for SENSORPAK	●	●	●
Analogue output	●	●	●
Extern tolerance set (when a PC is used)	●	●	●

Specifications

Power supply	Via AC Adapter (12-24 V DC, 700 mA)
Display	Green LED display, 8 digit plus sign
Tolerance judgement display	LED display (3 steps : Amber, Green, Red/5 steps : Amber, Amber flashing, Green, Red flashing, Red)

Standard accessories

No.	Description
02ADN460	Adaptor 220V
02ZAA020	AC Cable

Optional accessories

No.	Description
02ADB440	Data Plug I/O Interface, for Litematic
936937	Digimatic Cable, Flat 10-Pin Type, 1 m
965014	Digimatic Cable, Flat 10-Pin Type, 2 m
06ADV380D	USB Input Tool Direct (Digimatic USB) cable, Flat 10-Pin Type, 2 m
02AZD790D	U-WAVE T Connection Cable D, Flat 10-Pin Type
12AAA807D	Cable RS-232C 2m

02ADB440

All products to be sold to commercial customers. Product illustrations are without obligation. Product descriptions, in particular any and all technical specifications, are only binding when explicitly agreed upon. For suggested retail prices, please refer to the separate price list.

EV Counter for Linear Gauges

Series 542

- You can connect up to six gauges, and by using the RS Link function, you can connect up to 10 EV Counters to one PC.
- Multi-point measuring systems with a maximum of 60 gauges can be configured.
- You can select several different output modes, including I/O output for tolerance judgement and Segment output, BCD data output and RS-232C output.

Functions	Series 542 542-063 542-067	Series 542 542-064
Digimatic data output	●	●
External PRESET/ZERO	●	●
ZERO SET	●	●
PRESET	●	●
ABS/INC		●
Counting direction switchable	●	●
Calculation function	●	●
Error display/output	●	●
External HOLD	●	●
MAX / MIN / Difference measurement	●	●
mm / inch switching	●	●
RS link	●	●
RS-232C Output	●	●

Specifications

Power supply	Terminal connector (M3 screws), 12 to 24V, (700 mA max. for EV-Counter) (200 mA max. for D-EV Display unit), AC-adapter is not standard accessory
Display	D EV Unit: red LED display, 6 digit plus sign 8 digit internal to EV-Counter
Tolerance judgement display	LED display (3 steps: Amber, Green, Red)

Optional accessories

No.	Description
02ADD400	D-EV Display Unit
02ADB440	Data Plug I/O Interface, for Litematic
02ADN460	Adaptor 220V
02ZAA020	AC Cable
02ADD930	Connecting Cable, 3-Wires for AC Adapter
02ADD950	External Switch Box, EB Counter
936937	Digimatic Cable, Flat 10-Pin Type, 1 m
965014	Digimatic Cable, Flat 10-Pin Type, 2 m
06ADV380D	USB Input Tool Direct (Digimatic USB) cable, Flat 10-Pin Type, 2 m
12AAA807D	Cable RS-232C 2m

02ADD400

02ADB440

02ADD930, 02ADN460, 02ZAA020

542-063

542-067

542-064

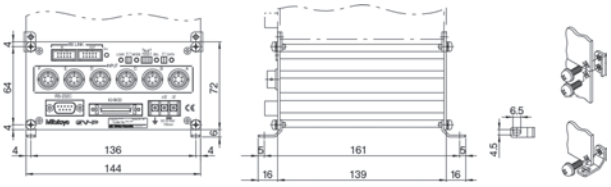

542-063

No.	Resolution [mm]	Max. input frequency	Input signal type	Applicable gauge	Gauge inputs	Mass [g]
542-063	0,0005/0,001/0,005/0,01 (no display)	1,25 MHz (2-phase square wave), response speed depends on gauge specification. Max.counting speed: 5MHz	Differential square-wave	LGF, LGK, LGB, LG, LGM, LGH (excluding LGF-Z with reference point, LGH with 0,01 µm resolution)	6	910
542-067	0,0005/0,001/0,005/0,01 (no display)	1,25 MHz (2-phase square wave), response speed depends on gauge specification. Max.counting speed: 5MHz	Differential square wave with reference point	LGF-Z with reference point	6	910
542-064	0,001/0,01 (automatic setting by gauge)	-	Digimatic code	Digimatic Indicator Digimatic Scale Units Linear Gauge LGS/LGD	6	830

Specifications for 02ADD400

No.	Description
02ADD400	Allows external display and setting for one EV Counter **LED display:** channel display (also for judgement result display): 3 (3-color LED) measurement mode display (current data, max. value, min. value, range): 2 **Functions:** channel switching, measurement mode switching (current value, max. value, min. value, range), parameter setting, preset, and tolerance setting **Input/output:** RS Link connector: 1 each for IN, OUT **Error display:** overspeed and others

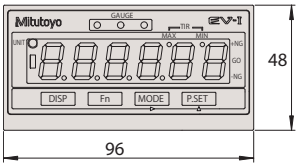

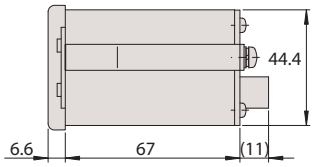

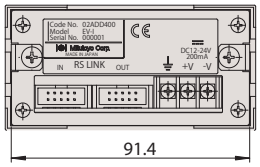

All products to be sold to commercial customers. Product illustrations are without obligation. Product descriptions, in particular any and all technical specifications, are only binding when explicitly agreed upon. For suggested retail prices, please refer to the separate price list.

Inductive Probe Mu-Checker

Series 519

- A half-bridge circuit connection.
- 519-321 lever head is provided with a direction switch.
- The contact point of 519-326 lever head can be orientated at any direction.

519-521

519-522

519-326

519-331

519-385

519-347

519-346

Cartridge type

No.	Range	Stroke [mm]	Remarks	Linearity [%]	Measuring force [N]
519-331	± 0,5	± 0,65	low force type	± 0,5	0,25
519-385	± 1,5	+ 2,3 - 1,7	standard type	± 0,3	0,7 ± 0,14 N
519-346	± 0,25	+0,34 -0,26	compact type inside	± 0,3	0,7
519-347	± 0,5	+ 0,85 - 0,65	compact type	± 0,3	0,7

Lever type

No.	Range	Stroke [mm]	Remarks	Linearity [%]	Measuring force [N]	Mass [g]
519-521	± 0,5	± 0,6	pivot bearing switch type reversible direction	± 0,3	0,2	112
519-522	± 0,5	± 0,6	pivot bearing low measuring force type	± 0,3	0,02	112
519-326	± 0,5	± 0,6	parallel spring high accuracy type	± 0,3	0,15	112

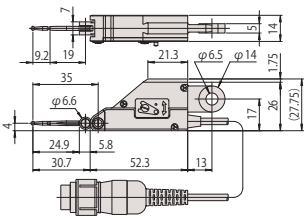

519-521

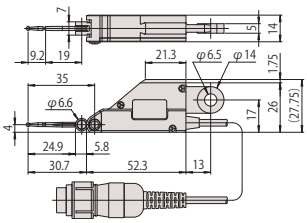

519-522

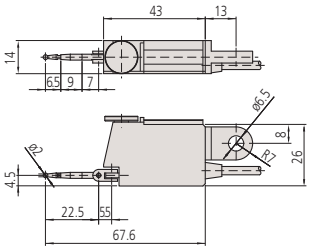

519-326

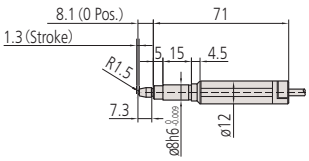

519-331

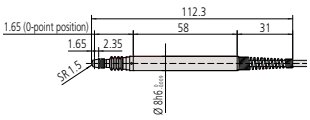

519-385

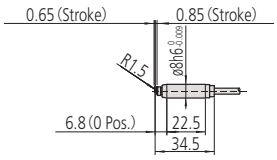

519-347

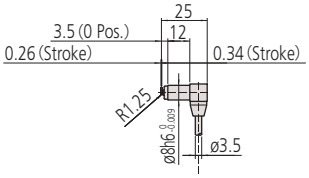

519-346

Specifications

Scale	Linear Voltage differential transformer (half bridge)
Calibration voltage	3 V rms (sine wave)
Calibration frequency	5 kHz
Connector	DIN 5pin
Delivered	with 2 m cable, carbide-tipped stylus ⌀ 1 mm (520940), stylus ⌀ 2 mm (520939), stylus ⌀ 3 mm (520938)

Optional accessories

No.	Description
900321	Swivel Clamp, for Ø4/8mm, Dovetail
902802	Stem with Knurled Clamp Ring, Ø4mm Stem
902804	Stem with Knurled Clamp Ring, Ø8mm Stem
900209	Holding Bar for Swivel Clamp, 9x9mm, 100mm Length
900211	Holding Bar for Swivel Clamp, Ø8mm, 115mm Length

902321

902802

902804

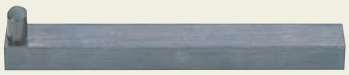

900209

900211

All products to be sold to commercial customers. Product illustrations are without obligation. Product descriptions, in particular any and all technical specifications, are only binding when explicitly agreed upon. For suggested retail prices, please refer to the separate price list.

Display Mu-Checker

Series 519

– The Analog Mu-Checker can output digital data via an optional interface unit.

Functions	Series 519		
	519-551D	519-553D	519-561D
ZERO SET	●	●	●
Calculation function		●	●
Digimatic Output			●

Specifications

Dimensions (WxDxH)	134 x 183 x 208 mm
Output Gain	± 1V/FS Linearity: ±0,1%/FS (Excepts a head's measuring error)
Power supply	AC Adapter 230V 50/60Hz

Optional accessories

No.	Description
934795	Signal Cable A
529035	Connector 7P, 519-413
934386	Extension Cord A
936937	Digimatic Cable, Flat 10-Pin Type, 1 m
965014	Digimatic Cable, Flat 10-Pin Type, 2 m

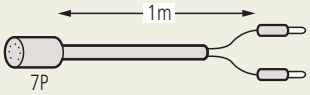

529035

519-551D

519-553D

519-561D

No.	Linearity [%]	Response speed	Instant zero-setting effective zone	Channels	Mass [kg]
519-551D	± 1%/FS (Added to a head's measuring error)	approx. 0,3s	± 15%/FS	1	2,4
519-553D	± 1%/FS (Added to a head's measuring error)	approx. 0,3s	± 15%/FS	2	2,4
519-561D	± 3 digit ± 1 (added to a head measuring error)	approx. 0,3s	± 0,68 mm	2	2,6

FS=Full Screen

All products to be sold to commercial customers. Product illustrations are without obligation. Product descriptions, in particular any and all technical specifications, are only binding when explicitly agreed upon. For suggested retail prices, please refer to the separate price list.

LITEMATIC VL-50
Motorized low force, high precision gauges

Series 318

This is a high-accuracy motorised measuring machine with safe and easy operation.
The LITEMATIC VL-50 offers you the following benefits:

- It has a measuring force of **0,01 N** (1 gf) and a resolution of 0,01 µm.
- Its constant and low measuring force makes it especially suitable for measuring soft materials such as rubber, plastic, film thicknesses or sensitive form parts.
- The motor driven plunger gives you a range of approach and retraction speeds for safe and easy operation.

318-22xD

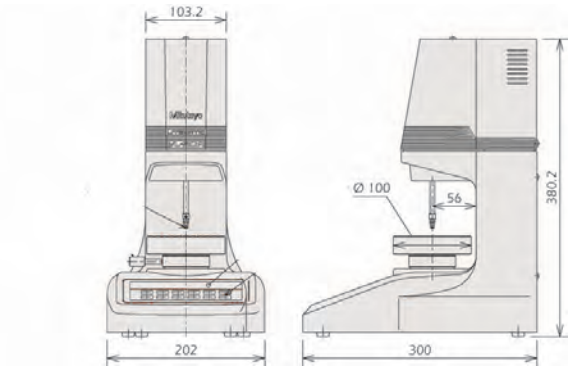

318-22xD

318-217D

No.	Measuring force	Accuracy	Type
318-217D	0,01 N (1 gf)	**(0,1 + 0,5L/100)** µm L = Measurement height	VL-50 AH
318-221D	**0,01 N** (1 gf)	**(0,5 + L/100)** µm L = Measurement height	VL-50 B
318-222D	0,15 N (15 gf)	**(0,5 + L/100)** µm L = Measurement height	VL-50-15-B
318-223D	1 N (102 gf)	**(0,5 + L/100)** µm L = Measurement height	VL-50-100-B

Functions	Series 318
ZERO/ABS	●
Data output	●
PRESET	●
Counting direction switchable	●
mm / inch switching	●
Key lock	●
Tolerance input (3 or 5 levels)	●
Motorized plunger movement	●
Mode : max-min (TIR) reading	●

Specifications

Measuring range (inside)	0-50 mm
Data output	Digimatic RS-232C INTERFACE I/O

Optional accessories

No.	Description
937179T	Footswitch for SPC
02ADB440	Data Plug I/O Interface, for Litematic
936937	Digimatic Cable, Flat 10-Pin Type, 1 m
965014	Digimatic Cable, Flat 10-Pin Type, 2 m
12AAA807D	Cable RS-232C 2m
06ADV380D	USB Input Tool Direct (Digimatic USB) cable, Flat 10-Pin Type, 2 m
02AZD790D	U-WAVE T Connection Cable D, Flat 10-Pin Type

Consumable spares

No.	Description
901312	Contact Element Ball Point, 7,3mm Length, Carbide, Metric

Refer to the LITEMATIC documentation for more details

All products to be sold to commercial customers. Product illustrations are without obligation. Product descriptions, in particular any and all technical specifications, are only binding when explicitly agreed upon. For suggested retail prices, please refer to the separate price list.

LITEMATIC VL-50
Motorized low force, high precision gauges

Functions	Series 318
ZERO/ABS	●
Data output	●
PRESET	●
Counting direction switchable	●
mm / inch switching	●
Key lock	●
Tolerance input (3 or 5 levels)	●
Motorized plunger movement	●
Mode : max-min (TIR) reading	●

Specifications

Measuring range (inside)	0-50 mm
Data output	DIGIMATIC RS 232C INTERFACE I/O

Optional accessories

No.	Description
957460	Litematic Head Stand
937179T	Footswitch for SPC
02ADB440	Data Plug I/O Interface, for Litematic
936937	Digimatic Cable, Flat 10-Pin Type, 1 m
965014	Digimatic Cable, Flat 10-Pin Type, 2 m
12AAA807D	Cable RS-232C 2m
06ADV380D	USB Input Tool Direct (Digimatic USB) cable, Flat 10-Pin Type, 2 m
02AZD790D	U-WAVE T Connection Cable D, Flat 10-Pin Type

Consumable spares

No.	Description
901312	Contact Element Ball Point, 7,3mm Length, Carbide, Metric

Refer to the LITEMATIC documentation for more details

Series 318

This is a high-accuracy gauge head with a separate controller.
The LITEMATIC VL-50 offers you the following benefits:

- It has a measuring force of **0,01 N** (1 gf) and a resolution of 0,01 µm.
- Its constant and low measuring force makes it especially suitable for measuring soft materials such as rubber, plastic, film thicknesses or sensitive form parts.
- The motor driven plunger gives you a range of approach and retraction speeds for safe and easy operation.
- The head is supplied with a separate controller so you can mount it in a measurement fixture, or on the optional comparator stand.

318-22xD (957460 is optional)

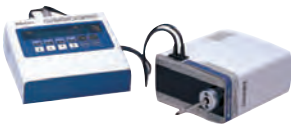

318-22xD

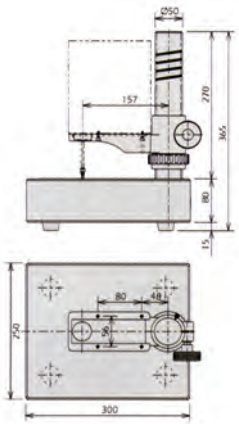

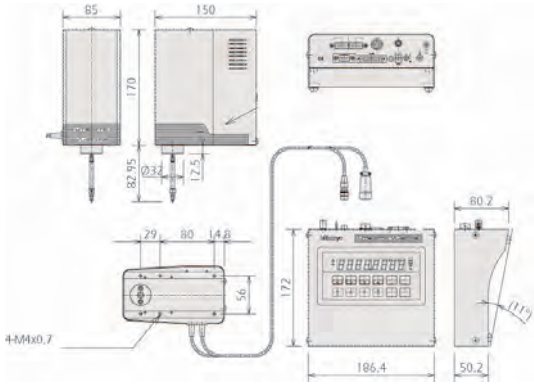

957460 Comparator stand

No.	Measuring force	Accuracy	Type
318-226D	**0,01 N** (1 gf)	**(0,5 + L/100)**µm L = Measurement height	VL-50S-B
318-227D	**0,15 N** (15 gf)	**(0,5 + L/100)**µm L = Measurement height	VL-50S-15-B
318-228D	**1 N** (102 gf)	**(0,5 + L/100)**µm L = Measurement height	VL-50S-100-B

All products to be sold to commercial customers. Product illustrations are without obligation. Product descriptions, in particular any and all technical specifications, are only binding when explicitly agreed upon. For suggested retail prices, please refer to the separate price list.

Laser Scan Micrometer Measuring Unit and Display Unit Package
Page 383

Laser Scan Micrometer Measuring Unit
Page 384

Laser Scan Micrometer
Page 387

Laser Scan Micrometer Display Unit
Page 388

Laser Scan Micrometer Optional Accessories
Page 390

All products to be sold to commercial customers. Product illustrations are without obligation. Product descriptions, in particular any and all technical specifications, are only binding when explicitly agreed upon. For suggested retail prices, please refer to the separate price list.

Laser Scan Micrometer Measuring Unit and Display Unit Package

Functions	Series 544
GO/±NG judgement	●
OFFSET	●
Sample Measurement	●
Statistical calculation	●
Data output	●
ZERO SET	●
PRESET	●
Group judgement	●
Workpiece position display	●
Transparent object measurement	●
Automatic measurement	●
Abnormal data elimination	●

Specifications

Linearity at 20°C *1	Entire range : ±0,5 µm Narrow range : ±(0,3+0,1ΔD) µm
Positional error *2	±0,5 µm
Repeatability (±2σ)	±0,05 µm
Measuring region	3 x 25 mm
Laser wavelength	650 nm, Visible
Scanning rate	800 scans/s
Scanning speed	56m/s
Applicable laser standards	IEC
Main display	16-digit fluorescent tube
Interface units equipped	RS-232C, Analog I/O, Footswitch
Power supply	100 - 240VAC, 40 VA, 50/60Hz

Optional accessories

No.	Description
02AGD180	Calibration Gauge Set, Ø1-25
02AGD270	Workstage for LSM
02AGD280	Workstage for LSM

*1 At the centre of the measuring region
*2 Potential measurement error due to variation in workpiece position within the measuring region
ΔD = Difference in diameter between the mastergauge and workpiece

Series 544

The LSM-902/6900 is a high accuracy, non-contact measuring system that uses a high speed scanning laser beam to accurately measure workpieces. It is ideal for measuring items that are difficult or impossible to measure with conventional instruments, such as elastic parts or soft parts that might deform under pressure.
The LSM-902/6900 offers you the following benefits:
- Suitable for pin and plug gauge measurements.
- It has a wide measuring range of 0,1 mm to 25 mm.
- Provides ultra-high accuracy with a linearity of ±0,5 µm over the entire measuring range and ±(0,3+0,1ΔD) µm in the narrow range.
- Ultra-high repeatability of ±0,05 µm.

LSM-6900 display unit

LSM-902 measuring unit

Metric

No.	Range [mm]	Resolution (selectable)
544-495D	0,1-25	0,01-10 µm

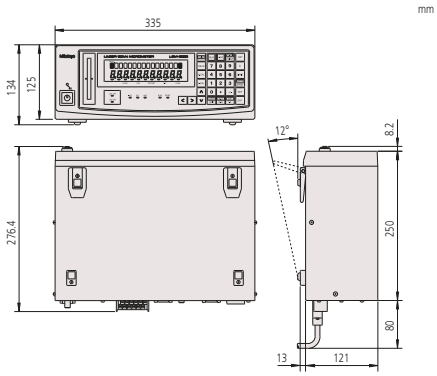

LSM-6900 display unit

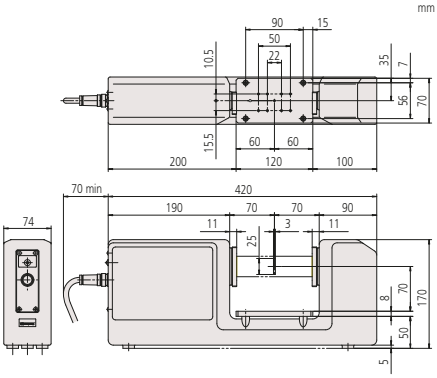

LSM-902 measuring unit

All products to be sold to commercial customers. Product illustrations are without obligation. Product descriptions, in particular any and all technical specifications, are only binding when explicitly agreed upon. For suggested retail prices, please refer to the separate price list.

Laser Scan Micrometer Measuring Unit

Series 544

LSM-500S

High Accuracy Non-contact Measuring System
- Measuring range starting from ø5 µm.
- Provides ultra-high accuracy with a linearity of ±0,3 µm over the entire measuring range (5 µm up to 2 mm).
- Ultra-high repeatability of ±0,03 µm.
- High scanning rate of 3200 scans/s

LSM-500S

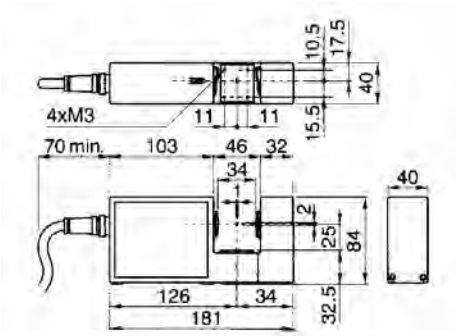

Metric

No.	Range [mm]	Resolution (selectable)
544-532	0,005-2	0,00001-0,01 mm

Specifications

Linearity at 20°C *1	±0,3 µm
Positional error *2	±0,4 µm
Repeatability (±2σ)	±0,03 µm
Measuring region	1 x 2 mm
Laser wavelength	650 nm, Visible
Scanning rate	3200 scans/s
Scanning speed	76m/s
Applicable laser standards	IEC, FDA

Optional accessories

No.	Description
02AGD110	Membrane sheet, LSM-9506
02AGD200	Wire guiding pulley, for LSM-500
02AGD220	Air Shield LSM-500S
957608	Air Cleaner for Air Shield
02AGN780A	Extension Signal Cable 5m
02AGN780B	Extension Signal Cable 10m
02AGN780C	Extension Signal Cable 15m

Series 544

LSM-501S

High Accuracy Non-contact measuring system
- Provides ultra-high accuracy with a linearity of ±0,5 µm over the entire measuring range (0,05 mm to 10 mm) and ±(0,3+0,1ΔD) µm in the narrow range.
- Ultra-High repeatability of ±0,04 µm.
- High scanning rate of 3200 scans/s

LSM-501S

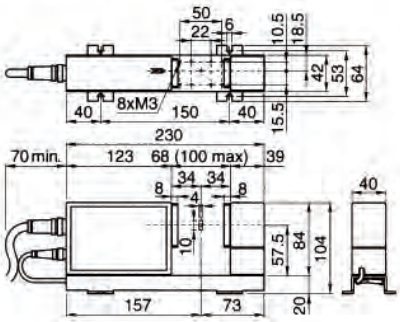

Metric

No.	Range [mm]	Resolution (selectable)
544-534	0,05-10	0,00001-0,01 mm

Specifications

Linearity at 20°C *1	Entire range : ± 0,5 µm Narrow range : ±(0,3+0,1ΔD) µm
Positional error *2	±0,5 µm
Repeatability (±2σ)	±0,04 µm
Measuring region	2 x 10 mm (ø0,05-0,1 mm) 4 x 10 mm (ø0,1-10 mm)
Laser wavelength	650 nm, Visible
Scanning rate	3200 scans/s
Scanning speed	113 m/s
Applicable laser standards	IEC, FDA

Optional accessories

No.	Description
02AGD120	Calibration Gauge Set, Ø 0,1 - 10mm
02AGD210	Wire guiding pulley, for LSM 501S
02AGD400	Workstage for LSM
02AGD440	Centre support LSM-501S/503S/902
02AGD450	V-Block
02AGD230	Air Shield LSM-501S
957608	Air Cleaner for Air Shield
02AGC150A	Relay Extension Cable
02AGN780A	Extension Signal Cable 5m
02AGN780B	Extension Signal Cable 10m
02AGN780C	Extension Signal Cable 15m

02AGD440 and 02AGD450 : use with an adjustable workstage

*1 At the centre of the measuring region
*2 Potential measurement error due to variation in workpiece position within the measuring region
ΔD = Difference in diameter between the mastergauge and workpiece

Refer to the LSM brochure

All products to be sold to commercial customers. Product illustrations are without obligation. Product descriptions, in particular any and all technical specifications, are only binding when explicitly agreed upon. For suggested retail prices, please refer to the separate price list.

Laser Scan Micrometer Measuring Unit

Series 544

LSM-503S

High Accuracy Non-contact measuring system
- General-purpose type with a measuring range of 0,3 mm to 30 mm.
- Provides high accuracy with a linearity of ±1 µm over the entire measuring range and ±(0,6+0,1ΔD) µm in the narrow range.
- Excellent repeatability of ±0,1 µm.
- High scanning rate of 3200 scans/s.

Specifications

Linearity at 20°C *1	Entire range : ±1 µm Narrow range : ±(0,6+0,1ΔD) µm
Positional error *2	±1,5 µm
Repeatability (±2σ)	±0,11 µm
Measuring region	10 x 30 mm
Laser wavelength	650 nm, Visible
Scanning rate	3200 scans/s
Scanning speed	226 m/s
Applicable laser standards	IEC, FDA

Optional accessories

No.	Description
02AGD130	Calibration Gauge Set, Ø 1 - 30 mm
02AGD490	Workstage for LSM
02AGD440	Centre support LSM-501S/503S/902
02AGD450	V-Block
02AGD240	Air Shield LSM-503S
957608	Air Cleaner for Air Shield
02AGC150A	Relay Extension Cable
02AGC150B	Relay Extension Cable

02AGD440 and 02AGD450 : use with an adjustable workstage

LSM-503S

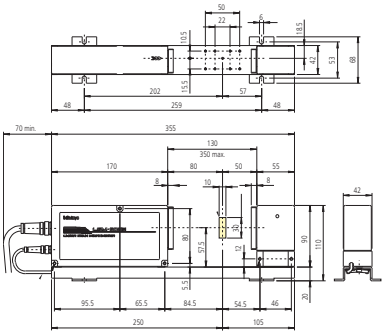

Metric

No.	Range [mm]	Resolution (selectable)
544-536	0,3-30	0,00002-0,1 mm

Series 544

LSM-506S

High Accuracy Non-contact Measuring System
- General-purpose type with a measuring range of 1 mm to 60 mm.
- Provides high accuracy with a linearity of ±3 µm over the entire measuring range and ±(1,5+0,5ΔD) µm in the narrow range.
- Excellent repeatability of ±0,36 µm.
- High scanning rate of 3200 scans/s.

Specifications

Linearity at 20°C *1	Entire Range : ±3 µm Narrow range : ±(1,5+0,5ΔD) µm
Positional error *2	±4 µm
Repeatability (±2σ)	±0,36 µm
Measuring region	20 x 60 mm
Laser wavelength	650 nm, Visible
Scanning rate	3200 scans/s
Scanning speed	452 m/s
Applicable laser standards	IEC, FDA

Optional accessories

No.	Description
02AGD140	Calibration Gauge Set, Ø 1 - 60 mm
02AGD520	Workstage for LSM
02AGD580	Centre support LSM-506S/9506
02AGD590	V-Block
02AGD250	Air Shield LSM-506S
957608	Air Cleaner for Air Shield
02AGC150A	Relay Extension Cable
02AGC150B	Relay Extension Cable

02AGD580 and 02AGD590 : use with an adjustable workstage

*1 At the centre of the measuring region *2 Potential measurement error due to variation in workpiece position within the measuring region
ΔD = Difference in diameter between the mastergauge and workpiece

LSM-506S

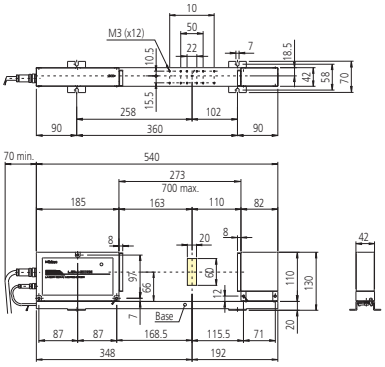

Metric

No.	Resolution (selectable)
544-538	0,00005-0,1 mm

Refer to the LSM brochure

All products to be sold to commercial customers. Product illustrations are without obligation. Product descriptions, in particular any and all technical specifications, are only binding when explicitly agreed upon. For suggested retail prices, please refer to the separate price list.

Laser Scan Micrometer Measuring Unit

Series 544

LSM-512S

High Accuracy Non-contact measuring system
- General-purpose type with a wide measuring range of 1 mm to 120 mm.
- Provides high accuracy with a linearity of ±6 µm over the entire measuring range and ±(4+0,5ΔD) µm in the narrow range.
- Excellent repeatability of ±0,8 µm.
- High scanning rate of 3200 scans/s

LSM-512S

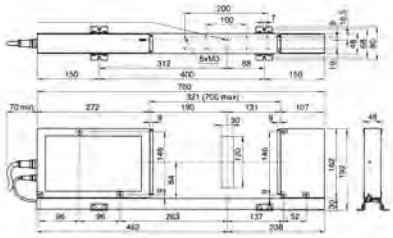

Metric

No.	Range [mm]	Resolution (selectable)
544-540	1-120	0,0001-0,1 mm

Specifications

Linearity at 20°C *1	Entire range : ±6 µm Narrow range : ±(4+0,5ΔD) µm
Positional error *2	±8 µm
Repeatability (±2σ)	±0,8 µm
Measuring region	30 x 120 mm
Laser wavelength	650 nm, Visible
Scanning rate	3200 scans/s
Scanning speed	904 m/s
Applicable laser standards	IEC, FDA

Optional accessories

No.	Description
02AGD150	Calibration Gauge Set, Ø 20-120 mm
02AGD260	Air Shield LSM-512S
957608	Air Cleaner for Air Shield
02AGC150A	Relay Extension Cable
02AGC150B	Relay Extension Cable
02AGC150C	Relay Extension Cable
02AGN780A	Extension Signal Cable 5m
02AGN780B	Extension Signal Cable 10m
02AGN780C	Extension Signal Cable 15m
02AGN780D	Extension Signal Cable 20m

Series 544

LSM-516S

High Accuracy Non-contact measuring system
- General-purpose type with a wide measureming range of 1 mm to 160 mm.
- Provides high accuracy with a linearity of ±7 µm over the entire measuring range and ±(4+2ΔD) µm in the narrow range.
- Excellent repeatability of ±1,4 µm.
- High scanning rate of 3200 scans/s

LSM-516S

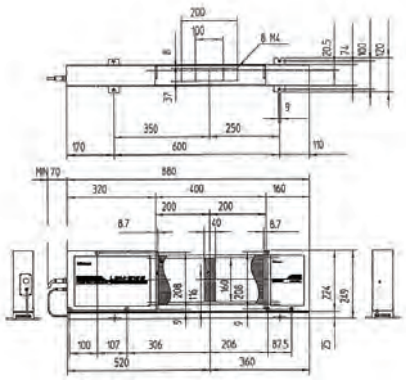

Metric

No.	Range [mm]	Resolution (selectable)
544-542	1-160	0,0001-0,1 mm

Specifications

Linearity at 20°C *1	Entire range : ±7 µm Narrow range : ±(4+2ΔD) µm
Positional error *2	±8 µm
Repeatability (±2σ)	±1,4 µm
Measuring region	40 x 160 mm
Laser wavelength	650 nm, Visible
Scanning rate	3200 scans/s
Scanning speed	1206 m/s
Applicable laser standards	IEC, FDA

Optional accessories

No.	Description
02AGM300	Calibration Gage Set, LSM Ø 20-160mm
02AGC150A	Relay Extension Cable
02AGC150B	Relay Extension Cable
02AGC150C	Relay Extension Cable
02AGN780A	Extension Signal Cable 5m
02AGN780B	Extension Signal Cable 10m
02AGN780C	Extension Signal Cable 15m
02AGN780D	Extension Signal Cable 20m

*1 At the centre of the measuring region
*2 Potential measurement error due to variation in workpiece position within the measuring region
ΔD = Difference in diameter between the mastergauge and workpiece

Refer to the LSM brochure

All products to be sold to commercial customers. Product illustrations are without obligation. Product descriptions, in particular any and all technical specifications, are only binding when explicitly agreed upon. For suggested retail prices, please refer to the separate price list.

Laser Scan Micrometer

Functions	Series 544
GO/±NG judgement	●
OFFSET	●
Sample Measurement	●
Statistical calculation	●
Data output	●
ZERO SET	●
PRESET	●
Group judgement	●
Workpiece position display	●
Transparent object measurement	●
Automatic measurement	●
Abnormal data elimination	●

Specifications

Linearity at 20°C *1	±2,5 µm
Positional error *2	±2,5 µm
Repeatability (±2σ)	±0,6 µm
Measuring region	10 x 60 mm
Laser wavelength	650 nm, Visible
Scanning rate	1600 scans/s
Scanning speed	226 m/s
Applicable laser standards	IEC
Main display	16-digit fluorescent tube
Interface units equipped	RS-232C, Digimatic, Foot Switch
Power supply	100-240VAC, 40VA, 50/60Hz

Refer to the LSM brochure

*1 At the centre of the measuring region

*2 Potential measurement error due to variation in workpiece position within the measuring region

Series 544

The LSM-9506 is a bench-top, non-contact measuring system that uses a high speed scanning laser beam to accurately measure workpieces. It is ideal for measuring items that are difficult or impossible to measure with conventional instruments, such as elastic parts or soft parts that might deform under pressure.

The LSM-9506 offers you the following benefits:

- Its measurement system has an integrated display, allowing easy bench-top inspection.
- A statistical calculation function is also provided.
- Includes standard RS-232C serial port and data output interface.

LSM-9506

Metric

No.	Range [mm]	Resolution (selectable)
544-115D	0,5-60	0,00005-0,1 mm

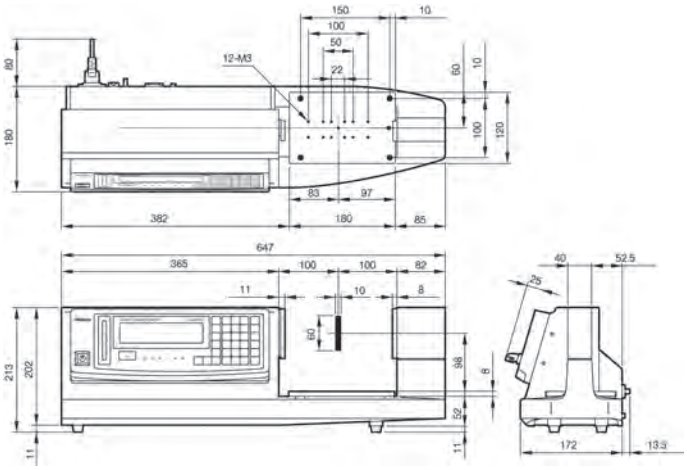

All products to be sold to commercial customers. Product illustrations are without obligation. Product descriptions, in particular any and all technical specifications, are only binding when explicitly agreed upon. For suggested retail prices, please refer to the separate price list.

Mitutoyo

Laser Scan Micrometer Display Unit

Series 544

The LSM-5200 Display Unit is a versatile display unit dedicated to Laser Scan Micrometers.
This dual-display design allows setup values to be continuously monitored with.
You can also get simultaneous readout of two measurement values, and segment measurement and edge measurement are both supported. Statistical calculation and abnormal-data elimination functions are provided as well.
The LSM-5200 Display Unit offers you the following benefits:

- Panel-mount type (with dimensions conforming to DIN 43700) making system integration easy.
- Capable of calculating mean, maximum, and range (maximum to minimum).
- You can select either segment measurement (7 segments max) or edge measurement (1 to 255 edges).
- USB, RS-232C, I/O and analogue interfaces are provided as standard.
- The arithmetical average or moving average can also be selected.
- GO/±NG judgement function.

LSM-5200 display unit

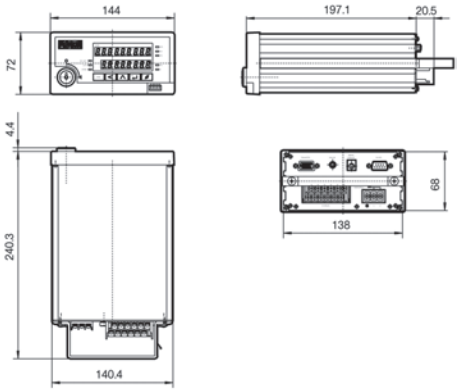

No.
544-047

Functions	Series 544
ZERO/ABS	●
GO/±NG judgement	●
OFFSET	●
Sample Measurement	●
Statistical calculation	●
Data output	●
PRESET	●
Workpiece position display	●
Transparent object measurement	●
Automatic measurement	●
Abnormal data elimination	●

Specifications

Main display	9-digit LED
Interface units equipped	USB2, RS-232C, Analog I/O, Foot Switch
Power supply	+24VDC ±10%, 1A

All products to be sold to commercial customers. Product illustrations are without obligation. Product descriptions, in particular any and all technical specifications, are only binding when explicitly agreed upon. For suggested retail prices, please refer to the separate price list.

Laser Scan Micrometer Display Unit

Functions	Series 544
GO/±NG judgement	●
OFFSET	●
Sample Measurement	●
Statistical calculation	●
Data output	●
ZERO SET	●
PRESET	●
Group judgement	●
Workpiece position display	●
Transparent object measurement	●
Automatic measurement	●
Abnormal data elimination	●

Specifications

Applicable laser standards	IEC, FDA (544-534), JIS (544-533)
Main display	16-digit fluorescent tube
Interface units equipped	RS-232C, Analog I/O, Foot Switch
Power supply	100-240V AC, 40 VA, 50/60Hz

Refer to the LSM brochure

Series 544

The LSM-6200 Display Unit is a versatile display unit dedicated to Laser Scan Micrometers. This dual-display design allows setup values to be continuously monitored with. You can also get simultaneous readout of two measurement values, and segment measurement and edge measurement are both supported. Statistical calculation and abnormal-data elimination functions are provided as well.

The LSM-5200 Display Unit offers you the following benefits:

- With this dual-display design, you can continuously monitor setup values, and also simultaneously display two measurement values.
- You can select either the segment measurement (7 segments max) or edge measurement (1 to 255 edges).
- Includes RS-232C and I/O and analogue interface capabilities.
- Includes statistical calculation and abnormal data eliminating functions.

LSM-6200 display unit

Metric

No.
544-071D

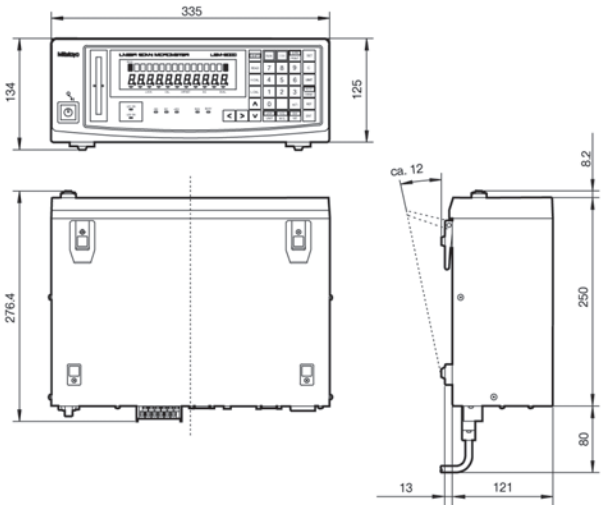

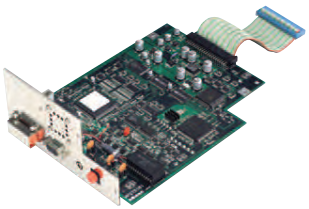

02agp150 - Dual-type add-on unit

All products to be sold to commercial customers. Product illustrations are without obligation. Product descriptions, in particular any and all technical specifications, are only binding when explicitly agreed upon. For suggested retail prices, please refer to the separate price list.

Mitutoyo

Laser Scan Micrometer Optional Accessories

Series 544 - Accessories

Refer to the LSM brochure

	No.	Application	Description
	02AGD110	LSM-500S	Calibration gauge set (ø0,1-2 mm)
	02AGD120	LSM-501S	Calibration gauge set (ø0,1-10 mm)
	02AGD130	LSM-503S	Calibration gauge set (ø1-30 mm)
	02AGD140	LSM-506S	Calibration gauge set (ø1-60 mm)
	02AGD150	LSM-512S	Calibration gauge set (ø20-120 mm)
	02AGD170	LSM-9506	Calibration gauge set (ø1-60 mm)
	02AGD180	LSM-902	Calibration gauge set (ø1-25 mm)
	02AGM300	LSM-516S	Calibration gage set (ø 20-160 mm)
	02AGD200	LSM-500S	Wire guiding pulley
	02AGD210	LSM-501S	Wire guiding pulley
	02AGD220	LSM-500S	Air shield
	02AGD230	LSM-501S	Air shield
	02AGD240	LSM-503S	Air shield
	02AGD250	LSM-506S	Air shield
	02AGD260	LSM-512S	Air shield
	957608	All LSM models	Air cleaner for air shield
	02AGD270	LSM-501S/503S/902	Workstage
	02AGD280	LSM-902	Adjustable workstage
	02AGD370	LSM-9506	Adjustable workstage
	02AGD400	LSM-501S	Adjustable workstage
	02AGD490	LSM-503S	Adjustable workstage
	02AGD520	LSM-506S	Adjustable workstage
	02AGD680	LSM-9506	Adjustable workstage
	02AGD440	LSM-501S/503S/902	Centre support
	02AGD580	LSM-506S/9506	Centre support
	02AGD450	LSM-501S/503S/902	Adjustable V-block
	02AGD590	LSM-506S/9506	Adjustable V-block
	937179T.		Footswitch

All products to be sold to commercial customers. Product illustrations are without obligation. Product descriptions, in particular any and all technical specifications, are only binding when explicitly agreed upon. For suggested retail prices, please refer to the separate price list.

Laser Scan Micrometer Optional Accessories

Refer to the LSM brochure

Series 544 - Accessories

	No.	Application	Description
Digimatic (SPC) code-out unit	02AGC840	LSM-6200/6900	Digimatic (SPC) code-out unit
	02AGC880	LSM-6200/6900	2nd I/O & analog interface
	02AGC910	LSM-6200/6900	BCD interface unit
Extension relay cable	02AGC150A	All LSM models (1)	Extension relay cable 1 m
	02AGC150B	All LSM models (1)	Extension relay cable 3 m
	02AGC150C	All LSM models (1)	Extension relay cable 5 m
	02AGC330A	All LSM models (1)	Output signal cable 5 m
	02AGC330B	All LSM models (1)	Output signal cable 10 m
Extension signal cable	02AGN780A	All LSM models (2)	Extension signal cable 5 m
	02AGN780B	All LSM models (2)	Extension signal cable 10 m
	02AGN780C	All LSM models (2)	Extension signal cable 15 m
	02AGN780D	All LSM models (2)	Extension signal cable 20 m
	02AGN780E	All LSM models (2)	Extension signal cable 30 m
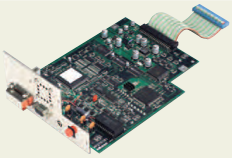 Dual-type add-on unit	02AGP150	LSM-6200	Dual-type add-on unit

(1) Except for LSM-500S/902
(2) Except for LSM-902

All products to be sold to commercial customers. Product illustrations are without obligation. Product descriptions, in particular any and all technical specifications, are only binding when explicitly agreed upon. For suggested retail prices, please refer to the separate price list.

Mitutoyo

Scale Units
Page 393

DRO linear scale & counter
Page 400

NC linear scales
Page 413

Separate scales
Page 422

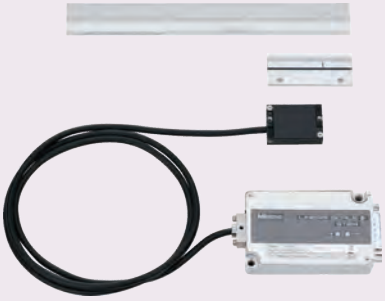

All products to be sold to commercial customers. Product illustrations are without obligation. Product descriptions, in particular any and all technical specifications, are only binding when explicitly agreed upon. For suggested retail prices, please refer to the separate price list.

Horizontal ABSOLUTE Scale Coolant Proof IP66

Functions	Series 572 - Horizontal
ORIGIN (ABS-Zero)	●
Auto Power OFF after 20 min. non use	●
Low voltage alarm	●
Data output	●

Specifications

Accuracy	Refer to the list of specifications (excluding quantizing error)
Digital step	0,01 mm
Repeatability	0,01 mm
Max. response speed	Unlimited

Optional accessories

No.	Description
05CZA624	Digimatic Cable with Data Button IP Type, 1m, Caliper Type
05CZA625	Digimatic Cable with Data Button IP Type, 2m, Caliper Type
02AZD790A	U-WAVE T Connection Cable A, with Data Button IP Caliper Type
06ADV380A	USB Input Tool Direct (Digimatic USB), with Data Button IP Caliper Type

Consumable spares

No.	Description
938882	Battery SR44 1.5V

Series 572 - Horizontal

IP66 ABSOLUTE®

You can use this scale unit in adverse environments with water and cutting oil due to it new detection method (electromagnetic induction).

- Specially designed output cables are developed to maintain the water resistant structure.
- You will have no overspeed error since the ABSOLUTE scale does not depend on counting scale graduations.
- Once an absolute zero (origin) point is set, the Digimatic Scale Unit shows the absolute distance from this point when it is powered on, rather than „0“.

572-601

Metric

No.	Range [mm]	Accuracy	L1 [mm]	L2 [mm]	Mass [g]
572-600	0-100	0,03 mm	209	185	390
572-601	0-150	0,03 mm	259	235	410
572-602	0-200	0,03 mm	311	287	430

Also available! Inch/Metric Models

mm

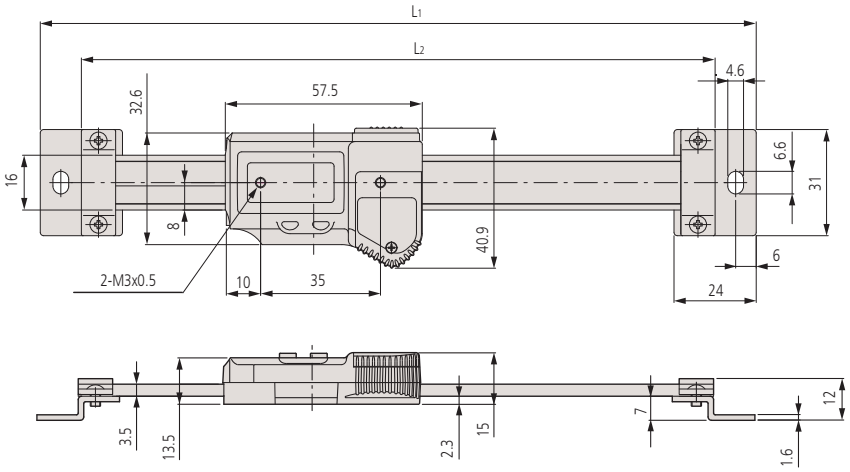

All products to be sold to commercial customers. Product illustrations are without obligation. Product descriptions, in particular any and all technical specifications, are only binding when explicitly agreed upon. For suggested retail prices, please refer to the separate price list.

Mitutoyo

Horizontal ABSOLUTE Scale Standard

Series 572

ABSOLUTE®

This unit has an ABSOLUTE capacitive-type scale.
- The ZERO point is set only once and is stored as the absolute ZERO point until the next battery replacement.
- You can make the highest precision measurements even at the highest drive speed.
- The display has large characters, making it easy to read.

572-202-20

Metric

No.	Range [mm]	Accuracy	L1 [mm]	L2 [mm]	Mass [g]
572-200-20	0-100	0,03 mm	209	185	230
572-201-20	0-150	0,03 mm	259	235	250
572-202-20	0-200	0,03 mm	311	287	270
572-203-10	0-300	0,04 mm	444	420	370

Also available! Inch/Metric Models

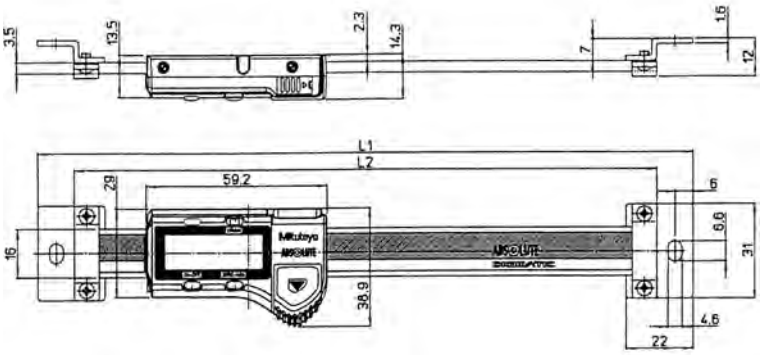

100-200 mm

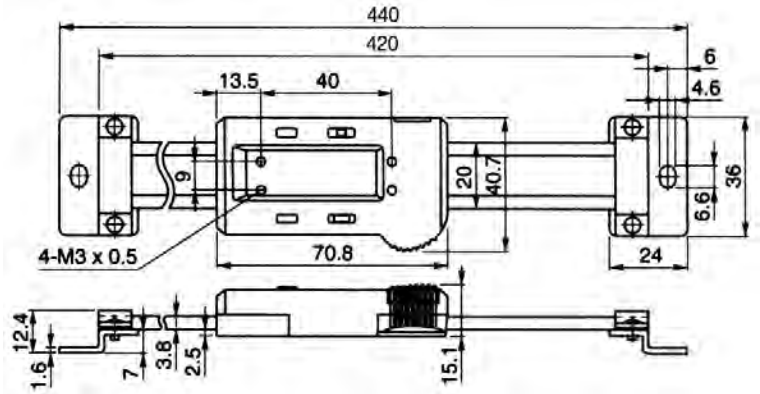

300 mm

Functions	Series 572
ON/OFF	●
Low voltage alarm	●
Data output	●
ZERO SET	●
ORIGIN	●

Specifications

Accuracy	Refer to the list of specifications (excluding quantizing error)
Digital step	0,01 mm
Max. response speed	Unlimited
Delivered	One battery

Optional accessories

No.	Description
905338	Digimatic Cable, Flat Straight Type, 1m
905409	Digimatic Cable, Flat Straight Type, 2 m
905689	Digimatic Cable, Flat L-Shape Type, 1 m
905690	Digimatic Cable, Flat L-Shape Type, 2 m
905691	Digimatic Cable, Flat L-Shape Right Type, 1m
905692	Digimatic Cable, Flat L-Shape Right Type, 2m
905693	Digimatic Cable, Flat L-Shape Left Type, 1m
905694	Digimatic Cable, Flat Straight Type 2m
959143	Data Hold Unit
959149	Digimatic Cable, Straight, Data Button, 1m
959150	Digimatic Cable, Straight, Data Button, 2m
02AZD790C	U-WAVE T Connection Cable C, Straight, with Data Button
06ADV380C	USB Input Tool Direct (Digimatic USB), Straight, with Data Button

Consumable spares

No.	Description
938882	Battery SR44 1.5V

All products to be sold to commercial customers. Product illustrations are without obligation. Product descriptions, in particular any and all technical specifications, are only binding when explicitly agreed upon. For suggested retail prices, please refer to the separate price list.

Horizontal ABSOLUTE Scale Measurement Direction Switching

Functions	Series 572
ON/OFF	●
DATA/HOLD	●
Low voltage alarm	●
Data output	●
ZERO SET	●
ORIGIN	●
PRESET	●
Counting direction switchable	●

Specifications

Accuracy	Refer to the list of specifications (excluding quantizing error)
Digital step	0,01 mm
Max. response speed	Unlimited
Delivered	One battery

Optional accessories

No.	Description
905338	Digimatic Cable, Flat Straight Type, 1m
905409	Digimatic Cable, Flat Straight Type, 2 m
905689	Digimatic Cable, Flat L-Shape Type, 1 m
905690	Digimatic Cable, Flat L-Shape Type, 2 m
905691	Digimatic Cable, Flat L-Shape Right Type, 1m
905692	Digimatic Cable, Flat L-Shape Right Type, 2m
905693	Digimatic Cable, Flat L-Shape Left Type, 1m
905694	Digimatic Cable, Flat Straight Type 2m
06ADV380C	USB Input Tool Direct (Digimatic USB), Straight, with Data Button
02AZD790C	U-WAVE T Connection Cable C, Straight, with Data Button

Consumable spares

No.	Description
938882	Battery SR44 1.5V

Series 572

ABSOLUTE®

This unit has an ABSOLUTE capacitive-type scale.
It offers you the following benefits:
- The ZERO point is set only once and is stored as the ABSOLUTE ZERO point until the next battery replacement.
- You can make the highest precision measurements even at the highest drive speed.
- The display has large characters, making it easy to read.

572-461

Metric

Without diameter function, with reversible counting direction

No.	Range [mm]	Accuracy	L1 [mm]	L2 [mm]	Mass [g]
572-460	0-100	0,03 mm	244	220	250
572-461	0-150	0,03 mm	294	270	280
572-462	0-200	0,03 mm	344	320	310
572-463	0-300	0,04 mm	444	420	370
572-464	0-450	0,04 mm	594	570	760
572-465	0-600	0,05 mm	774	750	900
572-466	0-800	0,06 mm	974	950	1710
572-467	0-1000	0,07 mm	1174	1150	2040

Also available! Inch/Metric Models

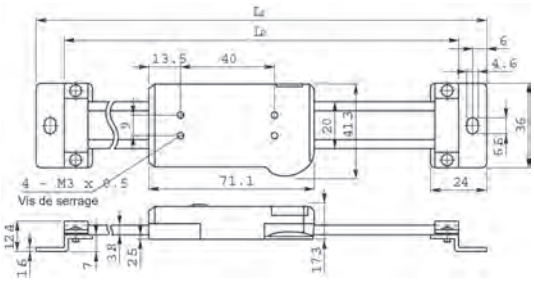

100-300 mm

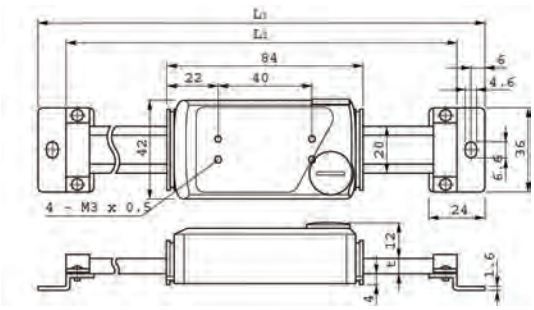

450-1000 mm

All products to be sold to commercial customers. Product illustrations are without obligation. Product descriptions, in particular any and all technical specifications, are only binding when explicitly agreed upon. For suggested retail prices, please refer to the separate price list.

Mitutoyo

Horizontal ABSOLUTE Scale Diameter Function

Series 572

ABSOLUTE®

- The ZERO point is set only once and is stored as the ABSOLUTE ZERO point until the next battery replacement
- You can make the highest precision measurements even at the highest drive speed.

572-483-10

Metric

Horizontal multi-function type with diameter displaying function

No.	Range [mm]	Accuracy	L1 [mm]	L2 [mm]	t [mm]	Mass [g]
572-480-10	0-100	0,03 mm	244	220		250
572-481-10	0-150	0,03 mm	294	270		280
572-482-10	0-200	0,03 mm	344	320		310
572-483-10	0-300	0,04 mm	444	420		370
572-484-10	0-450	0,04 mm	594	570	6	760
572-485-10	0-600	0,05 mm	774	750	6	900
572-486-10	0-800	0,06 mm	974	950	10	1710
572-487-10	0-1000	0,07 mm	1174	1150	10	2040

Also available! Inch/Metric Models

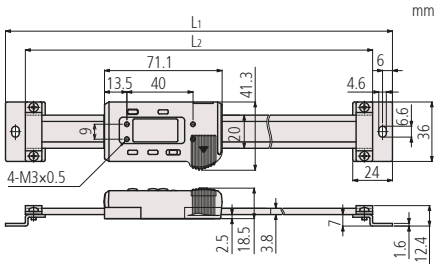

100-300 mm

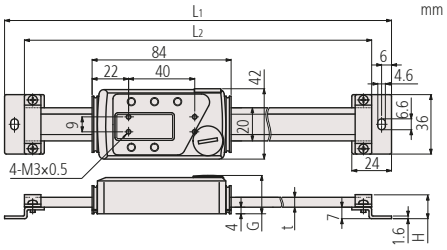

450-1000 mm

Functions	Series 572
ON/OFF	●
DATA/HOLD	●
Low voltage alarm	●
Data output	●
ZERO SET	●
PRESET	●
Diameter function	●
ORIGIN	●

Specifications

Accuracy	Refer to the list of specifications (excluding quantizing error)
Digital step	0,01 mm
Max response speed	Unlimited
Delivered	One battery

Optional accessories

No.	Description
905338	Digimatic Cable, Flat Straight Type, 1m
905409	Digimatic Cable, Flat Straight Type, 2 m
905689	Digimatic Cable, Flat L-Shape Type, 1 m
905690	Digimatic Cable, Flat L-Shape Type, 2 m
905691	Digimatic Cable, Flat L-Shape Right Type, 1m
905692	Digimatic Cable, Flat L-Shape Right Type, 2m
905693	Digimatic Cable, Flat L-Shape Left Type, 1m
905694	Digimatic Cable, Flat Straight Type 2m
06ADV380C	USB Input Tool Direct (Digimatic USB), Straight, with Data Button
02AZD790C	U-WAVE T Connection Cable C, Straight, with Data Button

Consumable spares

No.	Description
938882	Battery SR44 1.5V

All products to be sold to commercial customers. Product illustrations are without obligation. Product descriptions, in particular any and all technical specifications, are only binding when explicitly agreed upon. For suggested retail prices, please refer to the separate price list.

Vertical ABSOLUTE Scale Standard

Functions	Series 572
ON/OFF	●
Low voltage alarm	●
Data output	●
ZERO SET	●
Counting direction switchable	●
ORIGIN	●

Specifications

Accuracy	Refer to the list of specifications. (excluding quantizing error)
Digital step	0,01 mm
Max. response speed	Unlimited
Delivered	One battery

Optional accessories

No.	Description
959143	Data Hold Unit
905338	Digimatic Cable, Flat Straight Type, 1m
905409	Digimatic Cable, Flat Straight Type, 2 m
959149	Digimatic Cable, Straight, Data Button, 1m
959150	Digimatic Cable, Straight, Data Button, 2m
905689	Digimatic Cable, Flat L-Shape Type, 1 m
905690	Digimatic Cable, Flat L-Shape Type, 2 m
905691	Digimatic Cable, Flat L-Shape Right Type, 1m
905692	Digimatic Cable, Flat L-Shape Right Type, 2m
905693	Digimatic Cable, Flat L-Shape Left Type, 1m
905694	Digimatic Cable, Flat Straight Type 2m
06ADV380C	USB Input Tool Direct (Digimatic USB), Straight, with Data Button
02AZD790C	U-WAVE T Connection Cable C, Straight, with Data Button

Consumable spares

No.	Description
938882	Battery SR44 1.5V

Series 572

ABSOLUTE®

This unit has an ABSOLUTE capacitive-type scale.
It offers you the following benefits:
- The ZERO point is set only once and is stored as the absolute ZERO point until the next battery replacement.
- You can make the highest precision measurements even at the highest drive speed.
- The display has large characters, making it easy to read.

572-302-10

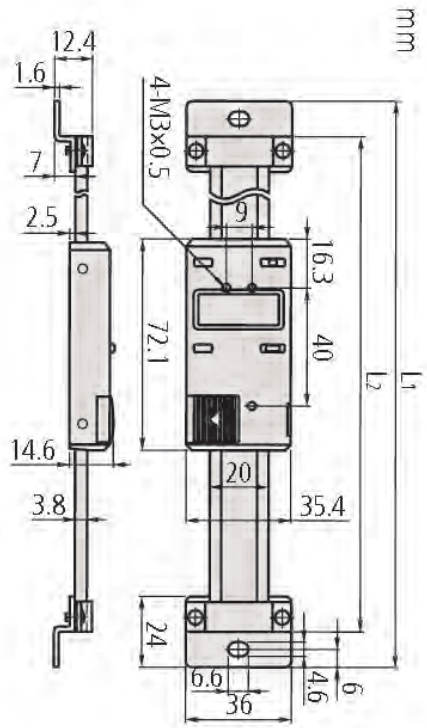

Metric

No.	Range [mm]	Accuracy	L1 [mm]	L2 [mm]	Mass [g]
572-300-10	0-100	0,03 mm	244	220	250
572-301-10	0-150	0,03 mm	294	270	280
572-302-10	0-200	0,03 mm	344	320	310
572-303-10	0-300	0,04 mm	444	420	370

Also available! Inch/Metric Models

All products to be sold to commercial customers. Product illustrations are without obligation. Product descriptions, in particular any and all technical specifications, are only binding when explicitly agreed upon. For suggested retail prices, please refer to the separate price list.

Mitutoyo

Vertical ABSOLUTE Scale Measurement Direction Switching

Series 572

ABSOLUTE®

This unit has an ABSOLUTE capacitive-type scale.
It offers you the following benefits:
- The ZERO point is set only once and is stored as the absolute ZERO point until the next battery replacement.
- The display has large characters, making it easy to read.
- Measurement direction switching function is included.

572-560

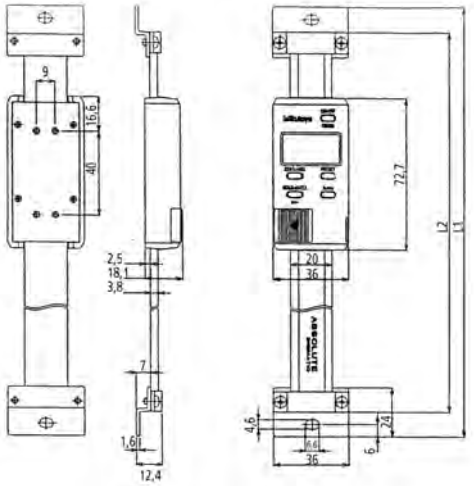

100-300 mm

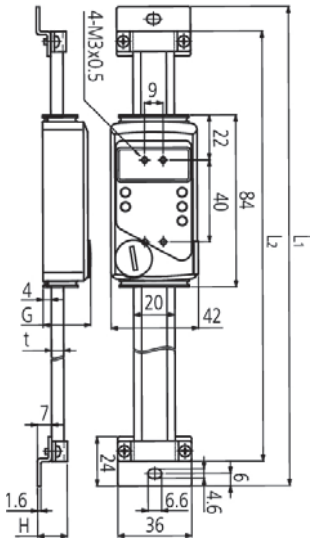

450-1000 mm

Metric

No.	Range [mm]	Accuracy	L1 [mm]	L2 [mm]	G [mm]	t [mm]	Mass [g]
572-560	0-100	0,03 mm	244	220			250
572-561	0-150	0,03 mm	294	270			280
572-562	0-200	0,03 mm	344	320			310
572-563	0-300	0,04 mm	444	420			370
572-564	0-450	0,04 mm	594	570	23,2	6	760
572-565	0-600	0,05 mm	774	750	23,2	6	900
572-566	0-800	0,06 mm	974	950	27,2	10	1710
572-567	0-1000	0,07 mm	1174	1150	27,2	10	2040

Also available! Inch/Metric Models

Functions	Series 572
ORIGIN (ABS-Zero)	●
ON/OFF	●
DATA/HOLD	●
Data output	●
ZERO SET	●
PRESET	●
Counting direction switchable	●

Specifications

Accuracy	Refer to the list of specifications (excluding quantizing error)
Digital step	0,01 mm
Max. response speed	Unlimited
Delivered	One battery

Optional accessories

No.	Description
905338	Digimatic Cable, Flat Straight Type, 1m
905409	Digimatic Cable, Flat Straight Type, 2 m
905689	Digimatic Cable, Flat L-Shape Type, 1 m
905690	Digimatic Cable, Flat L-Shape Type, 2 m
905691	Digimatic Cable, Flat L-Shape Right Type, 1m
905692	Digimatic Cable, Flat L-Shape Right Type, 2m
905693	Digimatic Cable, Flat L-Shape Left Type, 1m
905694	Digimatic Cable, Flat Straight Type 2m
06ADV380C	USB Input Tool Direct (Digimatic USB), Straight, with Data Button
02AZD790C	U-WAVE T Connection Cable C, Straight, with Data Button

Consumable spares

No.	Description
938882	Battery SR44 1.5V

All products to be sold to commercial customers. Product illustrations are without obligation. Product descriptions, in particular any and all technical specifications, are only binding when explicitly agreed upon. For suggested retail prices, please refer to the separate price list.

Vertical ABSOLUTE Scale Diameter Function

Functions	Series 572
ON/OFF	●
DATA/HOLD	●
Low voltage alarm	●
Data output	●
ZERO SET	●
PRESET	●
Diameter function	●
ORIGIN	●

Specifications

Accuracy	Refer to the list of specifications (excluding quantizing error)
Digital step	0,01 mm
Max. drive speed	Unlimited
Delivered	One battery

Optional accessories

No.	Description
905338	Digimatic Cable, Flat Straight Type, 1m
905409	Digimatic Cable, Flat Straight Type, 2 m
905689	Digimatic Cable, Flat L-Shape Type, 1 m
905690	Digimatic Cable, Flat L-Shape Type, 2 m
905691	Digimatic Cable, Flat L-Shape Right Type, 1m
905692	Digimatic Cable, Flat L-Shape Right Type, 2m
905693	Digimatic Cable, Flat L-Shape Left Type, 1m
905694	Digimatic Cable, Flat Straight Type 2m
06ADV380C	USB Input Tool Direct (Digimatic USB), Straight, with Data Button
02AZD790C	U-WAVE T Connection Cable C, Straight, with Data Button

Consumable spares

No.	Description
938882	Battery SR44 1.5V

Series 572

ABSOLUTE®

This unit has an ABSOLUTE capacitive-type scale.
- The ZERO point is set only once and is stored as the absolute ZERO point until the next battery replacement.
- The display has large characters, making it easy to read.
- Diameter measurement function is included.

572-580

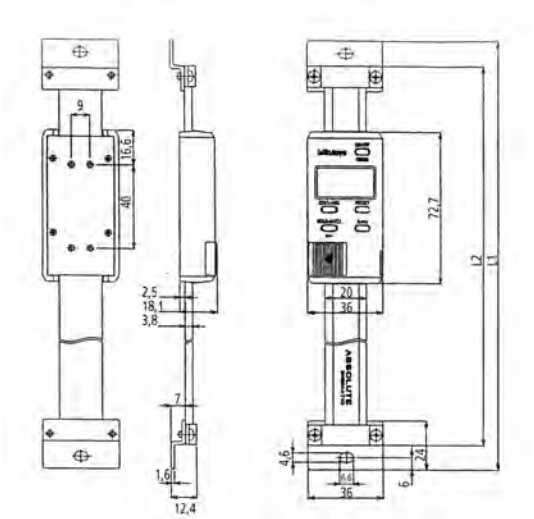

100-300 mm

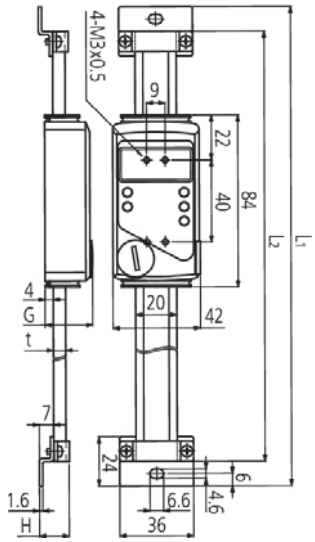

450-1000 mm

Metric

No.	Range [mm]	Accuracy	L1 [mm]	L2 [mm]	G [mm]	H [mm]	t [mm]	Mass [g]
572-580-10	0-100	0,03 mm	244	220				250
572-581-10	0-150	0,03 mm	294	270				280
572-582-10	0-200	0,03 mm	344	320				310
572-583-10	0-300	0,04 mm	444	420				370
572-584-10	0-450	0,04 mm	594	570	23,2	14,6	6	760
572-585-10	0-600	0,05 mm	774	750	23,2	14,6	6	900
572-586-10	0-800	0,06 mm	974	950	27,2	18,6	10	1710
572-587-10	0-1000	0,07 mm	1174	1150	27,2	18,6	10	2040

Also available! Inch/Metric Models

All products to be sold to commercial customers. Product illustrations are without obligation. Product descriptions, in particular any and all technical specifications, are only binding when explicitly agreed upon. For suggested retail prices, please refer to the separate price list.

Mitutoyo

DRO LINEAR SCALES AT103

Series 539 - sealed incremental - full size housing

These linear scales offer : Sturdy construction-high resistance to vibration-protection rating are similar in upright and reclining position

- The innovative rubber lips keep out contaminants when you are using the scale in a machine shop.
- An armoured signal cable is used to connect the scale unit to the DRO counter, so you can operate it safely even in hostile environments.
- The signal cable outlet can be positioned on either side of the slider so you can connect the signal cable from either direction.

539-133

No.	Cable length [m]	Effective range	L^1 [mm]	L^2 [mm]	L^3 [mm]	L^4 [mm]	L^5 [mm]	L^6 [mm]	Mass [kg]
539-111-30	3	100 mm	120	248	268				1,5
539-112-30	3	150 mm	170	298	318				
539-113-30	3	200 mm	220	348	368				
539-114-30	3	250 mm	270	398	418				
539-115-30	3	300 mm	330	458	478				
539-116-30	3	350 mm	380	508	528				
539-117-30	3	400 mm	430	558	578				
539-118-30	3	450 mm	480	608	628				
539-119-30	3	500 mm	540	668	688				
539-121-30	3	600 mm	650	778	798				2,6
539-123-30	3	700 mm	760	888	908				2,8
539-124-30	3	750 mm	810	938	958				2,9
539-125-30	3	800 mm	860	988	1008				3
539-126-30	3	900 mm	960	1088	1108				3,3
539-127-30	5	1000 mm	1060	1188	1208	594			3,7
539-128-30	5	1100 mm	1160	1288	1308	644			4
539-129-30	5	1200 mm	1260	1388	1408	694			4,2
539-130-30	5	1300 mm	1360	1488	1508	744			4,4
539-131-30	5	1400 mm	1460	1588	1608	794			4,6
539-132-30	5	1500 mm	1560	1688	1708	844			4,8
539-133-30	5	1600 mm	1690	1818	1838		610		5,1
539-134-30	5	1700 mm	1790	1918	1938		650		5,3
539-135-30	5	1800 mm	1890	2018	2038		670		5,5
539-136-30	5	2000 mm	2100	2228	2248		740		6
539-137-30	5	2200 mm	2300	2428	2448		800		6,4
539-138-30	7	2400 mm	2500	2628	2648	1314	1300	650	7,1
539-139-30	7	2500 mm	2600	2728	2748	1364	1340	670	7,3
539-140-30	7	2600 mm	2700	2828	2848	1414	1400	700	7,5
539-141-30	7	2800 mm	2900	3028	3048	1514	1500	750	7,9
539-142-30	7	3000 mm	3100	3228	3248	1614	1600	800	8,3

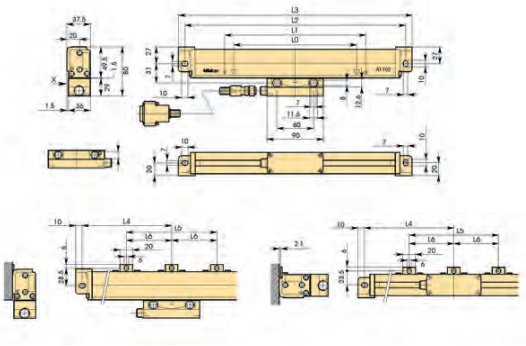

Specifications

Accuracy	(5+5L/1000) µm L = Effective range (mm)
Output waveform	Two 90° phase-shifted sinusoidal signals (2Vpp)
Max. drive speed	120 m/min.
Signal period	20 µm
Scale reference points	every 50 mm
Dust/water protection level	IP53
Operation temperature	0°C to 45°C
Power supply	5V DC ± 10%

Optional accessories

No.	Description
09AAA033A	Extension Cable 2M
09AAA033B	Extension Cable 5M
09AAA033C	Extension Cable 7M
174-147D	Linear Scale Counter KLD-214
174-183D	Linear Scale Counter KA-212
174-185D	Linear Scale Counter KA-213

Extension cable

Legend
L0 Effective range
L1 Travel range
L2 Bore centre distance
L3 Total length
L4-L6 Support bracket position

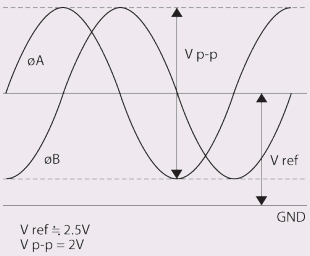

Output waveform

All products to be sold to commercial customers. Product illustrations are without obligation. Product descriptions, in particular any and all technical specifications, are only binding when explicitly agreed upon. For suggested retail prices, please refer to the separate price list.

DRO LINEAR SCALES AT103

Series 539 - sealed incremental - full size housing -larger measuring lenght

These linear scales offer : Sturdy construction-high resistance to vibration-protection rating are similar in upright and reclining position

- The innovative rubber lips keep out contaminants when you are using the scale in a machine shop.
- An armoured signal cable is used to connect the scale unit to the DRO counter, so you can operate it safely even in harsh environments.
- The signal cable outlet can be positioned on either side of the slider, so you can connect the signal cable from either direction.

539-133

Specifications

Accuracy	(5+8L/1000) µm L = Effective range (mm)
Output waveform	Two 90° phased-shifted sinusoidal signals (2Vpp)
Max. drive speed	50 m/min.
Signal period	20 µm
Scale reference points	every 50 mm
Dust/water protection level	IP53
Operation temperature	0°C to 45°C
Power supply	5V DC ± 10%

Optional accessories

No.	Description
09AAA033A	Extension Cable 2M
09AAA033B	Extension Cable 5M
09AAA033C	Extension Cable 7M
174-147D	Linear Scale Counter KLD-214
174-183D	Linear Scale Counter KA-212
174-185D	Linear Scale Counter KA-213

Extension cable

No.	Cable length [m]	Effective range	L^1 [mm]	L^3 [mm]	L^4 [mm]	L^5 [mm]	L^6 [mm]	Mass [kg]
539-143-30	10	3250 mm	3350	3470	135	3200	800	10,8
539-144-30	10	3500 mm	3600	3720	160	3400	850	11,4
539-145-30	10	3750 mm	3850	3970	125	3720	930	12
539-146-30	10	4000 mm	4100	4220	110	4000	1000	12,6
539-147-30	10	4250 mm	4350	4470	135	4200	1050	13,2
539-148-30	10	4500 mm	4600	4720	160	4400	1100	13,8
539-149-30	15	4750 mm	4850	4970	85	4800	800	15,2
539-150-30	15	5000 mm	5100	5220	120	4980	830	15,8
539-151-30	15	5250 mm	5350	5470	125	5220	870	16,4
539-152-30	15	5500 mm	5600	5720	130	5460	910	17
539-153-30	15	5750 mm	5850	5970	135	5700	950	17,6
539-154-30	15	6000 mm	6100	6220	110	6000	1000	18,2

Legend
L0 Effective range
L1 Travel range
L2 Bore centre distance
L3 Total length
L4-L6 Support bracket position

Please refer to the DRO leaflet for more details.

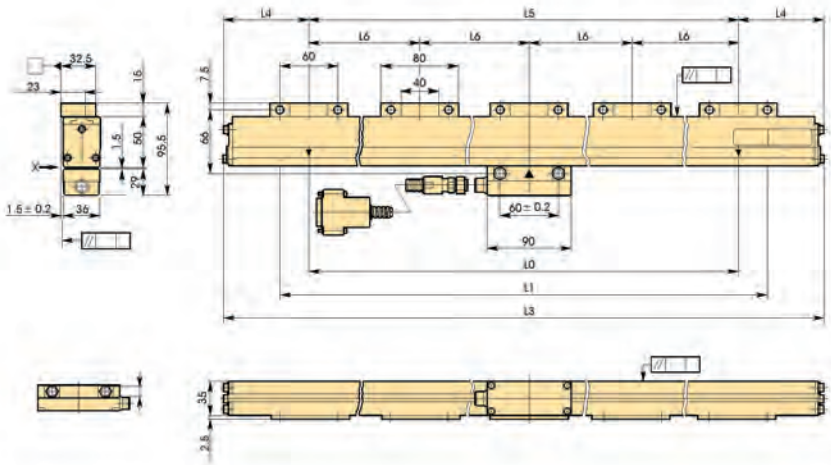

All products to be sold to commercial customers. Product illustrations are without obligation. Product descriptions, in particular any and all technical specifications, are only binding when explicitly agreed upon. For suggested retail prices, please refer to the separate price list.

DRO LINEAR SCALES AT103 - High Accuracy

Series 539 - sealed incremental - full size housing- with very high repeatability

These linear scales offer : Sturdy construction-high resistance to vibration-protection rating are similar in upright and reclining position

- The innovative rubber lips keep out contaminants when you are using the scale in a machine shop.
- An armoured signal cable is used to connect the scale unit to the DRO counter, so you can operate it safely even in harsh environments.
- The signal cable outlet can be positioned on either side of the slider so you can connect the signal cable from either direction.

539-133

No.	Cable length [m]	Effective range	L1 [mm]	L2 [mm]	L3 [mm]	L4 [mm]	L5 [mm]	Mass [kg]
539-111-40	3	100 mm	120	248	268			1,5
539-112-40	3	150 mm	170	298	318			
539-113-40	3	200 mm	220	348	368			
539-114-40	3	250 mm	270	398	418			
539-115-40	3	300 mm	330	458	478			
539-116-40	3	350 mm	380	508	528			
539-117-40	3	400 mm	430	558	578			
539-118-40	3	450 mm	480	608	628			
539-119-40	3	500 mm	540	668	688			
539-121-40	3	600 mm	650	778	798			2,6
539-123-40	3	700 mm	760	888	908			2,8
539-124-40	3	750 mm	810	938	958			2,9
539-125-40	3	800 mm	860	988	1008			3
539-126-40	3	900 mm	960	1088	1108			3,3
539-127-40	5	1000 mm	1060	1188	1208	594		3,7
539-128-40	5	1100 mm	1160	1288	1308	644		4
539-129-40	5	1200 mm	1260	1388	1408	694		4,2
539-130-40	5	1300 mm	1360	1488	1508	744		4,4
539-131-40	5	1400 mm	1460	1588	1608	794		4,6
539-132-40	5	1500 mm	1560	1688	1708	844		4,8
539-133-40	5	1600 mm	1690	1818	1838		610	5,1
539-134-40	5	1700 mm	1790	1918	1938		650	5,3
539-135-40	5	1800 mm	1890	2018	2038		670	5,5
539-136-40	5	2000 mm	2100	2228	2248		740	6

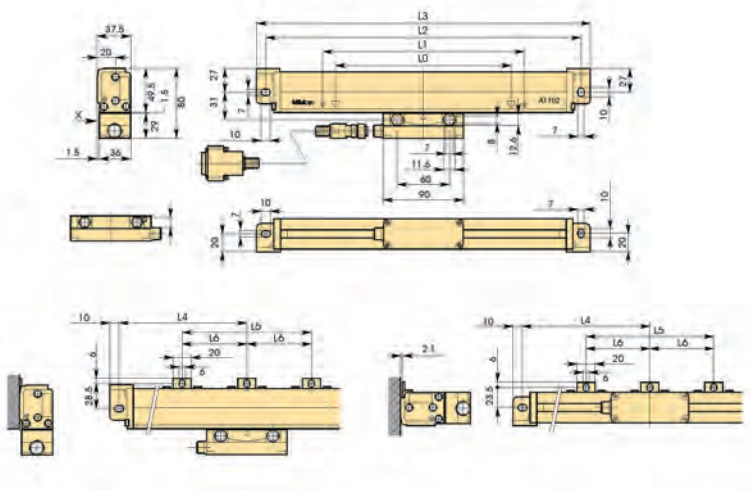

Specifications

Accuracy	(3+3L/1000) µm L = Effective range (mm)
Scale reference points	every 50 mm
Output waveform	Two 90° phase-shifted sinusoidal signals (2Vpp)
Signal period	20 µm
Dust/water protection level	IP53
Operation temperature	0°C to 45°C
Max. drive speed	up to 120 m/min.
Power supply	5V DC ± 10%

Optional accessories

No.	Description
09AAA033A	Extension Cable 2M
09AAA033B	Extension Cable 5M
09AAA033C	Extension Cable 7M
174-147D	Linear Scale Counter KLD-214
174-183D	Linear Scale Counter KA-212
174-185D	Linear Scale Counter KA-213

Extension cable

Legend
L0 Effective range
L1 Travel range
L2-L3 Mount interval
L4 Overall length
L5-L6 Support bracket position

Refer to the DRO System leaflet for more details.

All products to be sold to commercial customers. Product illustrations are without obligation. Product descriptions, in particular any and all technical specifications, are only binding when explicitly agreed upon. For suggested retail prices, please refer to the separate price list.

DRO LINEAR SCALES AT113

Series 539 - sealed incremental - slimline scale housing

These linear scales are built for limited installation space
- Glass scale - Zero not coded
- Expansion factor (8 ± 1)x $10^{-6}/K^{-1}$
- An armoured inox signal cable is used to connect the DRO counter

Specifications

Accuracy	(5+5L/1000) µm L = Effective range (mm)
Output waveform	Two 90° phase-shfted sinusoidal signals (2Vpp)
Max. drive speed	120 m/min
Signal period	20 µm
Scale reference points	every 50 mm
Dust/water protection level	IP53
Operation temperature	0°C to 45°C
Power supply	5V DC ± 10%

Optional accessories

No.	Description
09AAA033A	Extension Cable 2M
09AAA033B	Extension Cable 5M
09AAA033C	Extension Cable 7M
174-147D	Linear Scale Counter KLD-214
174-183D	Linear Scale Counter KA-212
174-185D	Linear Scale Counter KA-213

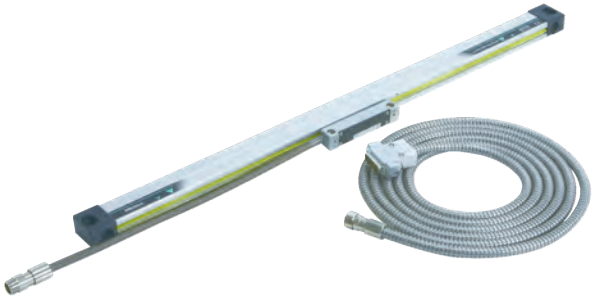

539-201-30

No.	Cable length [m]	Effective range	L1 [mm]	L2 [mm]	L3 [mm]	L4 [mm]	L5 [mm]	L6 [mm]	L7 [mm]	Mass [kg]
539-201-30	3,5	100 mm	120	258	242	276				0,9
539-202-30	3,5	150 mm	170	308	292	326				
539-203-30	3,5	200 mm	220	358	342	376				
539-204-30	3,5	250 mm	270	408	392	426				
539-205-30	3,5	300 mm	330	468	452	486				
539-206-30	3,5	350 mm	380	518	502	536				
539-207-30	3,5	400 mm	430	568	552	586				
539-208-30	3,5	450 mm	480	618	602	636				
539-209-30	3,5	500 mm	540	678	662	696	339	331		
539-211-30	3,5	600 mm	640	778	762	796	389	381		1,3
539-213-30	3,5	700 mm	740	878	862	896	439	431		1,3
539-214-30	3,5	750 mm	780	918	902	936	459	451		1,4
539-215-30	3,5	800 mm	840	978	962	996	489	481		1,4
539-216-30	3,5	900 mm	940	1078	1062	1096	539	531		1,4
539-217-30	5	1000 mm	1040	1178	1162	1196	589	581		1,9
539-218-30	5	1100 mm	1140	1278	1262	1296			430	1,9
539-219-30	5	1200 mm	1240	1378	1362	1396			460	2
539-220-30	5	1300 mm	1340	1478	1462	1496			490	2,2
539-221-30	5	1400 mm	1440	1578	1562	1596			530	2,2
539-222-30	5	1500 mm	1540	1678	1662	1696			560	2,2

Legend
L0 Effective range
L1 Travel range
L2-L3 Mount interval
L4 Overall length
L5-L7 Support bracket position

Refer to the DRO System leaflet for more details.

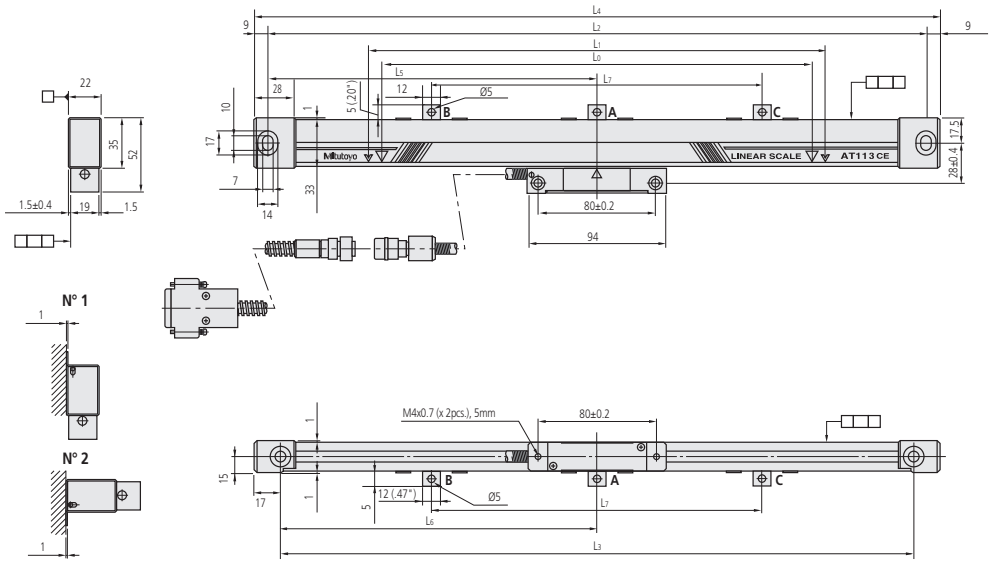

N°1-N°2 Mounting method

All products to be sold to commercial customers. Product illustrations are without obligation. Product descriptions, in particular any and all technical specifications, are only binding when explicitly agreed upon. For suggested retail prices, please refer to the separate price list.

DRO LINEAR SCALES AT113 - High Accuracy

Series 539 - sealed incremental - slimline housing - with very high repeatability

These linear scales are built for limited installation space
- Glass scale - Zero not coded
- Expansion factor (8 ± 1)x $10^{-6}/K^{-1}$
- An armoured inox signal cable is used to connect the DRO counter

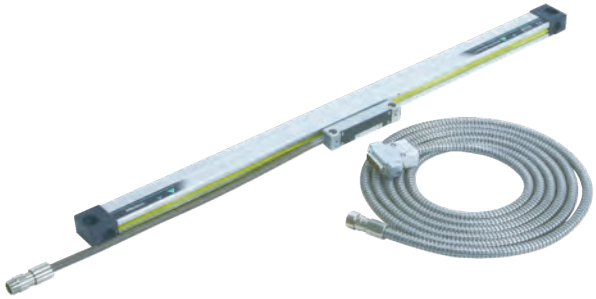

539-201-40

No.	Cable length [m]	Effective range	L^1 [mm]	L^2 [mm]	L^3 [mm]	L^4 [mm]	L^5 [mm]	L^6 [mm]	L^7 [mm]	Mass [kg]
539-201-40	3,5	100 mm	120	258	242	276				0,9
539-202-40	3,5	150 mm	170	308	292	326				
539-203-40	3,5	200 mm	220	358	342	376				
539-204-40	3,5	250 mm	270	408	392	426				
539-205-40	3,5	300 mm	330	468	452	486				
539-206-40	3,5	350mm	380	518	502	536				
539-207-40	3,5	400 mm	430	568	552	586				
539-208-40	3,5	450 mm	480	618	602	636				
539-209-40	3,5	500 mm	540	678	662	696	339	331		
539-211-40	3,5	600 mm	640	778	762	796	389	381		1,3
539-213-40	3,5	700 mm	740	878	862	896	439	431		1,3
539-214-40	3,5	750 mm	780	918	902	936	459	451		1,4
539-215-40	3,5	800 mm	840	978	962	996	489	481		1,4
539-216-40	3,5	900 mm	940	1078	1062	1096	539	531		1,4
539-217-40	5	1000 mm	1040	1178	1162	1196	589	581		1,9
539-218-40	5	1100 mm	1140	1278	1262	1296			430	1,9
539-219-40	5	1200 mm	1240	1378	1362	1396			460	2
539-220-40	5	1300 mm	1340	1478	1462	1496			530	2,2
539-221-40	5	1400 mm	1440	1578	1562	1596			530	2,2
539-222-40	5	1500 mm	1540	1678	1662	1696			560	2,2

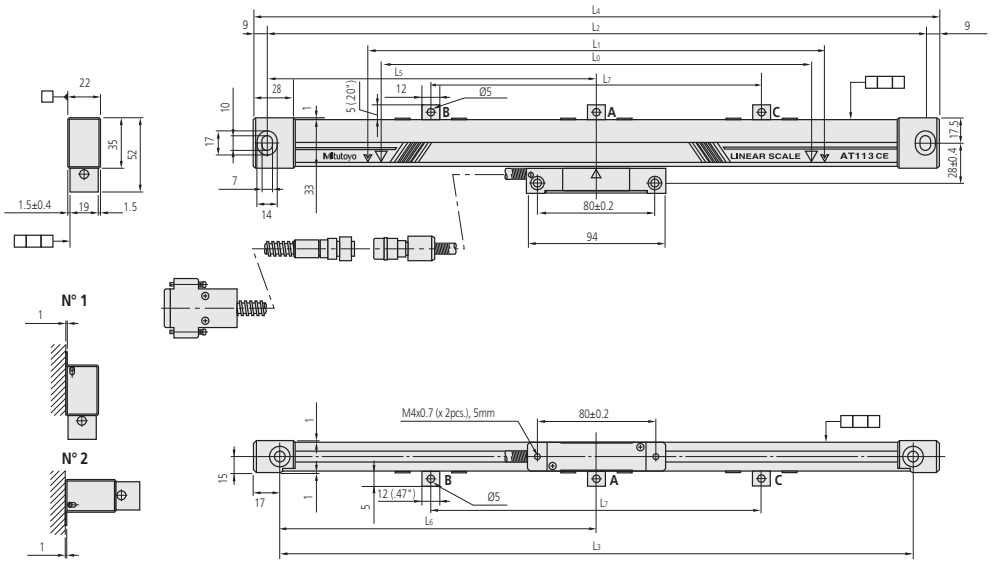

N°1-N°2 Mounting method

Specifications

Accuracy	(3+3L/1000) µm L = Effective range (mm)
Max. drive speed	120 m/min
Signal period	20 µm
Scale reference points	every 50 mm
Dust/water protection level	IP53
Operation temperature	0°C to 45°C
Power supply	5V DC ± 10%

Optional accessories

No.	Description
09AAA033A	Extension Cable 2M
09AAA033B	Extension Cable 5M
09AAA033C	Extension Cable 7M
174-147D	Linear Scale Counter KLD-214
174-183D	Linear Scale Counter KA-212
174-185D	Linear Scale Counter KA-213

Legend
L0 Effective range
L1 Travel range
L2-L3 Mount interval
L4 Overall length
L5-L7 Support bracket position

Refer to the DRO System leaflet for more details.

All products to be sold to commercial customers. Product illustrations are without obligation. Product descriptions, in particular any and all technical specifications, are only binding when explicitly agreed upon. For suggested retail prices, please refer to the separate price list.

DRO LINEAR SCALE AT112 - High Accuracy

Series 539 - sealed incremental - super slim housing - with very high repeatability

IP53

- Extra-slim construction
- Glass scale - Zero not coded
- Expansion factor (8 ± 1)x $10^{-6}/K^{-1}$
- An armoured inox signal cable is used to connect the DRO counter

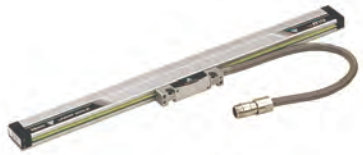

Specifications

Accuracy	(3+3L/1000) µm L = Effective range (mm)
Output waveform	Two 90° phase-shifted sinusoidal signals (2Vpp)
Max. drive speed	up to 72 m/min
Signal period	20 µm
Scale reference points	every 50 mm
Dust/water protection level	IP53
Operation temperature	0°C to 45°C
Power supply	5V DC ± 10%
Delivered	Mounting set

Optional accessories

No.	Description
09AAA033A	Extension Cable 2M
09AAA033B	Extension Cable 5M
09AAA033C	Extension Cable 7M
174-147D	Linear Scale Counter KLD-214
174-183D	Linear Scale Counter KA-212
174-185D	Linear Scale Counter KA-213

Refer to the DRO System leaflet for more details.

High accuracy

No.	Cable length [m]	Effective range	L1 [mm]	L2 [mm]	Mass [kg]
539-251-10	3	50 mm	143	155	0,72
539-252-10	3	70 mm	163	175	0,74
539-253-10	3	120 mm	213	225	0,8
539-254-10	3	170 mm	263	275	0,85
539-255-10	3	220 mm	313	325	0,9
539-256-10	3	270 mm	363	375	0,95
539-257-10	3	320 mm	413	425	1
539-258-10	3	370 mm	463	475	1,05
539-259-10	3	420 mm	513	525	1,1
539-260-10	3	470 mm	563	575	1,15
539-261-10	3	520 mm	613	625	1,2
539-262-10	3	570 mm	663	675	1,25
539-263-10	3	620 mm	713	725	1,3
539-264-10	3	670 mm	763	775	1,35
539-265-10	3	720 mm	813	825	1,4
539-266-10	3	770 mm	863	875	1,45
539-267-10	3	820 mm	913	925	1,5
539-268-10	3	920 mm	1013	1025	1,56
539-269-10	3	1020 mm	1113	1125	1,62

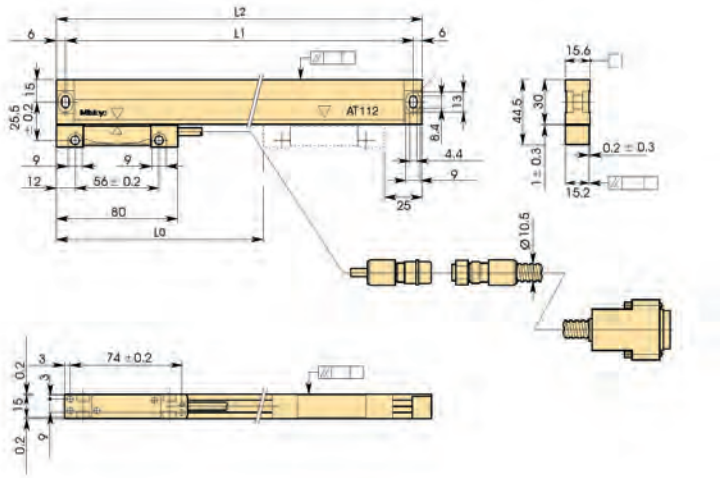

Legend
L0 Effective range
L1 Mount interval
L2 Overall length

All products to be sold to commercial customers. Product illustrations are without obligation. Product descriptions, in particular any and all technical specifications, are only binding when explicitly agreed upon. For suggested retail prices, please refer to the separate price list.

Mitutoyo

DRO LINEAR SCALES AT181 Plunger Type

Series 539 - Incremental Sealed Plunger type

- Specific type for bending presses and grinding machines
- Expansion factor 8 x $10^{-6}/K^{-1}$

Standard accuracy

No.	Cable length [m]	Effective range	L^1 [mm]	L^2 [mm]	L^3 [mm]	Mass [kg]
539-302	3	150 mm	180	305	320	1,9
539-303	3	200 mm	230	355	370	2,1
539-304	3	250 mm	280	405	420	2,3
539-305	3	300 mm	330	455	470	2,5
539-306	3	350 mm	380	505	520	2,7
539-307	3	400 mm	430	555	570	2,9
539-308	3	450 mm	480	605	620	3,1
539-309	3	500 mm	530	655	670	3,3
539-310	3	550 mm	580	705	720	3,5
539-311	3	600 mm	630	755	770	3,7

Specifications

Accuracy	Standard type (5+5L/1000) µm High-accuracy type (3+3L/1000) µm L = Effective range (mm)
Output waveform	Two 90° phase-shifted sinusoidal signals (2Vpp)
Max. drive speed	up to 50 m/min
Signal period	20 µm
Scale reference points	every 50 mm
Dust/water protection level	IP54
Operation temperature	0°C to 45°C
Power supply	5V DC ± 10%

Optional accessories

No.	Description
09AAA033A	Extension Cable 2M
09AAA033B	Extension Cable 5M
09AAA033C	Extension Cable 7M
174-147D	Linear Scale Counter KLD-214
174-183D	Linear Scale Counter KA-212
174-185D	Linear Scale Counter KA-213

Refer to the DRO System leaflet for more details.

All products to be sold to commercial customers. Product illustrations are without obligation. Product descriptions, in particular any and all technical specifications, are only binding when explicitly agreed upon. For suggested retail prices, please refer to the separate price list.

DRO LINEAR SCALES AT116

Series 539 - sealed incremental - slimline housing - price aggressive

IP53

- Suitable for milling machines, XY tables, jigs, etc.
- Glass scale - Zero not coded
- Expansion factor (8 ± 1)x $10^{-6}/K^{-1}$
- An armoured inox signal cable is used to connect the DRO counter

Specifications

Accuracy	(5+5L/1000) µm L = Effective range (mm)
Output waveform	Two 90° phase-shifted sinusoidal signals (2Vpp)
Max. drive speed	up to 50 m/min
Signal period	20 µm
Scale reference points	every 50 mm
Dust/water protection level	IP53
Operation temperature	0°C to 45°C
Power supply	5V DC ± 10%

Optional accessories

No.	Description
09AAA720A	2M Cable for AT115, Conduit Armed
09AAA720B	5M Cable for AT115, Conduit Armed
09AAA720C	Cable, for Linear Scale 7m
174-147D	Linear Scale Counter KLD-214
174-183D	Linear Scale Counter KA-212
174-185D	Linear Scale Counter KA-213

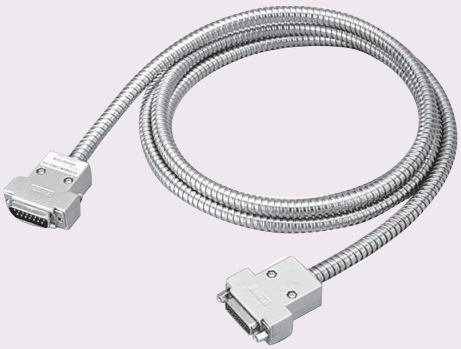

Extension cable

539-271-30

No.	Cable length [m]	Effective range	L1 [mm]	L2 [mm]	L3 [mm]	L4 [mm]	L5 [mm]	L6 [mm]	L7 [mm]	Mass [g]
539-271-30	3,5	100 mm	120	258	242	276				550
539-272-30	3,5	150 mm	170	308	292		326			600
539-273-30	3,5	200 mm	220	358	342	376				700
539-274-30	3,5	250 mm	270	408	392	426				800
539-275-30	3,5	300 mm	330	468	452	486				900
539-276-30	3,5	350 mm	380	518	502	536				1000
539-277-30	3,5	400 mm	430	568	552	586				1050
539-278-30	3,5	450 mm	480	618	602	636				1150
539-279-30	3,5	500 mm	540	678	662	696	339	331		1250
539-281-30	3,5	600 mm	640	778	762	796	389	381		1450
539-283-30	3,5	700 mm	740	878	862	896	439	431		1600
539-284-30	3,5	750 mm	780	918	902	936	459	451		1700
539-285-30	3,5	800 mm	840	978	962	996	489	481		1800
539-286-30	3,5	900 mm	940	1078	1062	1096	539	531		1950
539-287-30	5	1000 mm	1040	1178	1162	1196	589	581		2350
539-288-30	5	1100 mm	1140	1278	1262	1296			430	2500
539-289-30	5	1200 mm	1240	1378	1362	1396			460	2700
539-290-30	5	1300 mm	1340	1478	1462	1496			490	2850
539-291-30	5	1400 mm	1440	1578	1562	1596			530	3050
539-292-30	5	1500 mm	1540	1678	1662	1696			560	3250

Legend
L0 Effective range
L1 Travel range
L2-L3 Mount interval
L4 Overall length
L5-L7 Support bracket position

Refer to the DRO System leaflet for more details.

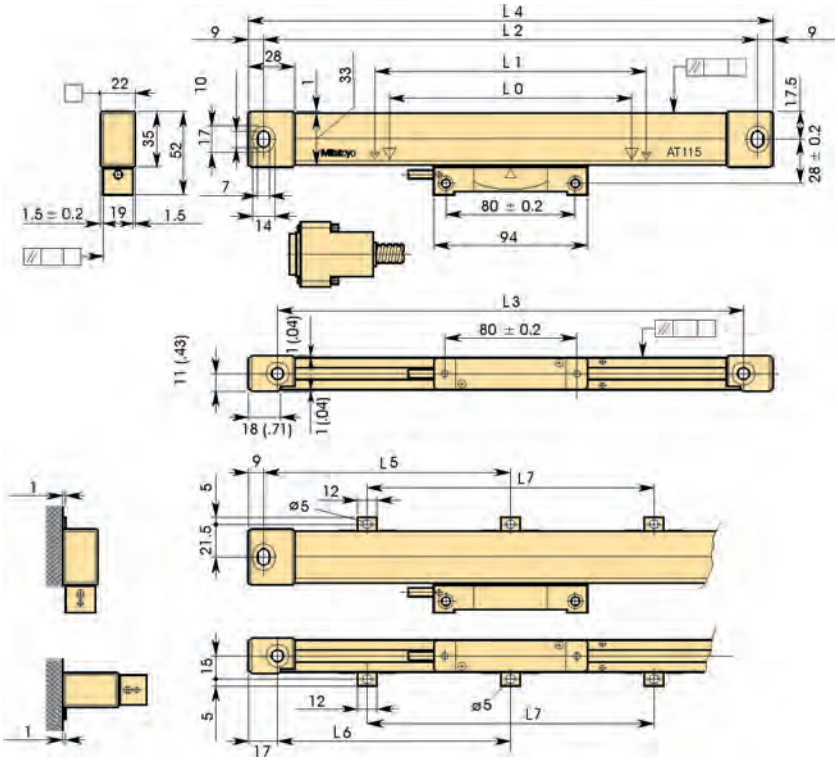

DRO ABS LINEAR SCALES AT715

Series 539 - sealed Absolute - IP 67 protection - medium scale housing - specific for new and old manual machine

This linear scale is based on electro magnetic induction principle thus offering you high enviroment protection IP level , in the mean time reference point is not necessary after each power on.

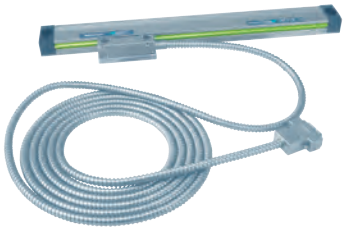

No.	Cable length [m]	Effective range	L^1 [mm]	L^2 [mm]	L^3 [mm]	L^4 [mm]	L^5 [mm]	L^6 [mm]	L^7 [mm]	L^8 [mm]
539-801	3,5	100 mm	120	258	242	278				
539-802	3,5	150 mm	170	308	292	328				
539-803	3,5	200 mm	220	358	342	378				
539-804	3,5	250 mm	270	408	392	428				
539-805	3,5	300 mm	330	468	452	488				
539-806	3,5	350 mm	380	518	502	538				
539-807	3,5	400 mm	430	568	552	588				
539-808	3,5	450 mm	480	618	602	638				
539-809	3,5	500 mm	540	678	662	698	339	331		
539-811	3,5	600 mm	640	778	762	798	389	381		
539-813	3,5	700 mm	740	878	862	898	439	431		
539-814	3,5	750 mm	780	918	902	938	459	451		
539-815	3,5	800 mm	840	978	962	998	489	481		
539-816	3,5	900 mm	940	1078	1062	1098	539	531		
539-817	5	1000 mm	1040	1178	1162	1198	589	581		
539-818	5	1100 mm	1140	1278	1262	1298	424	416	430	
539-819	5	1200 mm	1240	1378	1362	1398	459	451	460	
539-820	5	1300 mm	1340	1478	1462	1498	494	486	490	
539-821	5	1400 mm	1440	1578	1562	1598	524	516	530	
539-822	5	1500 mm	1540	1678	1662	1698	559	551	560	
539-823	5	1600 mm	1640	1778	1762	1798	459	451	430	215
539-824	5	1700 mm	1740	1878	1862	1898	479	471	460	230
539-825	5	1800 mm	1840	1978	1962	1998	459	451	530	280
539-860	5	2000 mm	2040	2178	2162	2198	539	531	550	
539-861	5	2200 mm	2240	2378	2362	2398	469	461	480	
539-862	7	2400 mm	2440	2578	2562	2598	509	501	520	
539-863	7	2500 mm	2540	2678	2662	2698	529	521	540	
539-864	7	2600 mm	2640	2778	2762	2798	549	541	560	
539-865	7	2800 mm	2840	2978	2962	2998	489	481	500	
539-866	7	3000 mm	3040	3178	3162	3198	529	521	530	

Extended cable 2 m is attached to 2400-3000 mm of effective length at signal cable 5 m, and it is 7 m in total!

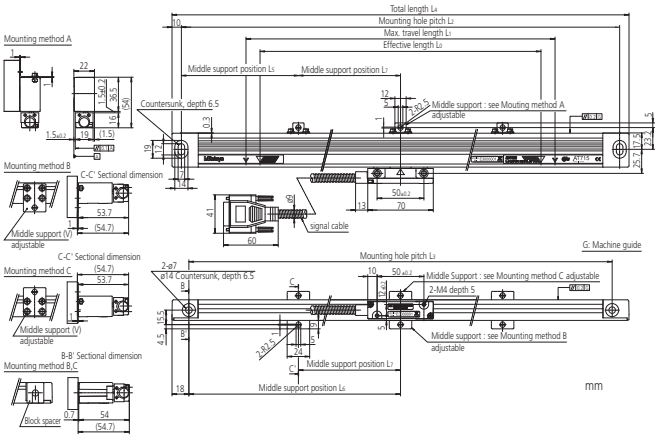

Specifications

Accuracy	100 to 500 mm ±5 µm 600 to 1800 mm ±7 µm 2000 to 3000 mm ±10 µm
Max. drive speed	50 m/min
Signal period	20 µm
Measuring method	Electromagnetic induction system
Operation temperature	0-45 °C
Power supply	5V DC ± 10%

Optional accessories

No.	Description
09AAB674A	Extension Cable 2m, for AT715
09AAB674B	Extension Cable 5m, for AT715
09AAB674C	Extension Cable 7m, for AT715
174-147D	Linear Scale Counter KLD-214
174-183D	Linear Scale Counter KA-212
174-185D	Linear Scale Counter KA-213

Legend
L0 Effective range
L1 Travel range
L2-L4 Mounting hole pitch
L5-L8 Middle support positions

Refer to the DRO System leaflet for more details.

All products to be sold to commercial customers. Product illustrations are without obligation. Product descriptions, in particular any and all technical specifications, are only binding when explicitly agreed upon. For suggested retail prices, please refer to the separate price list.

Universal DRO KA-200 Counter

Functions	Series 174 - DRO counter for Linear Scales
ZERO SET	●
PRESET	●
Diameter display	●
1/2 calculation	●
mm/inch conversion	●
Bolt-hole circle machining	●
Scale reference points	●
Linearity error compensation	●
Zero approach function (Incremental mode)	●
Addition of 2-scale data	●
Coordinate system switching	●
Error message	●
Lower digit blanking out	●
Measurement direction setting	●
Memory backup	●
Pitch machinig	●
Resolution setting	●
Smoothing	●

Specifications

Display	7-segment, 8-digit + sign + 8-character alphabet LED display
Dimensions (WxDxH)	300 x 70 x 167 mm mm
Resolution	With AT100 Series: 0,05 - 0,0001 mm With AT715: 0,01 - 0,001 mm
Operation temperature	0°C to 45°C
Power supply	100-240V-AC 50/60 Hz
Macro functions	Rectangular drilling and round milling newly added
Main features	Feed speed display; taper machining function; tool data; multipoint compensation; scale check function; calculation function
Output (optional)	RS-232C / USB

Optional accessories

No.	Description
06AET993	RS 232 C code out unit
06ACF941	Load/Zero Cable f. KA
937179T	Footswitch for SPC

*with Linear Scale AT1xx only

Series 174 - DRO counter for Linear Scales

This counter displays length indication transmitted from a linear scale.
The KA-Counter offers you the following benefits:

- Can be used as a "standard counter" or a "lathe counter" by modifying parameters.
- Downsizing, weight saving and multiple function have been realized.
- Sub display for easy operation.
- Text data can be output using the optional USB interface.
- The optional external interface RS-232C enables connection to a PC and a printer.

174-185D

No.	Axes	Mass
174-183D	2	1,25 kg
174-185D	3	1,33 kg

All products to be sold to commercial customers. Product illustrations are without obligation. Product descriptions, in particular any and all technical specifications, are only binding when explicitly agreed upon. For suggested retail prices, please refer to the separate price list.

DRO KLD200 Counter

Series 174

The KLD200 Counter is a single axis linear scale display unit with limit signal output.
The KLD200 offers you the following benefits:

- The counter is designed to signal when a linear scale displacement value and a preset limit value coincide.
- You have a choice of two types of limit settings (2 step and 4 step).
- Ideal for controlling vertical positioning on an EDM or a grinding machine.
- You can connect it to a computer or a sequencer via an RS-232C Interface or limit signal output (offered as standard).
- You can connect the following linear scales to the counter: AT103/AT112/AT113/AT116/AT181/AT715.

174-147

No.	Mass [kg]	Description
174-147D		4-step limit signal output
174-146D	3	2-step limit signal output

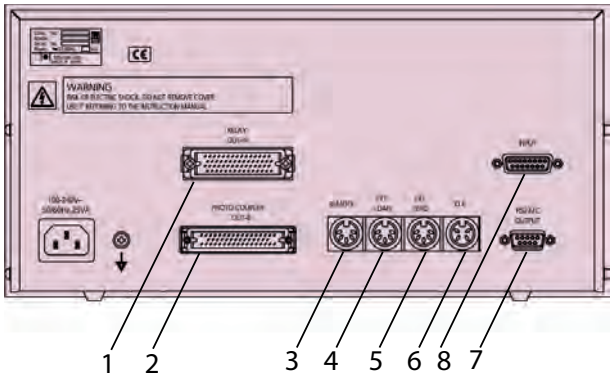

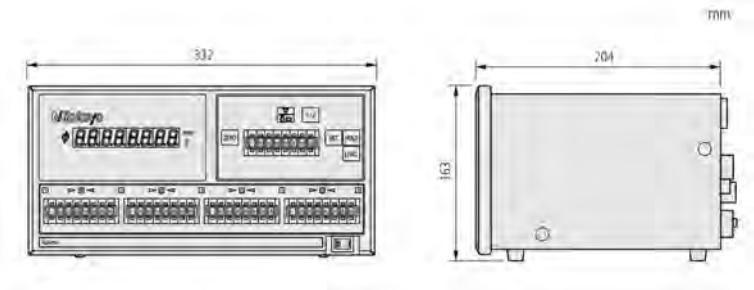

Specifications

Digital step	0,001 mm (Indication range: -9999,999 mm to +99999,999 mm) 0,005 mm (Indication range: -9999,995 mm to +99999,995 mm)
Scale input ports	1
Power supply	100-120V/200-240V AC 50/60 Hz
Display	9-Digit LED and a negative (-) sign

Optional accessories

No.	Description
965004	RS 232 C Extern Load Switch
937326	External load box 1 axis
936551	External "Null Box" 1 axis
938140	Touch Signal Probe
935094	Touch signal probe ø 32 *

*with Linear Scale AT1xx only

1. Relay signal output
2. Photocoupler signal output
3. Remote signal input
4. External load signal input
5. External zero-set signal input
6. Touch signal input
7. RS-232C interface
8. Input Linear Scale Signal

All products to be sold to commercial customers. Product illustrations are without obligation. Product descriptions, in particular any and all technical specifications, are only binding when explicitly agreed upon. For suggested retail prices, please refer to the separate price list.

DRO Extension cables selection guide

Series 0944

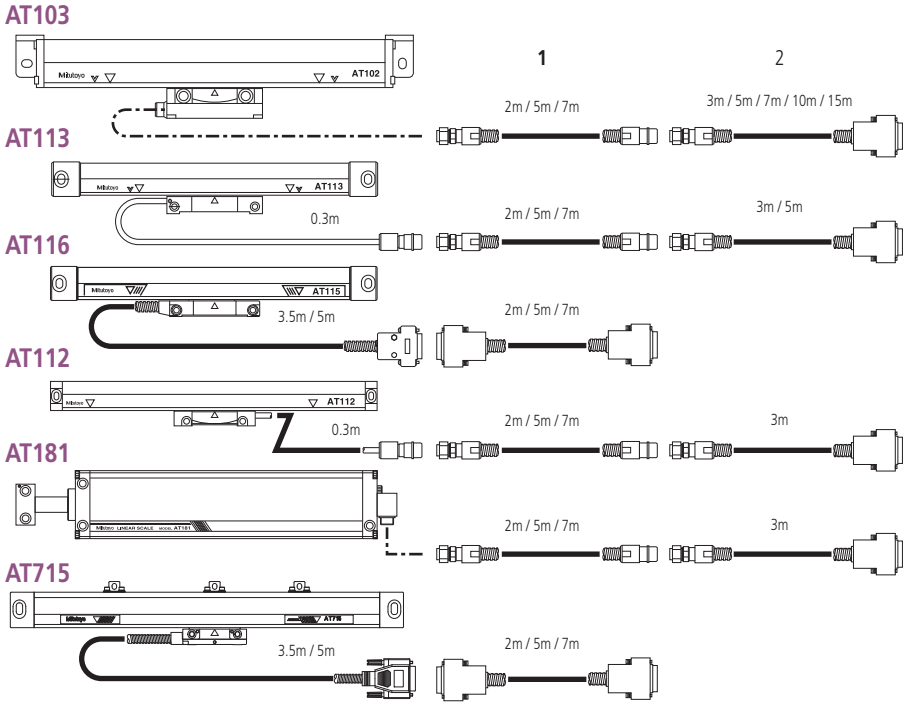

Extension cable selection guide

KA Counter

KLD Counter

All products to be sold to commercial customers. Product illustrations are without obligation. Product descriptions, in particular any and all technical specifications, are only binding when explicitly agreed upon. For suggested retail prices, please refer to the separate price list.

Overview of CNC Linear Scale System

	Scale Name (code)	Reference point	ABSOLUTE function	Main scale grating pitch	Signal output pitch	Signal unit	No. of Division	Resolution	Maximum response speed	Minimum edge interval
Separate Type Linear Scales	**ST36B ST36C (ST36A) (ST36D)**	○	×	8μm	4μm	– (PSU-200)	400	0.01μm	70mm/s	125ns
							200	0.02μm	150mm/s	
							80	0.05μm	260mm/s	
							40	0.1μm	720mm/s	
	ST24B ST24C	○	×	20μm	10μm	–	200	0.05μm	360mm/s	125ns
							100	0.1μm	720mm/s	
							20	0.5μm	1200mm/s	250ns
							10	1μm	1200mm/s	500ns
	ST46-EZA	○	×	20μm	20μm	–	400	0.05μm	900mm/s	50ns
							200	0.1μm	1800mm/s	
							40	0.5μm	2600mm/s	
							20	1μm	2600mm/s	
	ST422	○	×	40μm	40μm	–	200	0.2μm	1500mm/s	125ns
							80	0.5μm	3600mm/s	
							40	1μm	5000mm/s	
							8	5μm	5000mm/s	250ns
	ABS ST700 Compact type	–	○	3.072mm	3.072mm	–	30720	0.1μm	5000mm/s	–
Assembly Type Linear Scales	**AT402E**	○	△	20μm	20μm	–	–	–	2000mm/s	1Vp-p differential sine wave
	AT211	○	×	20μm	20μm	–	200	0.1μm	710mm/s	125ns
							100	0.2μm	1400mm/s	
							40	0.5μm	2000mm/s	
							20	1μm		250ns
							8	2.5μm		500ns
							4	5μm		1000ns
	AT203	○	×	20μm	20μm	–	200	0.1μm	333mm/s	250ns
							40	0.5μm	1833mm/s	
							20	1μm	2000mm/s	
	ABS AT500	–	○	20μm	20μm	–	4096	0.005μm	2500mm/s*1	–
							400	0.05μm		
	ABS AT300	–	○	20μm	20μm	–	400	0.05μm	2000mm/s	–

*1 Maximum response speed of H type with 0.005μm resolution is 1200mm/s.

All products to be sold to commercial customers. Product illustrations are without obligation. Product descriptions, in particular any and all technical specifications, are only binding when explicitly agreed upon. For suggested retail prices, please refer to the separate price list.

CNC LINEAR SCALES AT402E

Series 539 - sealed incremental - zero coded-standard size housing - high traverse speed

Universal & High vibration (20G) and shock (40G) - resistant type.
- 20 µm grating pitch
- output signal 1Vpp
- zero coded every 20 µm
- suggested resolution 1 - 0,5 µm

Specifications

Accuracy	140 to 540 mm ±2 µm 640 to 3040 mm ± 3 µm
Max. drive speed	over 120 m/min
Signal period	20 µm
Output waveform	Two 90° phase-shifted sinusoidal signals (1 Vpp) Differential (RS-485)
Operation temperature	0°C to 45°C
Power supply	5V DC ± 10%

Optional accessories

No.	Description
09AAC071A	Signal-Cable A, 1m/AT402E
09AAC071B	Signal-Cable A, 3m/AT402E
09AAC071C	Signal-Cable A, 6m/AT402E
09AAC071D	Signal-Cable A, 9m/AT402E
09AAC079A	Signal-Cable B, 1m/AT402E
09AAC079B	Signal-Cable B, 3m/AT402E
09AAC079C	Signal-Cable B, 6m/AT402E
09AAC079D	Signal-Cable B, 9m/AT402E
09AAC073A	Signal-Cable C, 1m/AT402E
09AAC073B	Signal-Cable C, 3m/AT402E
09AAC073C	Signal-Cable C, 6m/AT402E
09AAC073D	Signal-Cable C, 9m/AT402E

Without cable (-00)

No.	Effective range	L^1 [mm]	L^2 [mm]	L^3 [mm]
539-371-00	140 mm	259	135	150
539-373-00	240 mm	359	185	250
539-374-00	340 mm	459	235	350
539-375-00	440 mm	559	285	450
539-376-00	540 mm	659	335	550
539-377-00	640 mm	759	385	650
539-378-00	740 mm	859	435	750
539-379-00	840 mm	959	485	850
539-380-00	940 mm	1059	535	950
539-381-00	1040 mm	1159	585	1050
539-382-00	1140 mm	1259	635	1150
539-383-00	1240 mm	1359	685	1250
539-384-00	1340 mm	1459	735	1350
539-385-00	1440 mm	1559	785	1450
539-386-00	1540 mm	1659	835	1550
539-387-00	1640 mm	1759	885	1650
539-388-00	1740 mm	1859	935	1750
539-389-00	1840 mm	1959	985	1850
539-390-00	2040 mm	2159	1085	2050
539-391-00	2240 mm	2359	1185	2250
539-392-00	2440 mm	2559	1285	2450
539-393-00	2640 mm	2759	1385	2650
539-394-00	2840 mm	2959	1485	2850
539-395-00	3040 mm	3159	1585	3050

mm

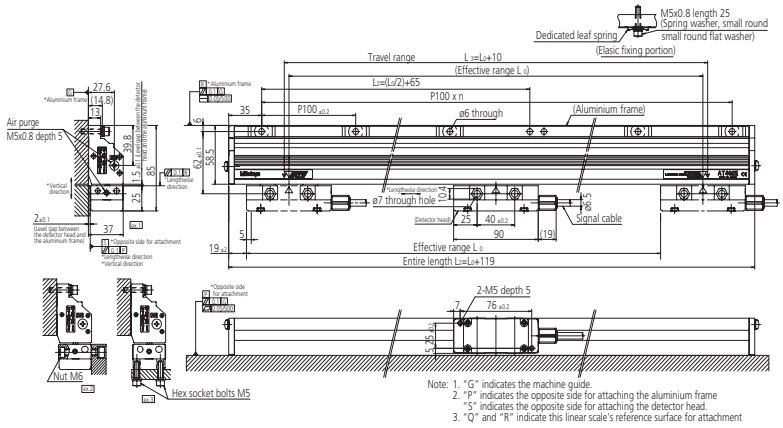

All products to be sold to commercial customers. Product illustrations are without obligation. Product descriptions, in particular any and all technical specifications, are only binding when explicitly agreed upon. For suggested retail prices, please refer to the separate price list.

CNC LINEAR SCALES AT203

Series 539 - sealed incremental -full size housing - high traverse speed-larger measuring lenght

- Accuracy : from 100 up to 1500 mm =± 3 µm
- from 1600 up to 3040 mm= ± 5 µm
- from 3250 up to 6000 mm= +-10 um
- Protection from IP 53 up to IP 64 (pressure device connection)

No.
AT 203

Specifications

Accuracy	100 to 1500 mm (3+3L/1000) µm 1600 to 3000 mm (5+5L/1000) µm 3250 to 6000 mm (5+8L/1000) µm L = Effective range (mm)
Max. drive speed	up to 120 m/min
Scale reference points	every 50 mm
Cable length	5 m
Output waveform	Two 90° phase-shifted quadrature signals (RS422) Differential line driver
Resolution	0,1; 0,5; 1
Power supply	5V DC ± 10%

CNC LINEAR SCALES AT211

Series 539 - Sealed incremental - slimline size housing - high traverse speed-with very high repeteability

- 20 µm grating pitch-output signal square wave (RS 422)
- suggested resolution 1 - 0,5 µm
- high traverse speed
- Accuracy - standard version: from 100 up to 1500 mm =± 3 µm
- Accuracy - high repeteability from 100 up to 1500 = ± 2 µm
- Protection from IP 53 up to IP 64 (pressure device connection)

AT211A

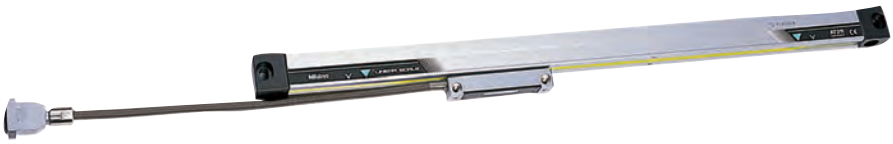

AT211B

Specifications

Accuracy	100 to 1500 mm (3+3L/1000) µm (standard type) (2+2L/1000) µm (high-accuracy type) 500 to 1500 mm (3+3L/1000) µm L = Effective range (mm)
Max. drive speed	up to 120 m/min
Signal period	20 µm
Resolution	0,1; 0,5; 1 µm
Output waveform	Two 90° phase-shifted quadrature signals (RS422) Differential line driver
Power supply	5V DC ± 10%

All products to be sold to commercial customers. Product illustrations are without obligation. Product descriptions, in particular any and all technical specifications, are only binding when explicitly agreed upon. For suggested retail prices, please refer to the separate price list.

CNC ABS LINEAR SCALES AT300

Specifications

Accuracy	100 to 1500 mm (3+3L/1000) µm 1600 to 3000 mm (5+5L/1000) µm L = Effective range (mm)
Max. drive speed	up to 120 m/min
Resolution	0,05 µm
Signal period	20 µm
Power supply	5V DC ± 10%

Refer to the NC Linear Scale brochure for more details

Series 539 - Sealed Absolute type - Standard dimension

ABSOLUTE® IP53

This sealed-type, ABSOLUTE linear scale gives you very fine resolution up to 0,05µm. The AT300 offers you the following benefits:

- You can connect it directly with NC machine tools.
- ABS AT303: Supports Mitutoyo standard serial interface.
- ABS AT343: Supports Mitsubishi® Electric high-speed serial interface.
- ABS AT353: Supports Fanuc® high-speed serial interface.
- Installation dimensions are available from Mitutoyo – please contact.

AT300

CNC ABS LINEAR SCALES AT500

Specifications

Accuracy	S model (3+3L/1000) µm H model (2+2L/1000) µm E model (2+2L/1000) µm L = Effective range (mm)
Max. drive speed	S model 150 m/min. H model 72 m/min E model 72/150 m/min 0,05/0,005 µm
Resolution	AT5_5 model: 0,005 µm AT5_3 model: 0,05 µm AT5_ _E model : 0,05 /0,005µm
Signal period	20 µm
Power supply	5V DC ± 10%

Refer to the NC Linear Scale brochure for more details

Series 539 - Sealed Absolute type - Slim line

ABSOLUTE® IP53

This sealed-type, ABSOLUTE linear scale gives you very fine resolution up to 0,05µm. The AT500 offers you the following benefits:

- You can connect it directly with NC machine tools.
- ABS AT505/AT503: Supports Mitutoyo standard serial interface.
- ABS AT545/AT543: Supports Mitsibishi® Electric high-speed serial interface.
- ABS AT555/AT553: Supports Fanuc® high-speed serial interface.
- You have a choice of two types:
  -SC model: high-rigidity type
  -HC model: high-accuracy type.
- Installation dimensions are available from Mitutoyo – please contact.

AT553-HC

AT553-SC

No.
AT500

All products to be sold to commercial customers. Product illustrations are without obligation. Product descriptions, in particular any and all technical specifications, are only binding when explicitly agreed upon. For suggested retail prices, please refer to the separate price list.

CNC ABS LINEAR SCALES AT1100

Series 579 - Electromagnetic induction Absolute Scale

ABSOLUTE®

This scale unit leverages Mitutoyo's unique electromagnetic induction technology to provide excellent resistance to oil and water compared with the optical linear encoder type, elevating the ABS AT1100 to the level of a highly reliable NC machine-tool scale suitable for tough shop floor conditions.

– Additional factors in providing the high performance of the ABS AT1100 are the innovative shaping and location of the detector track in the aluminum frame and the extreme coolant resistance of the track-seal material. Together these combine in a highly effective first defence against contamination of the scale and sensor even in extremely severe installation environments.

No.
ABS AT1100

Specifications

Detection Method	Electromagnetic induction
Resolution	0,05 µm
Maximum effective range	3040 mm
Cross section	85 x 37 mm
Accuracy	3+5L/1000) µm L= 140 to 2040 mm (5+5L/1000) µm L= 2240 to 3040 mm
Response speed	3 m/s
Compatible interface	FANUC Corporation's Serial Interface Mitsubishi Electric Corporation's High-speed Serial Interface

CNC LINEAR SCALES ST24

Series 579 - Open scales with Sine & Square-Wave Output

This standard-type linear scale gives you a maximum response speed of up to 1200mm/s
The AT500 offers you the following benefits:
– It Includes an LED alarm enabling you to detect overspeed and sinusoidal signal anomalies.
– Installation dimensions are available from Mitutoyo – please contact.

ST24

Specifications

Accuracy	10 - 300 mm ±1 µm 350 - 500 mm ±2 µm 600 - 1000 mm ±3 µm 1100 - 3000 mm ±3 µm/m
Max. drive speed	Up to 1200 mm/sec
Scale reference points	10 - 80 mm Scale center point 100 - 3000 mm every 50 mm
Resolution	0,05; 0,1; 0,5; 1 µm
Output waveform	Two 90° phase-shifted sinusoidal signals (2Vpp) Two 90° phase-shifted square-wave signals (RS422) Line driver
Signal period	10 µm
Power supply	5V DC ± 10%

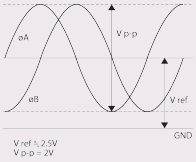

Model C

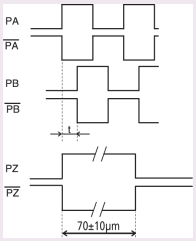

Model B/C

All products to be sold to commercial customers. Product illustrations are without obligation. Product descriptions, in particular any and all technical specifications, are only binding when explicitly agreed upon. For suggested retail prices, please refer to the separate price list.

CNC LINEAR SCALES ST36

Series 579 - Open scales with Sine & Square-Wave Output

This is a high resolution, high accuracy, portable model designed for exposed installations.
The ST36 offers you the following benefits:
- High reliability with stable signal output.
- Outputs two-phase sinusoidal signal (signal pitch 4µm) and two-phase square-wave signal simultaneously.
- Outputs two-phase sinusoidal signal (signal pitch 4µm) and two-phase square-wave signal simultaneously.
- You are provided with a compact interface box as standard.
  Installation dimensions are available from Mitutoyo – please contact.

ST36

Specifications

Accuracy	10 - 300 mm ±0,5 µm 350 - 500 mm ±1 µm 600 - 1000 mm ±2 µm 1100 - 3000 mm ±2 µm/m
Max. drive speed	1200 mm/sec
Signal period	8 µm
Scale reference points	10 -75 mm Center point scale 100 - 3000 mm every 50 mm
Signal period	4 µm
Resolution	0,01; 0,02; 0,05; 0,1 µm
Output waveform	Two 90° phase-shifted sinusoidal signals 2Vpp (Model A and C) Two 90° phase-shifted square-wave signals (Model B and C) RS422 Line Driver
Power supply	5V DC ± 10%

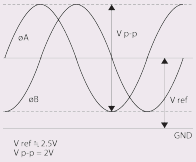

Model A/C

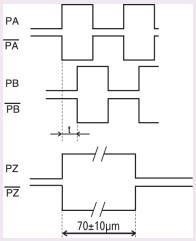

Model B/C

CNC LINEAR SCALES ST422

Series 579 - Open scales with Sine & Square Wave Output

This compact-type, exposed-type incremental linear scale gives you a maximum response speed of 5000 mm/sec.
The ST422 offers you the following benefits:
- It is provided with alarm LED error indication with fault detection signal output for overspeed and sinusoidal signal anomalies.
- Installation dimensions are available from Mitutoyo – please contact.

ST422

Specifications

Accuracy	10 - 300 mm ±1 µm 350 - 500 mm ±2 µm 600 - 1000 mm ±3 µm 1100 - 3000 mm ±3 µm
Max. drive speed	up to 5000 mm/sec
Scale reference points	10 - 75 mm Center point scale 100 - 3000 mm every 50 mm
Signal period	40 µm
Resolution	0,2; 0,5; 1; 5 µm
Output waveform	Two 90° phase-shifted sinusoidal signals (2Vpp) Two 90° phase-shifted square-wave signals (RS422) Line driver
Power supply	5V DC ± 10%

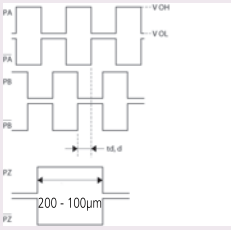

Two 90° phase-shifted square waves signals

Refer to the NC Linear Scale brochure for more details

All products to be sold to commercial customers. Product illustrations are without obligation. Product descriptions, in particular any and all technical specifications, are only binding when explicitly agreed upon. For suggested retail prices, please refer to the separate price list.

CNC Linear Scale ST46-EZA

Series 579 - Fotoelectric metal tape linear scales

- Grating pitch 20 µm
- Zero reference not coded
- Output signal sinusoidal 2Vpp or square wave signal(RS 422) sticky or double sided tape version
- LED display function anomalie

No.	Detection Method
ST46EZA Type B	Reflective photoelectric linear encoder
ST46EZA Type C	Reflective photoelectric linear encoder

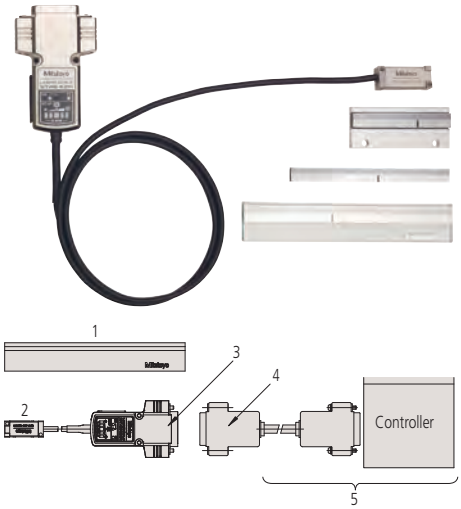

1: Main scale; 2: Detector unit; 3: Output connector (included); 4: Feedback cable; 5: To be supplied by customer (feedback cable/controller)

Specifications

Effective range	10 to 3000 mm
Maximum response speed	2,6 m/s (at sine wave amplitude -3dB)
Internal expansion coefficient	(8±1) x 10-6°C
Output signal	Type B: 2-phase square wave signals, reference point pulse, external reset input Type C: 2-phase square wave signals, reference point pulse, 2 phase sinusoidal signal
Scale reference point	With scale reference point (50 mm pitch, 10 to 80 mm: Center point)
Storage temperature/ humidity	-20 to 60°C, 20 to 80% RH (no condensation)
Operating temperature/ humidity	0 to 40°C, 20 to 80% RH (no condensation)
Power supply voltage	5VDC ± 5%
Scale specifications	Grating pitch 20 µm, Material: metal tape (Glas on request)

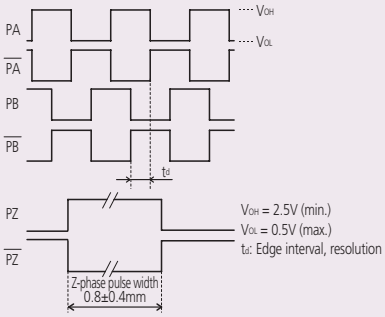

Output Signal Type B

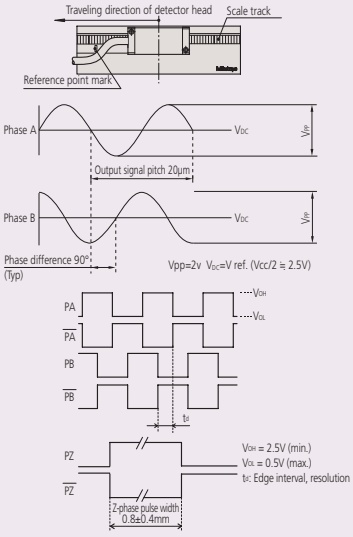

Output Signal Type C

Brochure on request

All products to be sold to commercial customers. Product illustrations are without obligation. Product descriptions, in particular any and all technical specifications, are only binding when explicitly agreed upon. For suggested retail prices, please refer to the separate price list.

CNC LINEAR SCALES ST700

Refer to the Linear Scale ST700 brochure for more details

Series 579 - Electromagnetic induction Absolute Scale

ABSOLUTE IP65

ABSOLUTE scales have eliminated the need to re-establish the origin.
The ST700 offers you the following benefits:

- It is optimized for the control of linear motors.
- Optimized for high-speed, high-acceleration control.
- A non-contact detection system ensures a long service life for your product.
- Signal adjustment at installation is automatically performed with dedicated software.

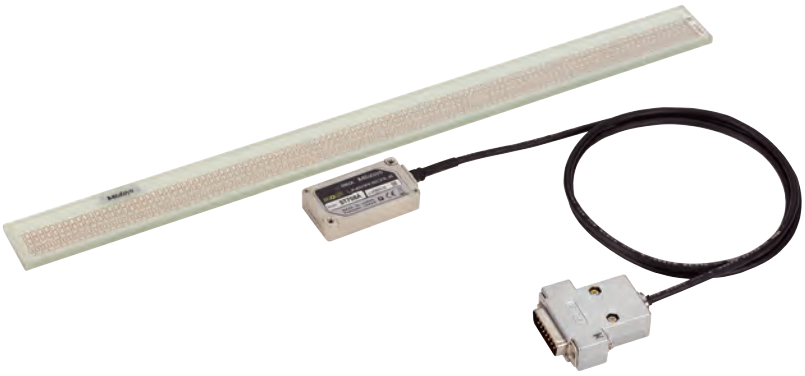

Applicable system	Resolution 0,1 µm 50 mm head No.
[Amplifiers supporting Mitutoyo ENSIS interface] Nikki Denso Co., Ltd. VC Series Servoland Corporation SVF Series PMAC JAPAN Co., Ltd. controller	**ABS ST708A** **ABS ST708AL**
FANUC® Ltd. FS-I Series control unit, Power Mate® i	**ABS ST758** **ABS ST758L**
Mitsubishi® Electric Corporation MELDAS® Series Supported amplifier : MDS-Vn-V1/V2	**ABS ST748** **ABS ST748L**
Mitsubishi® Electric Corporation MR-J2S/MR-J3 Series	**ABS ST748A** **ABS ST748AL**
Panasonic Matsushita® Electric Industrial Co, Ltd., Motor Company MINAS® A4, A4P, A4N Series	**ABS ST778A** **ABS ST778L**
Yaskawa® Electric Corporation ∑-III Series	**ABS ST788A** **ABS ST788L**

Item / Scale Type		Scale base type	Glass scale type
Resolution		0.1µm (0.05µm: special order)	
Detection method		Electromagnetic induction Absolute position detection method	
Shape		Separate type scale	
Effective range (accuracy guarantee range)		100 to 3000mm / 3200 to 6000mm	100 to 1100mm
Accuracy (20°C)		(5+5L/1000) µm L: Effective range mm	(3+3L/1000) µm L: Effective range mm
Maximum feed speed		5 m/s	
Thermal expansion coefficient		(12.0±1.5) ×10^{-6} /°C (when attached to material equivalent to steel)	(8±1.0) ×10^{-6}/°C
Operating conditions	Temperature	0 to 50°C	
	Humidity	20 to 80%RH	
Storage conditions	Temperature	−20 to 70°C	
	Humidity	20 to 80%RH	
Power supply voltage		5V±10% (at the detector head) (Ripple and spike noise should not exceed 100mV)	
Current consumption		270mA (Max.)	
Vibration resistance		300m/s^2 (55 to 2000Hz)	100m/s^2 (55 to 2000Hz)
Shock resistance		500m/s^2 (half-sine, 11ms)	150m/s^2 (half-sine, 11ms)
Head cable	Length/cable diameter	1m / ø3.8mm (high-flex cable)	
	Connector	1) D-sub (15-pin pin type) connector (not waterproof) 2) D-sub (9-pin socket type) connector (not waterproof): for ST788A	
Maximum signal cable length		Up to 29m (head cable length included) (Please consult the user's manual)	
Detector mounting		1 location each on top and sides	
Direction of cable outlet		4 sides (top, bottom, left, right) can be selected	

All products to be sold to commercial customers. Product illustrations are without obligation. Product descriptions, in particular any and all technical specifications, are only binding when explicitly agreed upon. For suggested retail prices, please refer to the separate price list.

Linear Scale ABS ST1300

Series 579 - High-speed, high-resolution Absolte Tape Scale

Long, fast and diverse connectivity

- Realizes a 12m maximum effective length, 8-m/s max. response speed and 1nm minimum resolution.
- Extensive interface compatibility. See specifications below for details.
- Outstanding robustness against contamination compared to earlier photoelectric types achieved using a new detection principle.
- Choice between double-sided tape and fixed-ends mounting methods.
- Signal validation program facilitates mounting adjustment and maintenance.
- Applicable Interfaces: FANUC; Mitsubishi Electric; Yaskawa Electric; Panasonic; Mitutoyo ENSIS standard interface
  *: dependent on controller

Specifications

Range	max. 12 m
Accuracy	10 µm/m (± 5µm)
Applicable Interfaces	FANUS; Mitsubishi Electric; Yaskawa Electric; Panasonic; Mitutoyo ENSIS standard interface
Max. response speed	8 m/s (Varies according to the interface)
Min. resolution	1 nm / 10 nm
Scale specifications	Metal tape

All products to be sold to commercial customers. Product illustrations are without obligation. Product descriptions, in particular any and all technical specifications, are only binding when explicitly agreed upon. For suggested retail prices, please refer to the separate price list.

Linear Scale - Fiber Scale

Specifications

Signal output cycle	2 µm
Output signal	2-phase sine wave (2Vpp); 2-phase square wave
Effective length	max. 100 mm
Detector head dimensions	5 x 9,6 x 15 mm (S type); 6 x 20 x 10,4 mm (L Type)
Fiber-optic cable lenght	2, 3, 5, 10 m (or 20, 30 m by special order)
Max. response speed	0,8 m/s (with sine-wave output)
Min. resolution	10 nm (with square-wave output)

Series 579 - Ultra-compact Linear Encoder

Small detector head allows reduction in size and weight of equipment

- Separating electronic components from the inside of the detector head using an optical fiber-guided wave enables an ultra-compact unit without a heat source and free of electromagnetic noise.
- The ultra-compact detector head, the world's smallest, is ideal for reducing the size and weight of systems.
- 2µm signal output cycle contributes to the development of high-resolution systems.
- LED indicators on the interface unit eliminate the need for an oscilloscope during detector head mounting adjustment, helping to reduce installation work.

All products to be sold to commercial customers. Product illustrations are without obligation. Product descriptions, in particular any and all technical specifications, are only binding when explicitly agreed upon. For suggested retail prices, please refer to the separate price list.

MICSYS-SA1

Series 549

This high-accuracy non-contact 2D encoder uses image correlation.
The MICSYS-SA1 offers you the following benefits:
- Simultaneous XY position measurements.
- Nanometer resolution.
- Possible to measure on workpiece.
- You can align it easily.
- It allows you to carry out minute strain and deflection measurements.

Applications:
- Nano positioning
- Monitor performance of metrology and manufacturing frames (drift, hysteresis, repeatability)
- Measure deformation

549-701D

No.
549-701D

Specifications

Digital step	1 nm
Accuracy	± 100 nm
Linearity (at 20°)	80 nm
Working distance	10±0,2 mm (including thickness of standard target : 6,1 mm)
Data Update Period	20Hz
Laser wavelength	650 nm (Visible) Class 2
Operating temperature and humidity	Detector: 15 - 25°C, I/F unit: 0-40°C, 20 - 80 % RH (Non-condesing)
Interface	RS-232C
Standard accessories	Standard target, Sample software for data correclation (on CD-ROM)
Power supply	AC100-240V 45W 50/60Hz

Refer to the Micsys brochure for more details

All products to be sold to commercial customers. Product illustrations are without obligation. Product descriptions, in particular any and all technical specifications, are only binding when explicitly agreed upon. For suggested retail prices, please refer to the separate price list.

Optical Measuring Systems

Magnifiers
Page 424

Measuring Microscopes
Page 426

Microscope Units
Page 451

Eyepieces and Objective Lenses
Page 454

Measuring Projectors
Page 462

All products to be sold to commercial customers. Product illustrations are without obligation. Product descriptions, in particular any and all technical specifications, are only binding when explicitly agreed upon. For suggested retail prices, please refer to the separate price list.

Precision Magnifier

Series 183

This magnifier is ideal for a variety of measuring tasks.
With the Precision Magnifier you can:
- Easily perform measurements including length, diameter, line thickness and thread pitch.
- Replace the reticles quickly.

183-101

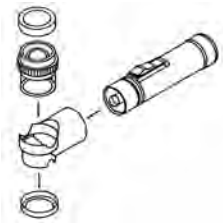

950757
(optional illuminator)

Pocket Comparators

No.	Dimensions [mm]	Magnification	Field of View [mm]	Mass [g]
183-101	Ø 37 x 48	8X	24,5	40
183-131	Ø 37 x 45	10X	24,5	42

Pocket Comparators Set delivered in a case (including magnifier and reticles)

No.	Set compilation
183-902	183-101, 183-102, 183-106, 183-107, 183-112, 183-113, 183-114
183-903	183-101, 183-102, 183-106, 183-107, 183-109, 183-113, 183-115
183-904	183-101, 183-102

Reticles for Pocket Comparators

No.	Description
183-102	Diameter **0,1; 0,2; 0,3; 0,4; 0,5; 0,6; 0,7; 1,5; 3 mm** Grid 0,3" x 0,4" (Pitch 0,025") Radius **0 – 10 mm** (Pitch **0,5 mm**) Angle 0 – 90° (Pitch 1°) Scale **0 – 10 mm** (Pitch **0,1 mm**)
183-103	Angle, radius, length, diameter
183-104	Thickness **0,02 – 0,16 mm** (Pitch **0,01 mm**)
183-105	Angle 0 – 90° (Reading 0–10° = 1°; 10–90° = 5°) Radius **0 – 10 mm** (Reading **0,5 mm**) Diameter **0,1–1 mm** (Reading **0,1 mm**) Scale **0 – 10 mm** (Reading **0,1 mm**) Grid **5 x 10 mm** (Pitch **1 mm**)
183-107	Angle 0 – 90° (Reading 0–80° = 5°; 80–90° = 1°) Radius **0 – 10 mm** (Reading **0–1 mm = 0,1 mm; 1–10 mm = 0,5 mm**) Scale 0 – 3⁄8"
183-108	Grid **10 x 10 mm** (Pitch **0,5 mm**) Diameter **0,1; 0,2; 0,3; 0,4; 0,5; 0,6; 0,7; 0,8; 0,9: 1; 1,5; 2; 2,5 mm**
183-109	Scale **0 – 20 mm** (Reading **0,1 mm**)
183-110	Angle 0 – 180° (Reading 1°) Radius **0 – 10 mm** (Reading **0,5 mm**)
183-111	Thread pitches **0,25; 0,3; 0,35; 0,4; 0,45; 0,6; 0,75; 0,9; 10 mm**
183-113	Angle 0 – 90° (Reading 1°) Radius 0 – 0,5" (Reading 0 – 0,5" = 0,005") Scale **0 – 10 mm** (Reading **0,1 mm**)
183-115	ISO-Thread pitches **0,25; 0,3; 0,35; 0,4; 0,45; 0,5; 0,7; 0,8; 1 mm**

Also available! Inch Models

Specifications

Reticle diameter	30 mm

Optional accessories

No.	Description
950757	Illumination Attachment
353489	Battery (LR14)/178

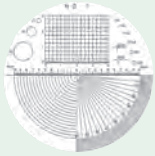

183-102

183-103

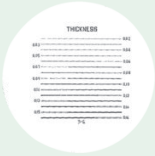

183-104

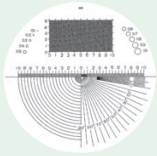

183-105

183-107

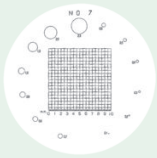

183-108

183-109

183-110

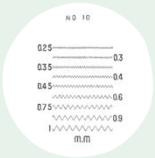

183-111

183-113

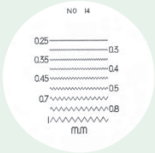

183-115

All products to be sold to commercial customers. Product illustrations are without obligation. Product descriptions, in particular any and all technical specifications, are only binding when explicitly agreed upon. For suggested retail prices, please refer to the separate price list.

Pocket Magnifiers

Series 183 - Slim model

These slim model pocket magnifiers are designed to give you maximum stability, secure holding and easy handling.

183-201

No.	Dimensions [mm]	Magnification	Field of View [mm]	Mass [g]
183-201	ø14,5 x 125	25X	3,4	17

Series 183 - Freestanding model

183-202

183-203

No.	Dimensions [mm]	Magnification	Field of View [mm]	Mass [g]
183-202	ø31,5 x 115	25X	3,3	90
183-203	ø31,5 x 100	50X	1,6	82

Series 183

- Clear Loupe Magnifiers.
- Transparent draw tube enables clear imaging of the workpiece.

183-301

183-302

183-303

183-304

Reticle
(provided with 183-304)

No.	Dimensions [mm]	Magnification	Field of View [mm]	Mass [g]
183-301	ø32 x 43	7X	25	17
183-302	ø32 x 40	10X	24	18
183-303	ø32 x 30	15X	10	23
183-304	ø45 x 70	8 - 16X zoom	10 - 20	149

All products to be sold to commercial customers. Product illustrations are without obligation. Product descriptions, in particular any and all technical specifications, are only binding when explicitly agreed upon. For suggested retail prices, please refer to the separate price list.

Measuring Microscope TM Generation B Series

Series 176

With this Toolmaker's Microscope you can measure dimensions and angles on small workpieces thanks to the optional analogue or digital micrometer heads and the built-in circular scale.

Further benefits of the TM Generation B include:
- Toolmakers microscopes well-suited for measuring dimensions and angles of features on small workpieces with the XY stage and rotating eyepiece scale.
- Compact design with recessed grips for better portability. The slim design makes this microscope ideal for use in areas with limited space.
- Powerful adjustable LED light sources for contour and surface illumination provide optimum lighting conditions for workpiece inspection.
- The TM Generation B is available with work stages of 50 x 50 mm or 100 x 50 mm.

TM-505B fitted with optional digimatic micrometer heads

Rotating eyepiece with angle reading

TM-1005B with optional LED ringlight (63AAA001), 0.37X Eyepiece adapter (63AAA060) and digital HDMI camera (63AAA059)

Specifications

Observation image	Erect
Angle reading	Range : 360° Minimum reading : 6' (by vernier)
Objective lens	2X **(176-138)** Working distance: 67 mm Optional: 5X, 10X
Eyepiece	15X **(176-116)**, View field ø13 mm Optional : 10X, 20X
Total magnification	30X
Transmitted illumination	Light source : White LED with green filter Functions: Light intensity adjustable
Surface illumination	Light source : White LED Functions: Light intensity adjustable
Power supply	100/240V AC, 50/60Hz
Mass	TM-505B: 14 [kg] TM-1005B: 15 [kg]

Standard accessories

No.	Description
176-116	Eyepiece for TM 15X
176-138	Objective Lens for TM 2X
176-126	Reticle for TM, 90° Broken Cross-hair

Optional accessories

No.	Description
63AAA059	HDMI6MDPX camera, including HDMI cable, mouse and simple calculation and reporting software on SD card
63AAA060	0.37X C-mount to Eyepiece adapter for TM microscopes
63AAA155	Mechanical adapter for mounting the HDMI camera on the ocular tube
63AAA001	LED Ringlight, for TM-500

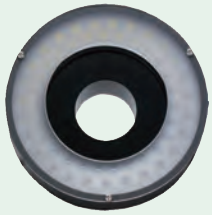

Optional LED Ring Light 63AAA001

Digital camera for TM microscopes
Mounting the HDMI6MDPX digital camera into the ocular tube transforms the TM microscope into a digital microscope.
- HDMI6MDPX, 6 megapixel colour camera with direct HDMI output to a monitor, no PC necessary
- Integrated SD card for saving images and pre-installed software for performing basic in-screen measurements
- Intuitive operation of the software with standard supplied USB mouse

All products to be sold to commercial customers. Product illustrations are without obligation. Product descriptions, in particular any and all technical specifications, are only binding when explicitly agreed upon. For suggested retail prices, please refer to the separate price list.

Measuring Microscope TM Generation B Series

Series 176

Dimensions

Model	TM-505B	TM-1005B
No.	**176-818D**	**176-819D**
XY stage table top size	152 x 152 mm	240 x 152 mm
Effective area of table	96 x 96 mm	154 x 96 mm
XY stage travel range	50 x 50 mm	100 x 50 mm
Max. workpiece height mm	115	107

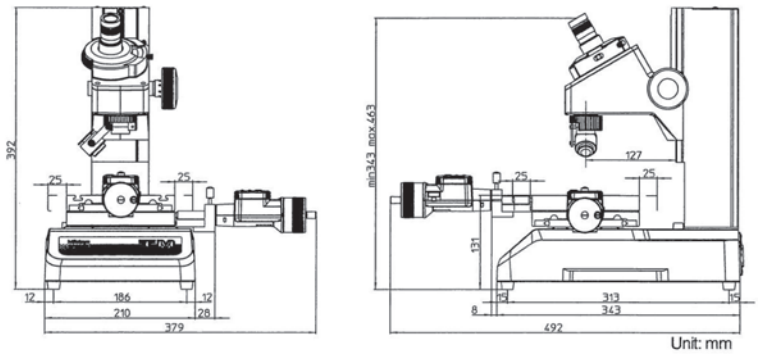

TM-505B

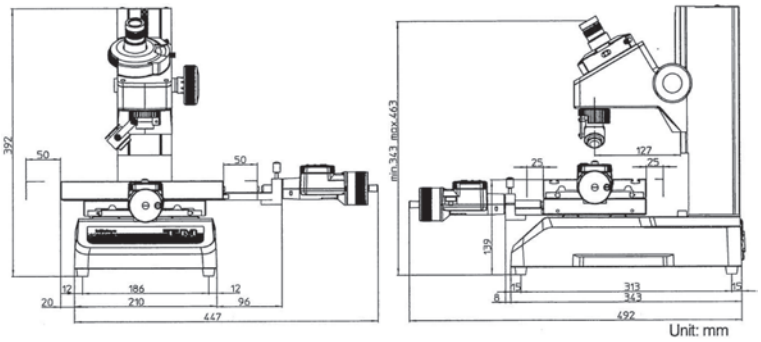

TM-510B

All products to be sold to commercial customers. Product illustrations are without obligation. Product descriptions, in particular any and all technical specifications, are only binding when explicitly agreed upon. For suggested retail prices, please refer to the separate price list.

Mitutoyo

Accessories for Measuring Microscope TM Generation B

Series 176

Accessories

Objective Lenses and Eyepieces

No.	Objective lens	Eyepiece 10X (176-115)	Eyepiece 15X (176-116)	Eyepiece 20X (176-117)
176-137	10X	100X (1,3 mm)	150X (1,3 mm)	200X (1 mm)
176-138	2X (1)	20X (6,5 mm)	30X (6,5 mm)	40X (5 mm)
176-139	5X	50X (2,6 mm)	75X (2,6 mm)	100X (2 mm)

(1) Standard accessory
The number in brackets is the diameter of the field of view

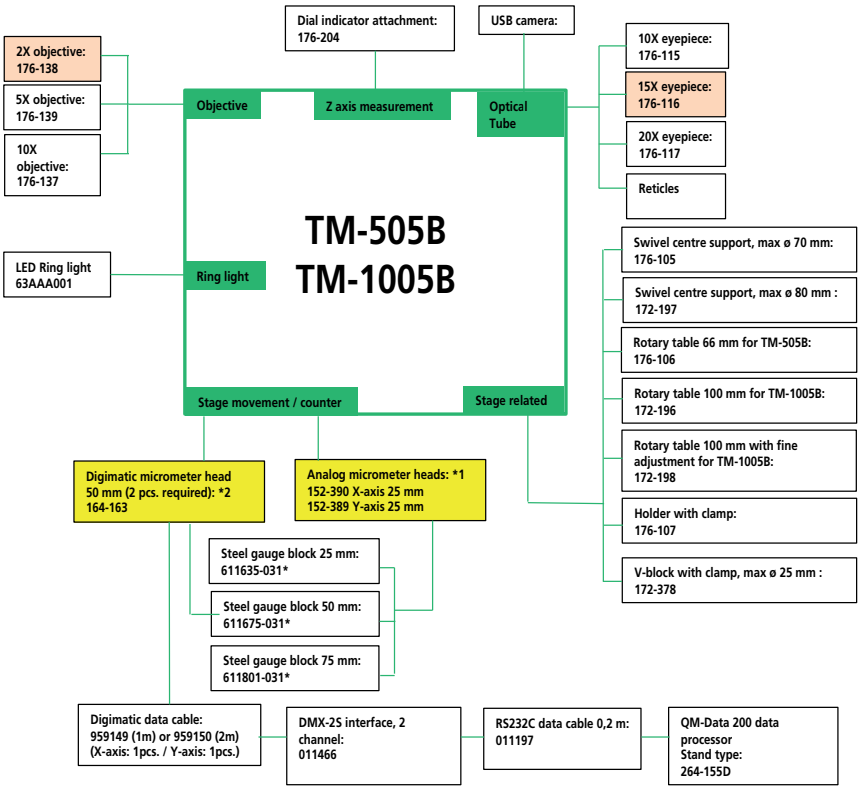

*** Necessary gauge blocks for extending stage travel range:**

Stage travel range	TM with analog micrometer heads 0-25 mm	TM with digimatic micrometer heads 0-50 mm
Range 25-50 mm	X-axis:611635-031 Y-axis:611635-031	
Range 25-75 mm	X-axis:611675-031	
Range 25-100 mm	X-axis:611801-031	
Range 50-100 mm		X-axis:611675-031

Optional accessories

No.	Description
176-115	Eyepiece for TM 10X
176-117	Eyepiece for TM 20X
176-139	Objective Lens for TM 5X
176-137	Objective Lens for TM 10X
152-390	Micrometer Head XY-Stage, Thimble 49mm, 0-25mm, X-Axis
152-389	Micrometer Head XY-Stage, Thimble 49mm, 0-25mm, Y-Axis
176-204	Dial Indicator Attachment, for TM
176-106	Rotary table
176-105	Fixture/clamping material, Swivel center support
172-197	Fixture/clamping material Swivel center support
172-378	Fixture/clamping material, V-block with clamp
176-107	Fixture/clamping material, Holder with clamp
990561	Fixture/clamping material, Workpiece holding clip for 172-Series
164-163	Digital Micrometer Head, 0-50mm, Digimatic
959149	Digimatic Cable, Straight, Data Button, 1m
959150	Digimatic Cable, Straight, Data Button, 2m
06ADV380C	USB Input Tool Direct (Digimatic USB), Straight, with Data Button
02AZD790C	U-WAVE T Connection Cable C, Straight, with Data Button
611635-031	Gauge Block, Metric, Inspection Cert., ISO, Grade 1, Steel, 25mm
611675-031	Gauge Block, Metric, Inspection Cert., ISO, Grade 1, Steel, 50mm
172-196	Rotary table, 100 mm for TM-1005B
172-198	Rotary table, 100 mm with fine feed knob for TM-1005B
63AAA001	LED Ringlight, for TM-500

176-106 : for stage 50 x 50 mm
172-196 and 172-198 : for stage 100 x 50 mm

All products to be sold to commercial customers. Product illustrations are without obligation. Product descriptions, in particular any and all technical specifications, are only binding when explicitly agreed upon. For suggested retail prices, please refer to the separate price list.

Accessories for Measuring Microscope TM Generation B

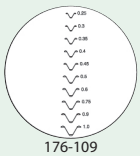
176-109

176-110

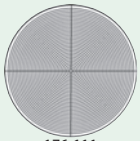
176-111

176-112

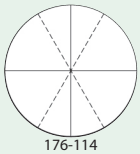
176-114

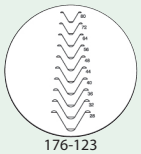
176-123

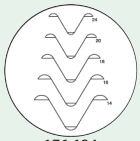
176-124

176-125

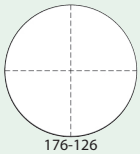
176-126

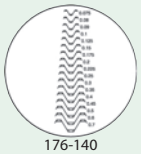
176-140

176-141

Series 176

Reticles

No.	Remarks
176-109	Metric screw threads (pitch = 0,25 - 1 mm)
176-110	Metric screw threads (pitch = 1,25 - 2 mm)
176-111	Concentric circle (up to ø 4 mm, 0,05 mm increment)
176-112	20° involute gear teeth (normal rack type)
176-114	60° angle
176-123	Unified screw threads (80 - 28TPI)
176-124	Unified screw threads (24 - 14TPI)
176-125	Unified screw threads (13 - 10TPI)
176-126	Cross-hair (standard accessory)
176-140	ISO metric screw threads (0,075 - 0,7 mm)
176-141	ISO metric screw threads (0,75 - 2 mm)

All products to be sold to commercial customers. Product illustrations are without obligation. Product descriptions, in particular any and all technical specifications, are only binding when explicitly agreed upon. For suggested retail prices, please refer to the separate price list.

Measuring Microscope MF Generation D Series

Series 176

MF Generation D Series: Manual models

This versatile measuring microscope, whether you use it to boost the performance with Mitutoyo's vision unit, for data management on a PC or other applications, offers you further improved measuring efficiency.

The MF offers you the following benefits:

- Measuring accuracy that is one of the highest in its class.
- Proven high-NA objectives from the ML optical series (long working distance type).
- Integration of metallurgical and measurement microscope functions enabling you to make high-resolution observations and high-accuracy measurements.
- Illumination unit (reflected/transmitted) gives you the option of a high-intensity LED or halogen bulb.
- The variable aperture diaphragm (reflected/ transmitted) allows observation measurement while suppressing light diffraction.
- Variety of standardized stages in sizes up to 400 × 200 mm.
- Quick-release mechanism enabling you to move the stage quickly when measuring large or numerous workpieces.
- High-magnification eyepiece observation up to 2000X.
- A good choice of optional accessories, including a Vision Unit, various digital cameras or data management on a PC, promises a wide field of application and excellent measuring efficiency.

MF-B2017D

Using optional slide type nosepiece with 2-lens mount (factory-fit option)

1010D
100x100 mm

2010D
200x100 mm

3017D
300x170 mm

4020D
400x200 mm

Specifications

Observation image	Erect image
Optical tube	Monocular or binocular tube (depression: 25"), Reticle projection method, with TV mount, Optical path ratio (eyepiece/TV mount: 50/50)
Eyepiece	10X, 15X, 20X
Objective lens	Standard: 3X Optional: 1X, 5X, 10X, 20X, 50X, 100X
Transmitted illumination	Optical system: Telecentric illumination with adjustable aperture diaphragm Functions: Light intensity adjustable, non-stepped brightness adjustment
Surface illumination	Optical system: Koehler illumination with adjustable aperture diaphragm Functions: Light intensity adjustable, non-stepped brightness adjustment
Display unit	No. of axes: 2 (MF-A type) or 3 (MF-B type) Resolution: 0,001 mm/0,0005 mm/ 0,0001 mm Functions: Zero-setting, Direction switching, Data output (USB and RS-232C interface)
Indication accuracy (at 20°C)	XY-axis: (2,2+0,02L) µm Z-axis: (5+0,04L) µm L: Measuring length (mm) when not loaded, JIS B 7153
Floating function	X and Y axes with Quick-release mechanism
Power supply	100/110/120/220/240 VAC, 50/60Hz

Reticle mounts (standard accessories)

176-392
Optional monocular

176-393
Optional binocular

Refer to the MF / MF-U microscopes brochure

All products to be sold to commercial customers. Product illustrations are without obligation. Product descriptions, in particular any and all technical specifications, are only binding when explicitly agreed upon. For suggested retail prices, please refer to the separate price list.

Measuring Microscope MF Generation D Series

Series 176

Specifications/Dimensions

Model	1010D	2010D	2017D	3017D	4020D
No.	**176-861-10 176-866-10**	**176-862-10 176-867-10**	**176-863-10 176-868-10**	**176-864-10 176-869-10**	**176-865-10 176-870-10**
MF-A (2 axis) No.	176-861-10	176-862-10	176-863-10	176-864-10	176-865-10
MF-B (3 axis) No.	176-866-10	176-867-10	176-868-10	176-869-10	176-870-10
XY stage travel range	100 x 100 mm	200 x 100 mm	200 x 170 mm	300 x 170 mm	400 x 200 mm
Z-axis travel range mm	150	150	220	220	220
XY stage top size mm	280 x 280	350 x 280	410 x 342	510 x 342	610 x 342
Effective glass size mm	180 x 180	250 x 150	270 x 240	370 x 240	440 x 240
Swivelling function	-	-	±5° (left)	±5° (left)	±3° (left)
Max. stage loading kg	10	10	20	20	15
Max. workpiece height mm	150	150	220	220	220
Mass kg	65,5	69,5	130	138	144

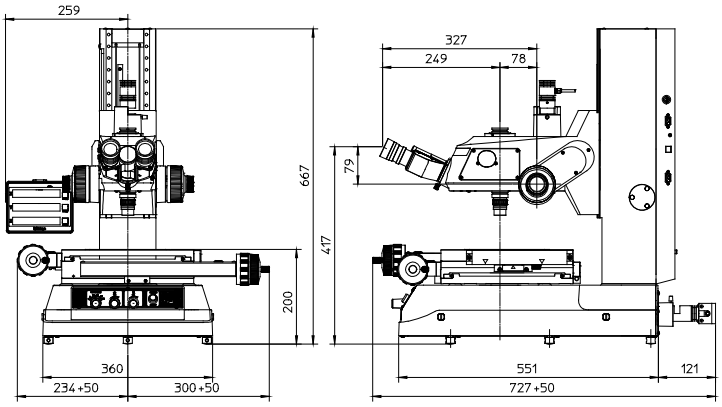

1010D

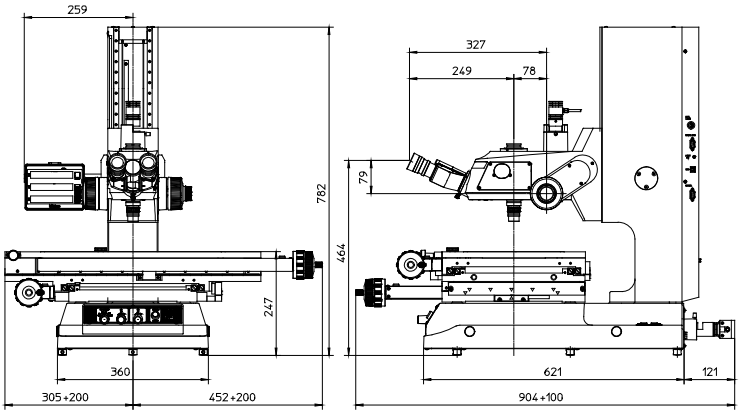

4020D

Optional accessories

No.	Description
12BAB345	Bulb, Halogen; 12V/50W (2 Pin Fitting)
176-308	Vibration Isolator, Spring Pad
375-056	Calibration Micro Scale
264-155D	2D Data processor, QM-Data 200, stand type
12AAJ088	Footswitch
Eyepieces	
176-392	Optical Tube, Monocular
176-393	Optical Tube, Binokular
375-043	Protractor Eyepiece 10X
176-313D	Eyepiece for MF Gen. B, Digital Protractor Type
378-856-5	Eyepiece 10X
378-857-5	Eyepiece 15X
378-858-5	Eyepiece 20X
Filters	
12AAA643	Illumination Filter ND2
12AAA644	Illumination Filter ND8
12AAA645	Illumination Filter GIF
12AAA646	Illumination Filter LB80
Invenio 5SCIII camera	
63AAA058	Invenio 5SCIII camera, including Insight LE software on 8GB USB stick and USB3.0 cable
63AAA066	Mitutoyo MF package: This software package includes Insight Basic EEEF extended depth op focus Topography Segmentation and counting
63AAA067	0,5x camera adapter with C-mount for MF/MF-U microscope
Mounts	
375-054	Camera Adaptor, 0.5X incl. C-Mount
970441	Camera Adaptor, C-Mount
176-370-1	Slide Type Nosepiece, Parfocal
176-370-2	Slide Type Nosepiece, w. Magnification Guaranteed
Objective Lenses	
375-036-2	ML Objective Lens 1X
375-037-1	ML Objective Lens 3X
375-034-1	ML Objective Lens 5X
375-039	ML Objective Lens 10X
375-051	ML Objective Lens 20X
375-052	ML Objective Lens 50X
375-053	ML Objective Lens 100X

Digital camera for MF / MF-U microscopes

Mounting the Invenio camera onto the C-mount adapter transforms the MF microscope into a powerful digital microscope.

- Invenio 5SCIII, 5 megapixel colour camera with high speed USB3 communication
- Ideal for documentation and analysis for a wide range of applications
- Mitutoyo MF software package enhances the functionality of the microscope with:
- Reporting functionality of images and measurement results
- Images with extended depth of focus
- 3D topography observation by stacking images in Z-direction
- Counting of particles

Focus pilot FP-05
Focus assisting system

QM-Data 200

Vision Unit
PC-based vision measuring system

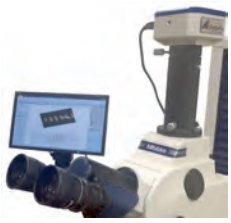

Invenio digital camera (63AAA058) with
0.5X C-mount adapter (63AAA067) for advanced observations

All products to be sold to commercial customers. Product illustrations are without obligation. Product descriptions, in particular any and all technical specifications, are only binding when explicitly agreed upon. For suggested retail prices, please refer to the separate price list.

Mitutoyo

Measuring Microscope MF Generation D Series

Series 176

MF Generation D Series: Models with motorized Z-axis movement
The MF Generation D version with a motorized Z-axis. This feature renders fast and accurate Auto Focus possible when used in combination with the optional Vision Unit. The MF with motorized Z-axis is available in 3 stage sizes and incorporates all the functionality of the standard MF Generation D series.

The MF Generation D with motorized Z-axis offers the following benefits:
- Auto Focus function when using the optional Vision Unit.
- A measuring accuracy that is one of the highest in its class.
- Proven high-NA objectives (long working distance type).
- Integration of metallurgical and measurement microscope functions enabling you to make high-resolution observations and high-accuracy measurements.
- Illumination unit (reflected/transmitted) offers the option of a high-intensity LED or halogen bulb.
- The variable aperture diaphragm (reflected/ transmitted) allows observation measurement while suppressing light diffraction.
- Variety of 3 standardized stages in sizes up to 400 × 200 mm.
- Quick-release mechanism enabling you to move the stage quickly when measuring large or numerous workpieces.
- High-magnification eyepiece observation up to 2000X.
- A large lineup of optional accessories, including a Vision Unit, various digital cameras and data management for a PC, grants a wide field of applications and excellent measuring efficiency.

MF-J2017D

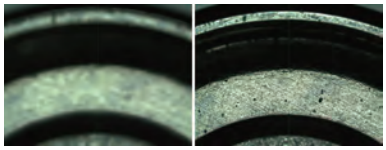

Screen image before and after Auto Focus*
*** When using optional Vision Unit**

Specifications

Observation image	Erect image
Optical tube	Monocular or binocular tube (depression: 25"), Reticle projection method, with TV mount, Optical path ratio (eyepiece/TV mount: 50/50)
Eyepiece	10X, 15X, 20X
Objective lens	Standard: 3X Optional: 1X, 5X, 10X, 20X, 50X, 100X
Transmitted illumination	Optical system: Telecentric illumination with adjustable aperture diaphragm Functions: Light intensity adjustable, non-stepped brightness adjustment
Surface illumination	Optical system: Koehler illumination with adjustable aperture diaphragm Functions: Light intensity adjustable, non-stepped brightness adjustment
Display unit	No. of axes: 3 Resolution: 0,001 mm/0,0005 mm/ 0,0001 mm Functions: Zero-setting, Direction switching, Data output (USB and RS-232C interface)
Indication accuracy (at 20°C)	XY-axis: (2,2+0,02L) µm Z-axis: (5+0,04L) µm L: Measuring length (mm) when not loaded, JIS B 7153
Floating function	X and Y axes with Quick-release mechanism
Power supply	100/110/120/220/240 VAC, 50/60Hz
Remote Box	- Speed adjustment - Coarse/Fine Speed switching - Jog shuttle - Emergency stop switch - AF button - Counter reset button - Data output button - Power switch - Limit setting (Z-axis) Remote Box

Refer to the MF / MF-U microscopes brochure

All products to be sold to commercial customers. Product illustrations are without obligation. Product descriptions, in particular any and all technical specifications, are only binding when explicitly agreed upon. For suggested retail prices, please refer to the separate price list.

Measuring Microscope MF Generation D Series

Series 176

Specifications/Dimensions

MF Generation D: Models with motorized Z-axis movement

Model	MF-J2017D	MF-J3017D	MF-J4020D
No.	**176-891D**	**176-892D**	**176-893D**
XY stage travel range	200 x 170 mm	300 x 170 mm	400 x 200 mm
Z-axis travel range mm	220	220	220
XY stage top size mm	410 x 342	510 x 342	610 x 342
Effective glass size mm	270 x 240	370 x 240	440 x 240
Swivelling function	±5° (left)	±5° (left)	±3° (left)
Max. stage loading kg	20	20	15

Focus pilot FP-05
Focus assisting system

QM-Data 200

Vision Unit
PC-based vision measuring system

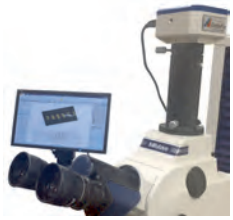

Invenio digital camera (63AAA058) with
0.5X C-mount adapter (63AAA067) for advanced observations

Optional accessories

No.	Description
12BAB345	Bulb, Halogen; 12V/50W (2 Pin Fitting)
176-308	Vibration Isolator, Spring Pad
375-056	Calibration Micro Scale
264-155D	2D Data processor, QM-Data 200, stand type
12AAJ088	Footswitch
Eyepieces	
176-392	Optical Tube, Monocular
176-393	Optical Tube, Binokular
375-043	Protractor Eyepiece 10X
176-313D	Eyepiece for MF Gen. B, Digital Protractor Type
378-856-5	Eyepiece 10X
378-857-5	Eyepiece 15X
378-858-5	Eyepiece 20X
Filters	
12AAA643	Illumination Filter ND2
12AAA644	Illumination Filter ND8
12AAA645	Illumination Filter GIF
12AAA646	Illumination Filter LB80
Invenio 5SCIII camera	
63AAA058	Invenio 5SCIII camera, including Insight LE software on 8GB USB stick and USB3.0 cable
63AAA066	Mitutoyo MF package: This software package includes Insight Basic EEEF extended depth op focus Topography Segmentation and counting
63AAA067	0,5x camera adapter with C-mount for MF/MF-U microscope
Mounts	
375-054	Camera Adaptor, 0.5X incl. C-Mount
970441	Camera Adaptor, C-Mount
176-370-1	Slide Type Nosepiece, Parfocal
176-370-2	Slide Type Nosepiece, w. Magnification Guaranteed
Objective Lenses	
375-036-2	ML Objective Lens 1X
375-037-1	ML Objective Lens 3X
375-034-1	ML Objective Lens 5X
375-039	ML Objective Lens 10X
375-051	ML Objective Lens 20X
375-052	ML Objective Lens 50X

Digital camera for MF / MF-U microscopes

Mounting the Invenio camera onto the C-mount adapter transforms the MF microscope into a powerful digital microscope.

- Invenio 5SCIII, 5 megapixel colour camera with high speed USB3 communication
- Ideal for documentation and analysis for a wide range of applications
- Mitutoyo MF software package enhances the functionality of the microscope with:
- Reporting functionality of images and measurement results
- Images with extended depth of focus
- 3D topography observation by stacking images in Z-direction
- Counting of particles

All products to be sold to commercial customers. Product illustrations are without obligation. Product descriptions, in particular any and all technical specifications, are only binding when explicitly agreed upon. For suggested retail prices, please refer to the separate price list.

Measuring Microscope MF Generation D Series

Series 176

MF Generation D Series: Motor driven models
All the functionality of the manual MF Generation D Series enhanced with motor driven axis in X, Y and Z offers the best you can expect of a measuring microscope when efficiency and operability is concerned.

The MF-D Series offers you the following benefits:
- Motor driven axis enabling you to move the stage quickly and without fatigue, ideal for measuring large or numerous workpieces.
- ML series, high NA objective lenses with long working distance.
- Focussing made easy when using the optional Vision Unit.
- Measuring accuracy that is one of the highest in its class.
- Illumination unit (reflected/transmitted) gives you the option of a high-intensity LED or halogen bulb.
- The variable aperture diaphragm (reflected/ transmitted) allows observation measurement while suppressing light diffraction.
- Variety of standardized stages in sizes up to 400 × 200 mm.
- High-magnification eyepiece observation up to 2000X.
- A good choice of optional accessories, including a Vision Unit, digital cameras or data management on a PC, promises a wide field of application and excellent measuring efficiency.

MF-G2017D

MF Generation D: Motor driven models

Model	MF-G2017D	MF-G3017D	MF-G4020D
No.	**176-781D**	**176-782D**	**176-783D**
XY stage travel range	200 x 170 mm	300 x 170 mm	400 x 200 mm
Effective glass size mm	270 x 240	370 x 240	440 x 240
Z-axis travel range mm	220	220	220
XY stage top size mm	410 x 342	510 x 342	610 x 342
Max. stage loading kg	20	20	15

Specifications

Resolution (switchable)	0,0001mm/0,0005mm/0,001mm
Observation image	Erect image
Optical tube	Monocular or binocular tube (depression: 25°), Reticle projection method, with TV mount, Optical path ratio (eyepiece/TV mount: 50/50)
Eyepiece	10X, 15X, 20X
Transmitted illumination	Optical system: Telecentric illumination with adjustable aperture diaphragm Functions: Light intensity adjustable, non-stepped brightness adjustment
Surface illumination	Optical system: Koehler illumination with adjustable aperture diaphragm

176-392
Optional monocular

176-393
Optional binocular

Refer to the MF/MF-U microscopes brochure

All products to be sold to commercial customers. Product illustrations are without obligation. Product descriptions, in particular any and all technical specifications, are only binding when explicitly agreed upon. For suggested retail prices, please refer to the separate price list.

Accessories for Measuring Microscope MF Generation D

Series 176

Accessories/system diagram system for MF manual and motorized Z-axis models

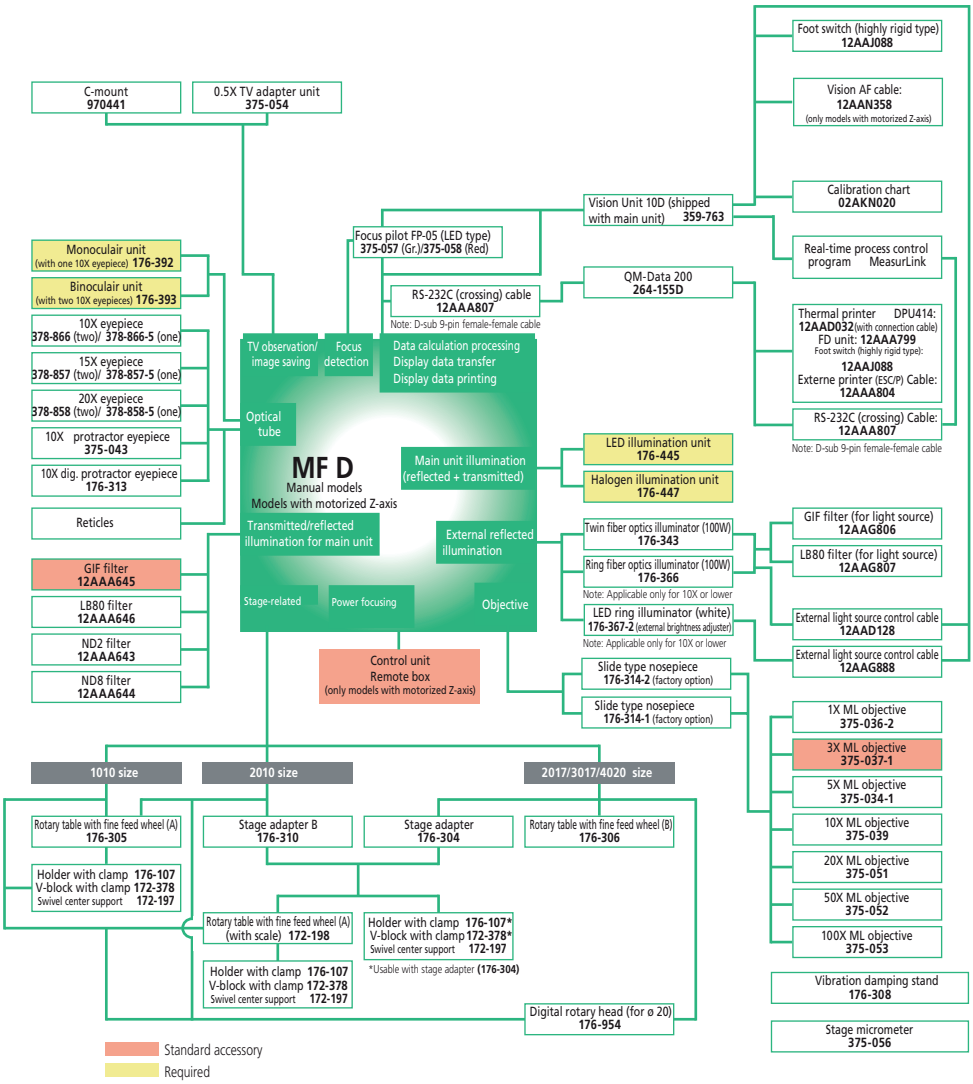

Optional accessories

No.	Description
176-305	Rotary Table, Type A, D=240 mm
176-306	Rotary Table, Type B, D=270 mm
176-107	Fixture/clamping material, Holder with clamp
172-197	Fixture/clamping material Swivel center support
172-378	Fixture/clamping material, V-block with clamp
172-198	Rotary table, 100 mm with fine feed knob for TM-1005B
12AAA807D	Cable RS-232C 2m
12AAG806	Illumination Filter GIF
12AAG807	Illumination Filter LB80
12AAJ088	Footswitch
Eyepieces	
378-856	Eyepiece, 10X/24
378-856-5	Eyepiece 10X
Lighting	
176-343D	Twin Fiber Illumination, for MF, MF-U
176-367-2D	Ringlight LED
176-351-6	Oblique Surface Illumination for MF
Lighting (required option)	
176-445D	Illumination Unit LED
176-447D	Illumination Unit, Halogen
Reticles	
12AAG838	Reticle for MF, Broken Cross-hair (7 µm line width)
12AAG847	Reticle for MF Gen. B, Metric Coarse Screw Thread (p=0,5-1,0)
12AAG848	Reticle for MF, Metric Coarse Screw Thread (p=1,25-2,0)
12AAG849	Reticle for MF, Involute Gear Tooth 14.5° (m=0,1-1,0)
12AAG850	Reticle for MF, Involute Gear Tooth 20° (m=0,1-1,0)
12AAG851	Reticle for MF, Unified Screw Thread (80-28TPI)
12AAG852	Reticle for MF, Unified Screw Thread (24-14TPI)
12AAG853	Reticle for MF, Unified Screw Thread (13-10TPI)
12AAG836	Reticle for MF, Broken Cross-hair (5 µm line width)
12AAG873	Reticle for MF, Broken Cross-hair (3 µm line width)
12AAG840	Reticle for MF, Cross-hair and 60° Broken Lines
12AAG841	Reticle for MF, Zeiss Type Pattern
12AAG842	Reticle for MF, Cross-hair 20 mm scale (0,1 Reading)
12AAG843	Reticle for MF, Concentric Circles (1,2-18 mm)
12AAG844	Reticle for MF Gen. B, Scale 10 mm (0,1 mm Reading)
12AAG839	Reticle for MF, Cross-hair and 45° Broken Lines
12AAG845	Reticle for MF, Scale 5 mm (0,05 mm Reading)

All products to be sold to commercial customers. Product illustrations are without obligation. Product descriptions, in particular any and all technical specifications, are only binding when explicitly agreed upon. For suggested retail prices, please refer to the separate price list.

Mitutoyo

Accessories for Measuring Microscope MF Generation D

Series 176

Accessories/system diagram for MF motor driven models

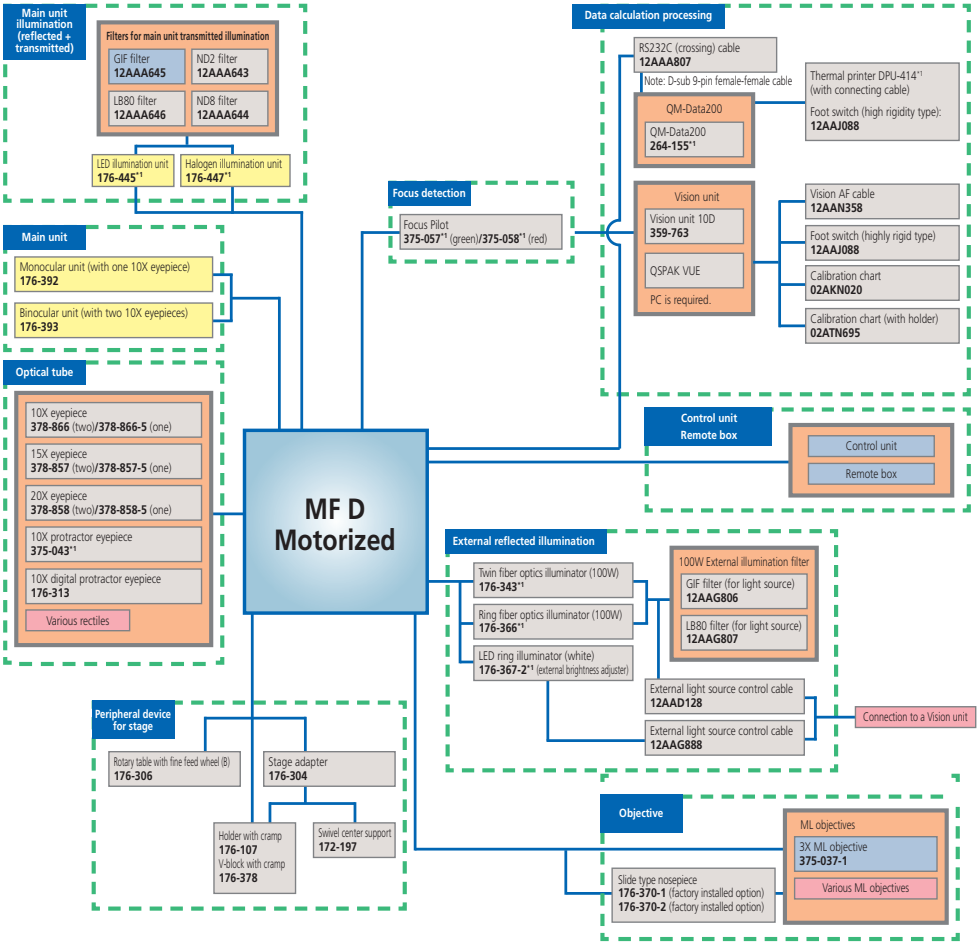

Printing of counter data

- Thermal printer DPU414*1 (with connecting cable)
- Foot switch (highly rigid type) 12AAJ088

Data management

- Real-time process control **MeasurLink**
- Inspection table creation program **MeasureReport**

Note: A PC is required.

- RS232C (crossing) cable 12AAA807

Optional peripheral device

- Vibration damping stand 176-308
- Mounting stand (microscope + QM-Data 200) 176-309
- Vertical system rack (for Vision Unit) 998923
- Lens cleaning set 12AAA165
- Stage micrometer 375-056

*1 Order No. depends on the destination.

Refer to the corresponding page for details.
Required.
Standard accessory.

All products to be sold to commercial customers. Product illustrations are without obligation. Product descriptions, in particular any and all technical specifications, are only binding when explicitly agreed upon. For suggested retail prices, please refer to the separate price list.

Measuring Microscope MF-U Generation D Series

Series 176

MF-U Generation D Series: Manual models

This high-power multi-function measuring microscope gives you detailed observation with a clear and flare-less erect image and a wide field of view.
The MF-U offers you the following benefits:

- Measuring accuracy that is one of the highest in its class.
- Proven high-NA objectives from the FS optical system (long working distance type).
- Integration of metallurgical and measurement microscope functions enabling you to make high-resolution observations and high-accuracy measurements.
- Illumination unit (reflected/transmitted) gives you the option of a high-intensity LED or halogen bulb.
- The variable aperture diaphragm (reflected/ transmitted) allows observation measurement while suppressing light diffraction.
- Variety of standardized stages in sizes up to 400 × 200 mm.
- Quick-release mechanism enabling you to move the stage quickly when measuring large or numerous workpieces.
- High-magnification eyepiece observation up to 2000X.
- A good choice of optional accessories, including a Vision Unit, various digital cameras or data management on a PC, promises a wide field of application and excellent measuring efficiency.

Specifications

Observation image	Erect image
Optical tube	Siedentoph type (pupil distance adjustment : 51 - 76 mm), 1X tube lens, Binocular tube (depression : 30°), Reticle projection method, with TV mount, Optical path ratio (eyepiece/TV mount : 50/50)
Focusing method	Manual (coarse focusing : 10 mm/ rev., fine focusing : 0,1 mm/rev.)
Indication accuracy (at 20°C)	XY-axis: (2,2+0,02L) µm Z-axis: (5+0,04L) µm L: Measuring length (mm) when not loaded, JIS B 7153
Floating function	X and Y axes with Quick-release mechanism
Power supply	220/240V AC, 50/60Hz
Eyepiece lens	10X (field No.: 24 mm) Optional : 15X, 20X
Turret (optional)	Manual or motorized
Objective lens (optional)	M / BD Plan Apo objective from 1X to 100X
Transmitted illumination optional	Light source : Halogen bulb (12V, 50W) Optical system : Telecentric illumination with adjustable aperture diaphragms Functions : Light intensity adjustable, Non-stepped brightness adjustment
Surface illumination optional	Light source : Optional halogen illumination unit (fiber-optic cold light illumination) Optical system : Koehler illumination with adjustable aperture diaphragms Functions : Light intensity adjustable, Non-stepped brightness adjustment
Display unit	Resolution: 0,001mm / 0,0005mm / 0,0001mm No. of axis : 2 axis or 3 axis Functions : Zero-setting, Direction switching, Data output (USB and RS-232C interface)

MF-UB 3017D
(turret, objectives and illumination are optional)

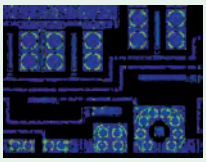

Polarized light

Differential interference contrast

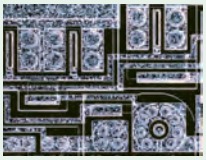

Dark field

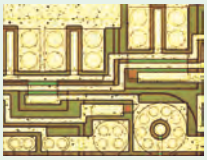

Bright field

Refer to the MF / MF-U microscopes brochure

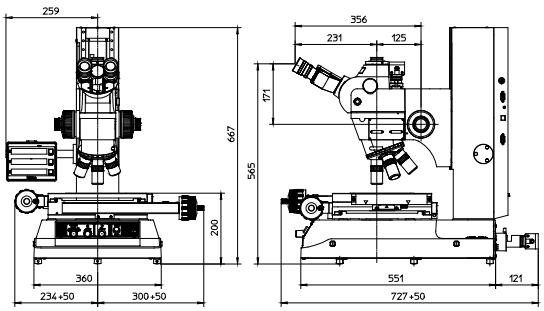

1010D

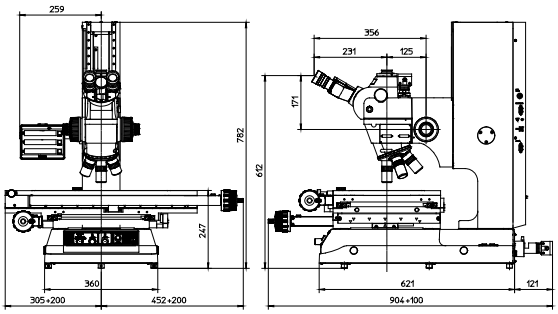

4020D

Optional 5 positions motorized turret

All products to be sold to commercial customers. Product illustrations are without obligation. Product descriptions, in particular any and all technical specifications, are only binding when explicitly agreed upon. For suggested retail prices, please refer to the separate price list.

Mitutoyo

Measuring Microscope MF-U Generation D Series

Series 176 - High-power Multi-function

Model 1010D

Model 2010D

Model 1010D
XY stage travel range : 100 x 100 mm
Z-axis travel range : 150 mm
XY stage top size : 280 x 280 mm
Effective glass size : 180 x 180 mm
Max. stage loading : 10 kg
Max. workpiece height : 150 mm
Mass : 65,5 kg

Model	MF-UA1010D	MF-UB1010D	MF-UC1010D	MF-UD1010D
No.	**176-871-10**	**176-876-10**	**176-881-10**	**176-886-10**
Measurement system	X and Y axis (2 axes)	X, Y and Z axis (3 axes)	X and Y axis (2 axes)	X, Y and Z axis (3 axes)
Observation type	Bright Field (BF)	Bright Field (BF)	Bright/Dark Field (BF/DF)	Bright/Dark Field (BF/DF)

Model 2010D
XY stage travel range : 200 x 100 mm
Z-axis travel range : 150 mm
XY stage top size : 350 x 280 mm
Effective glass size : 250 x 150 mm
Max. stage loading : 10 kg
Max. workpiece height : 150 mm
Mass : 69,5 kg

Model	MF-UA2010D	MF-UB2010D	MF-UC2010D	MF-UD2010D
No.	**176-872-10**	**176-877-10**	**176-882-10**	**176-887-10**
Measurement system	X and Y axis (2 axes)	X, Y and Z axis (3 axes)	X and Y axis (2 axes)	X, Y and Z axis (3 axes)
Observation type	Bright Field (BF)	Bright Field (BF)	Bright/Dark Field (BF/DF)	Bright/Dark Field (BF/DF)

Optional accessories

No.	Description
375-054	Camera Adaptor, 0.5X incl. C-Mount
970441	Camera Adaptor, C-Mount
375-056	Calibration Micro Scale
172-378	Fixture/clamping material, V-block with clamp
176-305	Rotary Table, Type A, D=240 mm
176-306	Rotary Table, Type B, D=270 mm
264-155D	2D Data processor, QM-Data 200, stand type
12AAJ088	Footswitch
Bulbs	
12BAB345	Bulb, Halogen; 12V/50W (2 Pin Fitting)
517181	Bulb, Halogen, 12V/100W
12BAD602	Bulb, Halogen; 12V/100W
DIC Units	
378-076	DIC Unit, 100X, SL80X, SL50X
378-078	DIC Unit, 50X, SL20X
378-079	DIC Unit 20X
378-080	DIC Unit, 5X, 10X
Eyepieces	
378-857	Eyepiece, 15X/16
378-858	Eyepiece, 20X/12
Filters	
12AAA643	Illumination Filter ND2
12AAA644	Illumination Filter ND8
12AAA645	Illumination Filter GIF
12AAA646	Illumination Filter LB80
12AAG806	Illumination Filter GIF
12AAG807	Illumination Filter LB80
Lighting (required option)	
176-343D	Twin Fiber Illumination, for MF, MF-U
176-315D	Illumination Unit, 100W Fiber Optic
176-316D	Illumination Unit, 150 W Fiber Optic
176-448D	Illumination Unit, Halogen
Reticles	
12AAG876	Reticle for MF-U Gen. B, Broken Cross-hair (3 µm line width)
12AAG877	Reticle for MF-U Gen. B, Broken Cross-hair (5 µm line width)
12AAG878	Reticle for MF-U Gen. B, Broken Cross-hair (7 µm line width)
12AAG879	Reticle for MF-U Gen. B, Cross-hair and 45° Broken Lines
12AAG880	Reticle for MF-U Gen. B, Cross-hair and 60° Broken Lines
12AAG881	Reticle for MF-U Gen. B, Zeiss Type Pattern
Stands	
176-308	Vibration Isolator, Spring Pad
176-107	Fixture/clamping material, Holder with clamp
172-197	Fixture/clamping material Swivel center support
Turrets (required option)	
378-018	Turret, Manual (BF), 4 Pos.
378-216D	Turret, Motorized (BF), 5 Pos.
176-211	Turret for MF-U, Manual (BD), 4 Pos.
176-212D	Turret for MF-U, Motorized (BD), 4 Pos.

All products to be sold to commercial customers. Product illustrations are without obligation. Product descriptions, in particular any and all technical specifications, are only binding when explicitly agreed upon. For suggested retail prices, please refer to the separate price list.

Measuring Microscope MF-U Generation D Series

Series 176

Model 2017D

Model 3017D

Model 4020D

Model 2017D
XY stage travel range : 200 x 170 mm
Z-axis travel range : 220 mm
XY stage top size : 410 x 342 mm
Effective glass size : 270 x 240 mm
Swivelling function (left) : ±5°
Max. stage loading : 20 kg
Max. workpiece height : 220 mm
Mass : 130 kg

Model	MF-UA2017D	MF-UB2017D	MF-UC2017D	MF-UD2017D
No.	**176-873-10**	**176-878-10**	**176-883-10**	**176-888-10**
Measurement system	X and Y axis (2 axes)	X, Y and Z axis (3 axes)	X and Y axis (2 axes)	X, Y and Z axis (3 axes)
Observation type	Bright Field (BF)	Bright Field (BF)	Bright/Dark Field (BF/DF)	Bright/Dark Field (BF/DF)

Model 3017D
XY stage travel range : 300 x 170 mm
Z-axis travel range : 220 mm
XY stage top size : 510 x 342 mm
Effective glass size : 370 x 240 mm
Swivelling function (left) : ±5°
Max. stage loading : 20 kg
Max. workpiece height : 220 mm
Mass : 138 kg

Model	MF-UA3017D	MF-UB3017D	MF-UC3017D	MF-UD3017D
No.	**176-874-10**	**176-879-10**	**176-884-10**	**176-889-10**
Measurement system	X and Y axis (2 axes)	X, Y and Z axis (3 axes)	X and Y axis (2axes)	X, Y and Z axis (3 axes)
Observation type	Bright Field (BF)	Bright Field (BF)	Bright/Dark Field (BF/DF)	Bright/Dark Field (BF/DF)

Model 4020D
XY stage travel range : 400 x 200 mm
Z-axis travel range : 220 mm
XY stage top size : 610 x 342 mm
Effective glass size : 440 x 240 mm
Swivelling function (left) : ±3°
Max. stage loading : 15 kg
Max. workpiece height : 220 mm
Mass : 144 kg

Model	MF-UA4020D	MF-UB4020D	MF-UC4020D	MF-UD4020D
No.	**176-875-10**	**176-880-10**	**176-885-10**	**176-890-10**
Measurement system	X and Y axis (2 axes)	X, Y and Z axis (3 axes)	X and Y axis (2 axes)	X, Y and Z axis (3 axes)
Observation type	Bright Field (BF)	Bright Field (BF)	Bright/Dark Field (BF/DF)	Bright/Dark Field (BF/DF)

All products to be sold to commercial customers. Product illustrations are without obligation. Product descriptions, in particular any and all technical specifications, are only binding when explicitly agreed upon. For suggested retail prices, please refer to the separate price list.

Mitutoyo

Measuring Microscope MF-U Generation D Series

Series 176

MF-U Generation D Series: Models with motorized Z-axis movement
The MF-U Generation D version with a motorized Z-Axis. This feature renders fast and accurate Auto Focus possible when used in combination with the optional Vision Unit. The MF-U with motorized Z-axis is available in 3 stage sizes and incorporates all the functionality of the standard MF-U Generation D series.

The MF-U Generation D with motorized Z-axis offers you the following benefits:
- Auto Focus function when using the optional Vision Unit.
- A measuring accuracy that is one of the highest in its class.
- Proven high-NA objectives from the FS optical system (long working distance type).
- Integration of metallurgical and measurement microscope functions enabling you to make high-resolution observations and high-accuracy measurements.
- Illumination unit (reflected/transmitted) gives you the option of a high-intensity LED or halogen bulb.
- The variable aperture diaphragm (reflected/ transmitted) allows observation measurement while suppressing light diffraction.
- Variety of 3 standardized stages in sizes up to 400 × 200 mm.
- Quick-release mechanism enabling you to move the stage quickly when measuring large or numerous workpieces.
- High-magnification eyepiece observation up to 2000X.
- A large lineup of optional accessories - including a Vision Unit, various digital cameras or data management on a PC - grants a wide field of application and excellent measuring efficiency.

MF-UJ 2017D
(turret, objectives and illumination are optional)

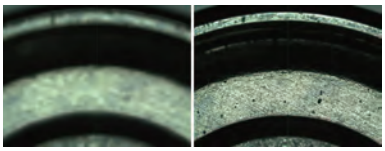

Screen image before and after Auto Focus*
*** When using optional Vision Unit**

Specifications

Observation image	Erect image
Optical tube	Siedentoph type (pupil distance adjustment : 51 - 76 mm), 1X tube lens, Binocular tube (depression : 30°), Reticle projection method, with TV mount, Optical path ratio (eyepiece/TV mount : 50/50)
Focusing method	Manual (coarse focusing : 10 mm/rev., fine focusing : 0,1 mm/rev.)
Indication accuracy (at 20°C)	XY-axis : (2,2+0,02L) µm Z-axis : (5+0,04L) µm L : Measuring length (mm) when not loaded, JIS B 7153
Floating function	X and Y axes with Quick-release mechanism
Power supply	220/240V AC, 50/60Hz
Eyepiece lens	10X (field No.: 24 mm) Optional : 15X, 20X
Turret (optional)	Manual or motorized
Objective lens (optional)	M / BD Plan Apo objective from 1X to 100X
Transmitted illumination optional	Light source : Halogen bulb (12V, 50W) Optical system : Telecentric illumination with adjustable aperture diaphragms Functions : Light intensity adjustable, Non-stepped brightness adjustment
Surface illumination optional	Light source : Optional halogen illumination unit (fiber-optic cold light illumination) Optical system : Koehler illumination with adjustable aperture diaphragms Functions : Light intensity adjustable, Non-stepped brightness adjustment
Display unit	Resolution: 0,001mm / 0,0005mm / 0,0001mm No. of axis : 2 axis or 3 axis Functions : Zero-setting, Direction switching, Data output (USB and RS-232C interface)
Remote Box	- Speed adjustment - Coarse/Fine Speed switching - Jog shuttle - Emergency stop switch - AF button - Counter reset button - Data output button - Power switch - Limit setting (Z-axis) Remote Box

Refer to the MF / MF-U microscopes brochure

All products to be sold to commercial customers. Product illustrations are without obligation. Product descriptions, in particular any and all technical specifications, are only binding when explicitly agreed upon. For suggested retail prices, please refer to the separate price list.

Measuring Microscope MF-U Generation D Series

Series 176

MF-U Generation D: Models with motorized Z-axis

1. Bright Field Observation

Model	MF-UJ2017D	MF-UJ3017D	MF-UJ4020D
No.	**176-894D**	**176-895D**	**176-896D**
XY stage travel range	200 x 170 mm	300 x 170 mm	400 x 200 mm
Effective glass size mm	270 x 240	370 x 240	440 x 240
Z-axis travel range mm	220	220	220
XY stage top size mm	410 x 342	510 x 342	610 x 342
Max. stage loading kg	20	20	15

2. Bright Field/ Dark Field Observation

Model	MF-UK2017D	MF-UK3017D	MF-UK4020D
No.	**176-897D**	**176-898D**	**176-899D**
XY stage travel range	200 x 170 mm	300 x 170 mm	400 x 200 mm
Effective glass size mm	270 x 240	370 x 240	440 x 240
Z-axis travel range mm	220	220	220
XY stage top size mm	410 x 342	510 x 342	610 x 342
Max. stage loading kg	20	20	15

Optional accessories

No.	Description
375-054	Camera Adaptor, 0.5X incl. C-Mount
970441	Camera Adaptor, C-Mount
375-056	Calibration Micro Scale
172-378	Fixture/clamping material, V-block with clamp
176-305	Rotary Table, Type A, D=240 mm
176-306	Rotary Table, Type B, D=270 mm
264-155D	2D Data processor, QM-Data 200, stand type
12AAJ088	Footswitch
Bulbs	
12BAB345	Bulb, Halogen; 12V/50W (2 Pin Fitting)
517181	Bulb, Halogen, 12V/100W
12BAD602	Bulb, Halogen; 12V/100W
DIC Units	
378-076	DIC Unit, 100X, SL80X, SL50X
378-078	DIC Unit, 50X, SL20X
378-079	DIC Unit 20X
378-080	DIC Unit, 5X, 10X
Eyepieces	
378-857	Eyepiece, 15X/16
378-858	Eyepiece, 20X/12
Filters	
12AAA643	Illumination Filter ND2
12AAA644	Illumination Filter ND8
12AAA645	Illumination Filter GIF
12AAA646	Illumination Filter LB80
12AAG806	Illumination Filter GIF
12AAG807	Illumination Filter LB80
Lighting (required option)	
176-343D	Twin Fiber Illumination, for MF, MF-U
176-315D	Illumination Unit, 100W Fiber Optic
176-316D	Illumination Unit, 150 W Fiber Optic
176-448D	Illumination Unit, Halogen
Reticles	
12AAG876	Reticle for MF-U Gen. B, Broken Cross-hair (3 µm line width)
12AAG877	Reticle for MF-U Gen. B, Broken Cross-hair (5 µm line width)
12AAG878	Reticle for MF-U Gen. B, Broken Cross-hair (7 µm line width)
12AAG879	Reticle for MF-U Gen. B, Cross-hair and 45° Broken Lines
12AAG880	Reticle for MF-U Gen. B, Cross-hair and 60° Broken Lines
12AAG881	Reticle for MF-U Gen. B, Zeiss Type Pattern
Stands	
176-308	Vibration Isolator, Spring Pad
176-107	Fixture/clamping material, Holder with clamp
172-197	Fixture/clamping material Swivel center support
Turrets (required option)	
378-018	Turret, Manual (BF), 4 Pos.
378-216D	Turret, Motorized (BF), 5 Pos.
176-211	Turret for MF-U, Manual (BD), 4 Pos.
176-212D	Turret for MF-U, Motorized (BD), 4 Pos.

All products to be sold to commercial customers. Product illustrations are without obligation. Product descriptions, in particular any and all technical specifications, are only binding when explicitly agreed upon. For suggested retail prices, please refer to the separate price list.

Mitutoyo

Measuring Microscope MF-U Generation D Series

Series 176

MF-U Generation D Series: Motor driven models
All the functionality of the manual MF-U Generation D Series enhanced with motor driven axes in X, Y and Z offers the best you can expect of a measuring microscope when efficiency and operability is concerned.

The MF-U Generation D Series offers you the following benefits:
- Motor driven axis enabling you to move the stage quickly and without fatigue, ideal for measuring large or numerous workpieces.
- Proven high NA objective lenses from the FS optical system (long working distance type).
- Focussing made easy when using the optional Vision Unit.
- Models with Laser Auto Focus have by standard tracking focus functionality.
- Measuring accuracy that is one of the highest in its class.
- Illumination unit (reflected/transmitted) gives you the option of a high-intensity LED or halogen bulb.
- The variable aperture diaphragm (reflected/ transmitted) allows observation measurement while suppressing light diffraction.
- Variety of standardized stages in sizes up to 400 × 200 mm.
- High-magnification eyepiece observation up to 2000X.
- A good choice of optional accessories, including a Vision Unit, digital cameras or data management on a PC, promises a wide field of application and excellent measuring efficiency.

MF-UG4020D

MF-UE2017D with LAF

1) **MF-U Generation D**
Bright Field Observation

Model	MF-UG2017D	MF-UG3017D	MF-UG4020D
No.	**176-784D**	**176-785D**	**176-786D**
XY stage travel range	200 x 170 mm	300 x 170 mm	400 x 200 mm
Effective glass size mm	270 x 240	370 x 240	440 x 240
Z-axis travel range mm	220	220	220
XY stage top size mm	410 x 342	510 x 342	610 x 342
Max. stage loading kg	20	20	15

2) **MF-U Generation D**
Bright Field/Dark Field Observation

Model	MF-UH2017D	MF-UH3017D	MF-UH4020D
No.	**176-787D**	**176-788D**	**176-789D**
XY stage travel range	200 x 170 mm	300 x 170 mm	400 x 200 mm
Effective glass size mm	270 x 240	370 x 240	440 x 240
Z-axis travel range mm	220	220	220
XY stage top size mm	410 x 342	510 x 342	610 x 342
Max. stage loading kg	20	20	15

Specifications

Observation image	Erect image

Refer to the MF / MF-U microscopes brochure
See Measuring Microscope MF-UC Series for optional accessories

All products to be sold to commercial customers. Product illustrations are without obligation. Product descriptions, in particular any and all technical specifications, are only binding when explicitly agreed upon. For suggested retail prices, please refer to the separate price list.

Measuring Microscope MF-U Generation D Series

3) **MF-U Generation D with Laser Auto Focus**
Bright Field Observation

Model	MF-UE2017D	MF-UE3017D	MF-UE4020D
No.	**176-790D**	**176-791D**	**176-792D**
XY stage travel range	200 x 170 mm	300 x 170 mm	400 x 200 mm
Effective glass size mm	270 x 240	370 x 240	440 x 240
Z-axis travel range mm	220	220	220
XY stage top size mm	410 x 342	510 x 342	610 x 342
Max. stage loading kg	20	20	15

4) **MF-U Generation D with Laser Auto Focus**
Bright Field/Dark Field Observation

Model	MF-UF2017D	MF-UF3017D	MF-UF4020D
No.	**176-793D**	**176-794D**	**176-795D**
XY stage travel range	200 x 170 mm	300 x 170 mm	400 x 200 mm
Effective glass size mm	270 x 240	370 x 240	440 x 240
Z-axis travel range mm	220	220	220
XY stage top size mm	410 x 342	510 x 342	610 x 342
Max. stage loading kg	20	20	15

Optional turrets
(Necessary option for MF-UD)

QM-Data 200

Vision Unit 10D

All products to be sold to commercial customers. Product illustrations are without obligation. Product descriptions, in particular any and all technical specifications, are only binding when explicitly agreed upon. For suggested retail prices, please refer to the separate price list.

Accessories for Measuring Microscope MF-U Generation D

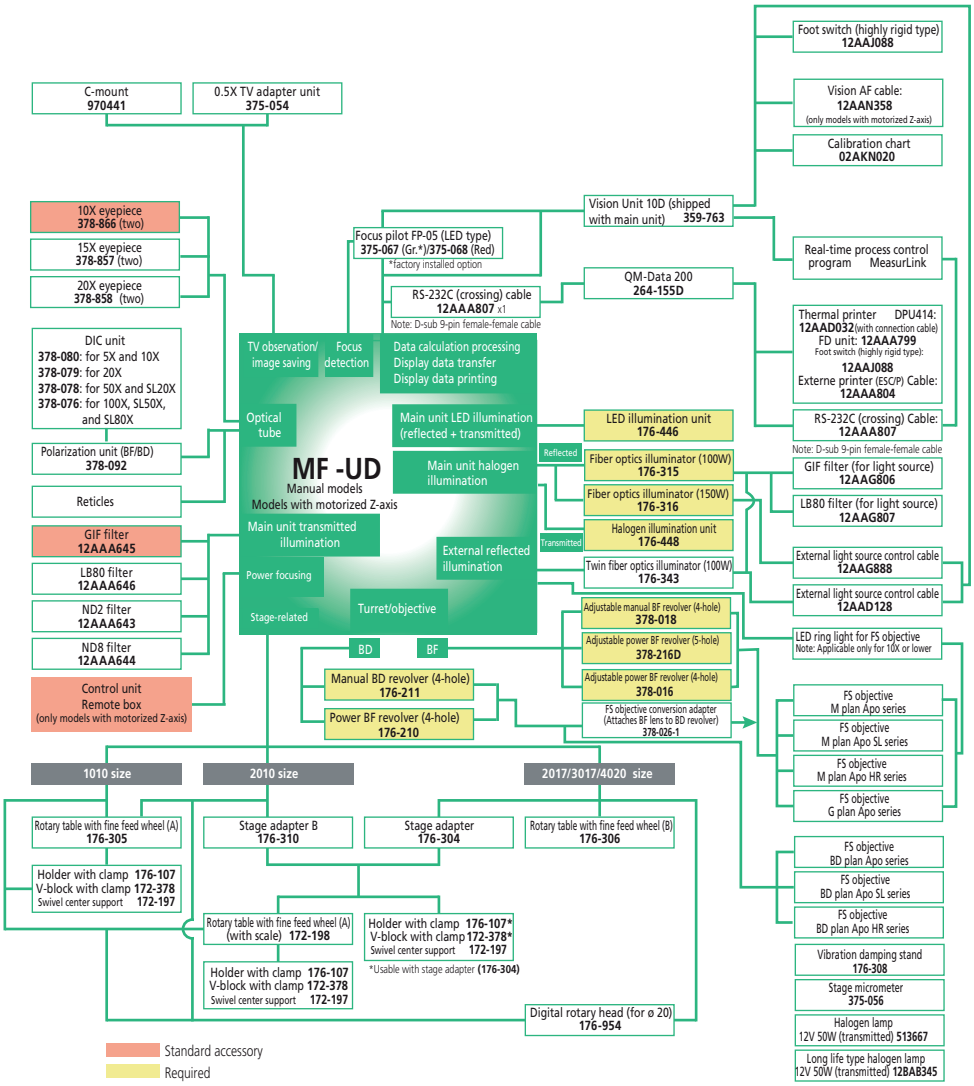

Optional accessories

No.	Description
375-054	Camera Adaptor, 0.5X incl. C-Mount
970441	Camera Adaptor, C-Mount
375-056	Calibration Micro Scale
172-378	Fixture/clamping material, V-block with clamp
176-305	Rotary Table, Type A, D=240 mm
176-306	Rotary Table, Type B, D=270 mm
12AAJ088	Footswitch
Bulbs	
12BAB345	Bulb, Halogen; 12V/50W (2 Pin Fitting)
517181	Bulb, Halogen, 12V/100W
12BAD602	Bulb, Halogen; 12V/100W
DIC Units	
378-076	DIC Unit, 100X, SL80X, SL50X
378-078	DIC Unit, 50X, SL20X
378-079	DIC Unit 20X
378-080	DIC Unit, 5X, 10X
Eyepieces	
378-857	Eyepiece, 15X/16
378-858	Eyepiece, 20X/12
Filters	
12AAA643	Illumination Filter ND2
12AAA644	Illumination Filter ND8
12AAA645	Illumination Filter GIF
12AAA646	Illumination Filter LB80
12AAG807	Illumination Filter LB80
12AAG806	Illumination Filter GIF
Lighting	
176-343D	Twin Fiber Illumination, for MF, MF-U
176-315D	Illumination Unit, 100W Fiber Optic
176-316D	Illumination Unit, 150 W Fiber Optic
176-448D	Illumination Unit, Halogen
Reticles	
12AAG876	Reticle for MF-U Gen. B, Broken Cross-hair (3 µm line width)
12AAG877	Reticle for MF-U Gen. B, Broken Cross-hair (5 µm line width)
12AAG878	Reticle for MF-U Gen. B, Broken Cross-hair (7 µm line width)
12AAG879	Reticle for MF-U Gen. B, Cross-hair and 45° Broken Lines
12AAG880	Reticle for MF-U Gen. B, Cross-hair and 60° Broken Lines
12AAG881	Reticle for MF-U Gen. B, Zeiss Type Pattern
Stands	
176-308	Vibration Isolator, Spring Pad
Turrets (required option)	
378-018	Turret, Manual (BF), 4 Pos.
378-216D	Turret, Motorized (BF), 5 Pos.
176-211	Turret for MF-U, Manual (BD), 4 Pos.
176-212D	Turret for MF-U, Motorized (BD), 4 Pos.
378-016D	Turret, Motorized (BF), 4 Pos.
Workpiece Fixture	
176-107	Fixture/clamping material, Holder with clamp
172-197	Fixture/clamping material Swivel center support

All products to be sold to commercial customers. Product illustrations are without obligation. Product descriptions, in particular any and all technical specifications, are only binding when explicitly agreed upon. For suggested retail prices, please refer to the separate price list.

Accessories for Measuring Microscope MF-U Generation D

Series 176

Accessories/system diagram for MF-U motor driven models

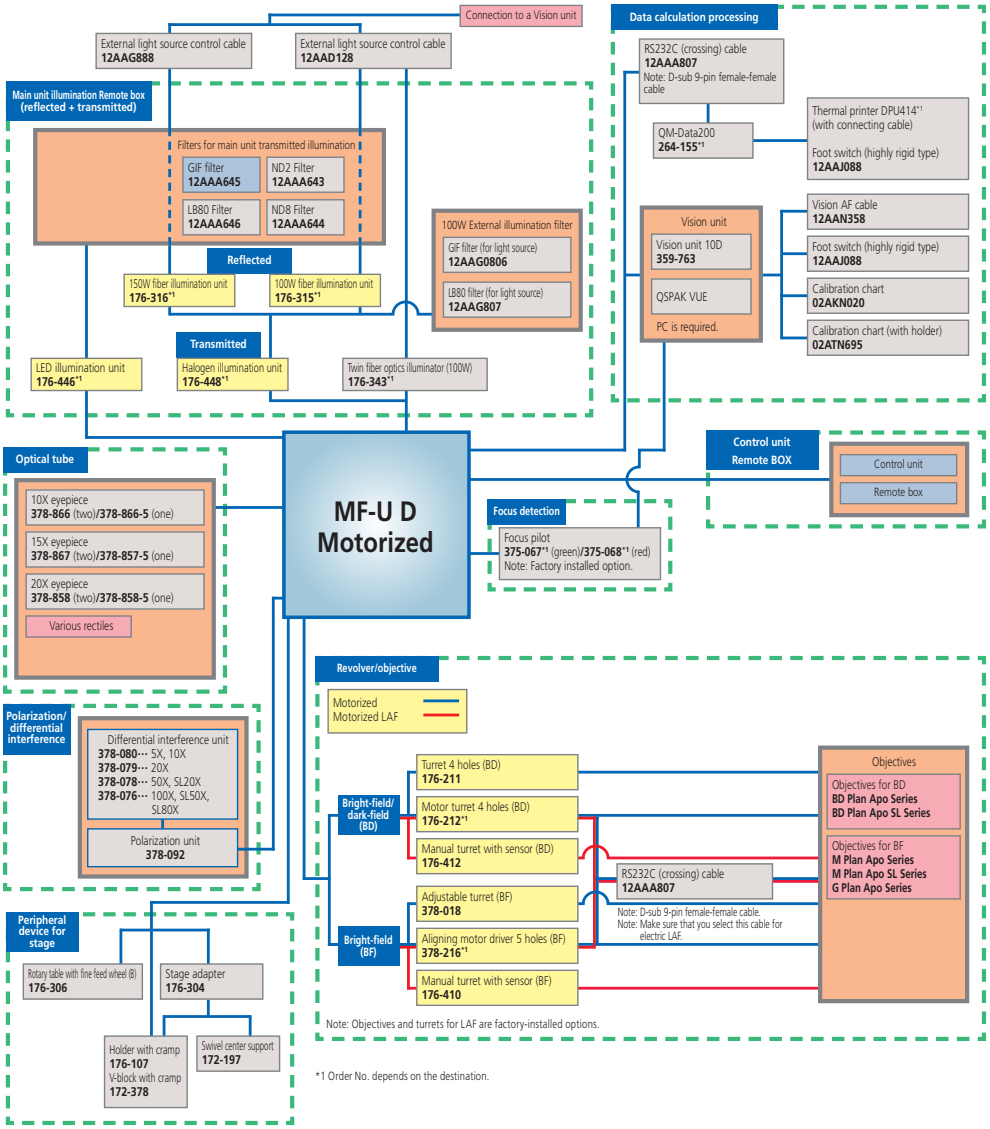

All products to be sold to commercial customers. Product illustrations are without obligation. Product descriptions, in particular any and all technical specifications, are only binding when explicitly agreed upon. For suggested retail prices, please refer to the separate price list.

Mitutoyo

Optional Light Sources for Measuring Microscopes MF/MF-U Generation D

Series 176

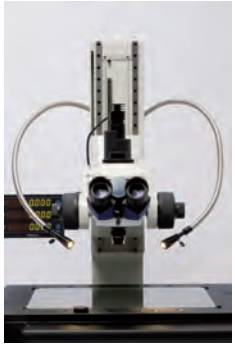

Dual Swan-neck Light-pipe

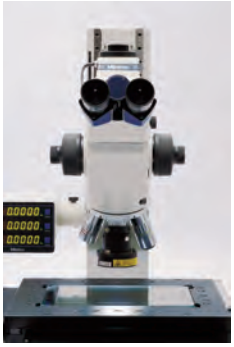

LED Ring Light
(for FS Objective lenses)

Dual Swan-neck Light-pipe illuminator
Applicable microscopes : MF, MF-U models
Length of fibre cable : 700 mm
Light source : Halogen bulb (12V, 100W) **(517181 : halogen bulb)**
Dimensions : Light unit 235 x 76 x 120 mm

No.
176-343D

Fibre-optic Ring Light
Applicable microscopes : MF models
Length of fibre cable : 1000 mm
Light source : Halogen bulb (12V, 100W) **(517181 : halogen bulb)**
Dimensions : Light unit 235 x 76 x 120 mm

No.
176-366CED

LED Ring Light
Applicable microscopes : MF models with 1X, 3X, 5X, 10X objective
Light source : White LED
Length of LED cable : 1500 mm

No.
176-367-2D

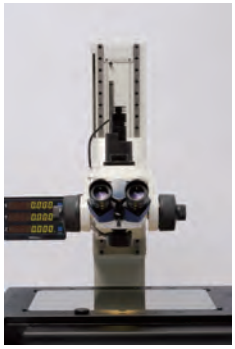

Fibre-optic Ring Light

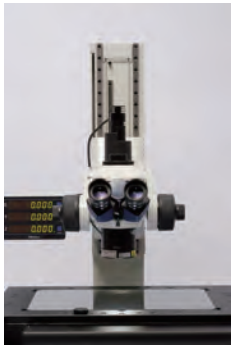

LED Ring Light

Dual Swan-neck Light-pipe

Fibre-optic Ring Light

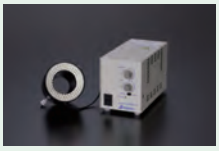

LED Ring Light

All products to be sold to commercial customers. Product illustrations are without obligation. Product descriptions, in particular any and all technical specifications, are only binding when explicitly agreed upon. For suggested retail prices, please refer to the separate price list.

Accessories for MF/MF-U Generation D

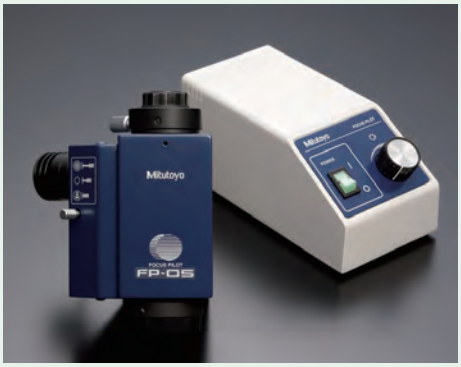

Focus Pilot is factory set option

Manual and Power Turrets

Stage Micrometer
375-056

Focus Pilot FP-05 /FP-05U

By installing this system on the camera mount of an MF series measuring microscope and projecting the focusing chart onto the workpiece surface, you can detect the focal point with high accuracy and high repeatability.

The Focus Pilot FP-05 / FP-05U offers you the following benefits:

- You can easily adjust the brightness of the image.
- You can achieve a wide view field observation on the monitor using a CCD camera (a C-mount adapter is included).
- You are offered a choice of four chart patterns, so you can select the pattern that works best with your workpiece surface texture type.

Concentric circle Slit

Focus Pilot

Magnification : 0,5X, Accuracy : 0,1% (within 2/3 area from the centre of field of view)
Camera adapter : C-mount (provided)
Applicable CCD camera : Up to 2/3-inch / **16,9 mm**
Mass : 1,8 kg

No.	Model	Light source
375-057D	MF	Green LED
375-058D	MF	Red LED
375-067D	MF-U	Green LED
375-068D	MF-U	Red LED

Manual Turrets for MF-U

No.	Remarks	Objective lens
176-211	4 Mounts	Bright Field / Dark Field
378-018	4 Mounts	Bright Field

Power Turrets for MF-U

Power supply : 240V AC, 50/60 Hz
Dimensions : Turret : 164 x 65 x 137 mm
Control Box : 108 x 72 x 193 mm

No.	Remarks	Objective lens
176-212D	4 Mounts	Bright Field / Dark Field
378-016D	4 Mounts	Bright Field
378-216D	5 Mounts	Bright Field

Stage Micrometer

No.	Range [mm]	Accuracy	Mass [g]
375-056	1	(1+L) µm L : Measuring length (mm)	16

All products to be sold to commercial customers. Product illustrations are without obligation. Product descriptions, in particular any and all technical specifications, are only binding when explicitly agreed upon. For suggested retail prices, please refer to the separate price list.

Measuring Microscope Hyper MF/MF-U Generation B Series

Series 176

This measuring microscope has one of the highest XY measuring accuracies at 0,9+3L/1000 µm.
The Hyper MF-B/MF-UB offers you the following benefits:

- One of the highest XY measuring accuracies in the world (0,9+3L/1000)[1] µm
- Selectable LAF (Laser Auto Focus) function.
- High operability and repeatability.
- Three-axis motorized control.
- You are offered the power-drive auto focus unit as standard.
- A range of useful fixtures is available that includes a wafer holder and swivel-centre support.

1. (**L** = measured length (mm) in XY plane, stage unloaded).

Hyper MF-UF2515B
with optional turret and objective lenses

Measuring unit : Linear encoder
Resolution : 0,01 µm
Max. workpiece height : 150 mm

Model	Hyper MF-B2515B	Hyper MF-UB2515B	Hyper MF-UD2515B	Hyper MF-UE2515B	Hyper MF-UF2515B
No.	**176-430D**	**176-431D**	**176-432D**	**176-433D**	**176-434D**
Laser auto focus function	-	-	-	Available	Available
XY stage travel range	250 x 150 mm	250 x 150 mm	250 x 150 mm	250 x 150 mm	250 x 150 mm
Effective glass size mm	300 x 200	300 x 200	300 x 200	300 x 200	300 x 200
Observation type	Bright Field	Bright Field	Bright Field or Bright Field/Dark Field	Bright Field	Bright Field or Bright Field/Dark Field
XY stage top size mm	460 x 350	460 x 350	460 x 350	460 x 350	460 x 350
Max. stage loading kg	30	30	30	30	30
Mass	14 kg (power unit) **Hyper MF** : 250 kg (main unit) **Hyper MF-U** : 255 kg (main unit)	14 kg (power unit) **Hyper MF** : 250 kg (main unit) **Hyper MF-U** : 255 kg (main unit)	14 kg (power unit) **Hyper MF** : 250 kg (main unit) **Hyper MF-U** : 255 kg (main unit)	14 kg (power unit) **Hyper MF** : 250 kg (main unit) **Hyper MF-U** : 255 kg (main unit)	14 kg (power unit) **Hyper MF** : 250 kg (main unit) **Hyper MF-U** : 255 kg (main unit)

Specifications

Observation image	Erect image
Optical tube	Reticle projection method, with TV mount, Optical path ratio **Hyper MF** : Monocular or binocular tube (optional depression : 25°) **Hyper MF-U** : Siedentoph type (pupil distance adjustment : 51 - 76 mm), 1X tube lens, Binocular tube (depression : 25°)
Eyepiece	**Hyper MF** : Optional 10X, 15X, 20X **Hyper MF-U** : 10X (field No. : 24 mm), Optional : 15X, 20X
Turret (optional)	**Hyper MF-U** : Motorized Objective (optional) : M / BD Plan Apo objective from 1X to 100X
Transmitted illumination	Light source : Halogen bulb (12V, 100W)**(fiber-optic cold light illumination)** **Optical system : Telecentric illumination with adjustable aperture diaphragms** **Functions : Light intensity adjustable, 100 steps brightness adjustment**
Surface illumination	Light source : Halogen bulb (12V, 50W) Optical system : Koehler illumination with adjustable aperture diaphragms Functions : Light intensity adjustable, 100 steps brightness adjustment
Dimensions (WxDxH)	160 x 476 x 381 mm (power unit) **Hyper MF** : 880 x 913 x 730 mm (main unit) **Hyper MF-U** : 880 x 913 x 770 mm (main unit) mm
Data output	Via RS-232C interface
Power supply	220/240V AC, 50/60 Hz
Optional Accessories	See MF accessories for Hyper MF or MF-U models

Control panel for fast traverse and three-axis positioning

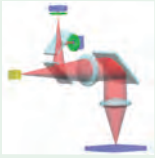

Laser Auto Focus Optical Tube

Refer to the Hyper MF / MF-U brochure

All products to be sold to commercial customers. Product illustrations are without obligation. Product descriptions, in particular any and all technical specifications, are only binding when explicitly agreed upon. For suggested retail prices, please refer to the separate price list.

Measuring Microscope Hyper MF/MF-U Generation B Series

Series 176

Optional accessories

No.	Description
264-159D	2D Data processor, QM-Data 200 for Hyper MF

See MF accessories for Hyper MF models or MF-U accessories for Hyper MF-U models

mm

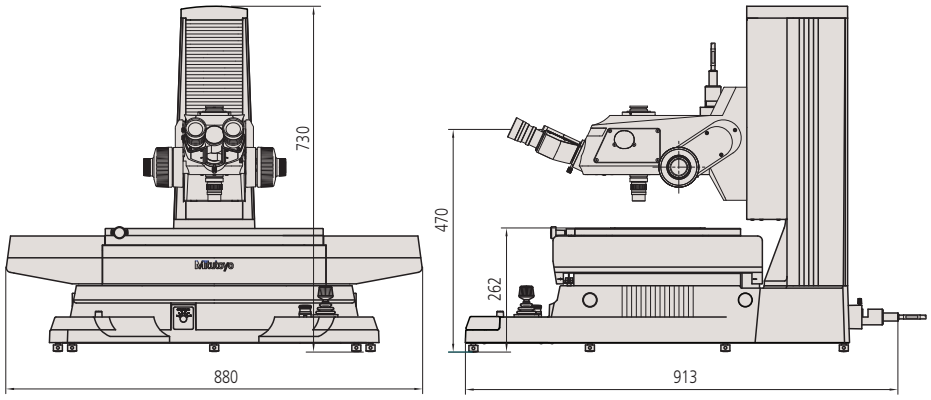

Hyper MF-B2515B

mm

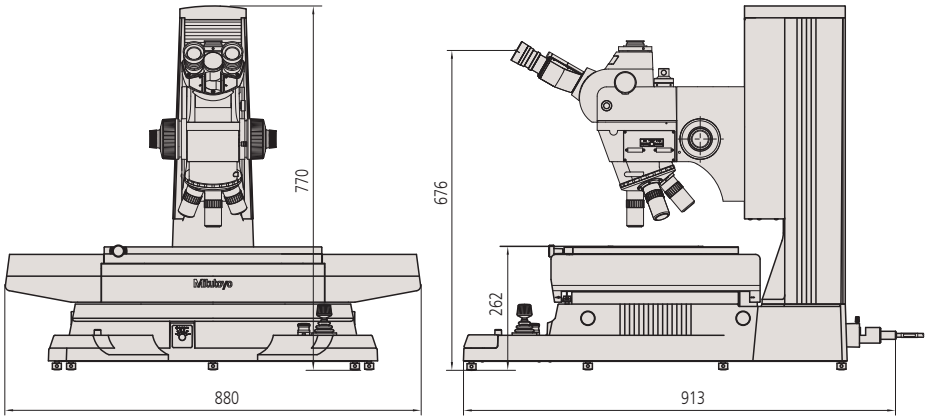

Hyper MF-UB2515B

QM-Data 200
2-D data processing unit

Vision Unit
PC-based vision measuring system

All products to be sold to commercial customers. Product illustrations are without obligation. Product descriptions, in particular any and all technical specifications, are only binding when explicitly agreed upon. For suggested retail prices, please refer to the separate price list.

Vision Unit

Series 359

This vision system retrofit for microscopes allows you to complete your measurement in one easy step with its automatic edge-detection tools and various macro icons.
The Vision Unit offers you the following benefits:

- Easy operation due to the graphics and measurement navigation functions.
- Image data input/storage function.
- Measurement results are output to Microsoft® Excel®; this lets you generate an inspection table on the same computer.
- The unit allows you to verify that measurement results are within the tolerance zones and to carry out various types of statistical processing for each item.
- Combined use with the focus pilot gives you high accuracy in height measurements (patent pending).
- You can perform a series of measuring operations using just one screen display.
- The auto-brightness control function reproduces type and degree of illumination used.

The PC system, QSPAK VUE software and microscope are optional.

No.	Model	Description
359-763	Vision Unit 10D	For MF-D / MF-UD generation manual and motorized models
359-727	Vision Unt 9D	For MF-C generation
359-729	Vision Unit 9UD	For MF-UC generation
359-717	Vision Unit 8D	For MF-B generation
359-719	Vision Unit 8UD	For MF-UB generation
359-779	Vision Unit 7D	For Hyper MF-B / Hyper MF-UB generation
359-707	Vision Unit 6D	For MF-A generation
359-709	Vision Unit 6UD	For MF-UA generation

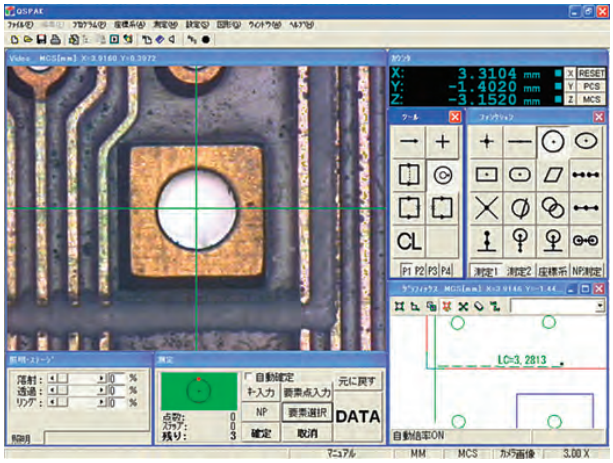

QSPAK VUE Measurement Window

Specifications

Projected image	Inverted
Camera unit	Image sensor : 1/2" / **12,7 mm** color CMOS camera Dimensions : 100 x 58 x 89 mm (W x D x H) Mass : 0,4 kg
Adapter unit	Operating software : QSPAK VUE (optional) Dimensions : 45 x 123 mm Magnification : 0,5X Mass : 0,3 kg
Magnification	19X - 1900X on 22" / **56 cm** monitor (image resizable)
QSPAK VUE, optional software	**For observation/comparison of form** - Template matching function - Manual pattern matching function **For simple measurement** - One-click edge detection tool function - Smart tool function - User macro function **Functions for repeated measurement/auto-measurement** - Quick navigation - Playback - Graphic - External data output - Statistical calculation

Standard accessories

No.	Description
12AAJ088	Footswitch

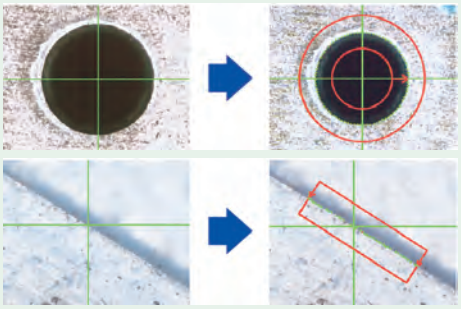

One-click Edge Detection
Just by clicking the mouse near the edge of a workpiece, QSPAK automatically scans the edge and detects it, showing its coordinates. This function also works with the point tool, box tool, circle tool and auto-focus tool.

Graphic Window
The measurement results and measured elements are plotted in the graphic window in real-time. By using this function the user can check the current measuring position at a glance. The graphic window can be used for geometrical calculations.

All products to be sold to commercial customers. Product illustrations are without obligation. Product descriptions, in particular any and all technical specifications, are only binding when explicitly agreed upon. For suggested retail prices, please refer to the separate price list.

Microscope Unit FS70 Series

Series 378 - Microscope Unit for Semiconductor Inspection

- Excellent operability with the inward rotating turret and high quality objective lenses with long working distance.
- Ideal as the microscope unit of a prober station for semiconductors.
- The L- and L4-models support YAG laser wavelength ranges from 266 up to 1064 nm allowing laser cutting of thin films and liquid crystal substrates.
- Ergonomic design with combined knob for coarse- and enlarged fine focus adjustment.

Specifications

Focus adjustment	**Method :** With concentric coarse and fine focusing wheels (right and left) **Range :** 50mm travel range, 0,1mm/rev. for fine adjustment, 3,8mm/rev. for coarse adjustment
Trinocular tube Image	Erect image
Interpupillary distance	Siedentopf type, adjustment range : 51-76mm
Field number	24
Tilt angle	0°- 20° (only - TH, - THS models)
Illumination system	Reflective illumination for bright field (Koehler illumination, with aperture diaphragm)
Light source	12 V / 100 W fibre-optic, non-stopped adjustment, light guide length 1,5m, power consumption 150W
Objective lens (optional)	M Plan Apo, M Plan Apo SL, G Plan Apo
FS-70L/L4	• The FS70L supports three YAG laser wavelengths (1064 nm, 532 nm and 355 nm), while the FS70L4 supports two wavelengths (532 nm and 266 nm), thus expanding the scope of laser applications, allowing laser-cutting of thin-films used in semiconductors and liquid crystal substrates. However, Mitutoyo assumes no responsibility whatever for the performance and/or safety of the laser system used with Mitutoyo microscopes. A careful examination is recommended when selecting a laser-emission unit. • Bright field, Differential Interference Contrast (DIC) and polarized observations are standard with the FS70Z. The FS70L and FS70L4 do not support the DIC method. • By employing an inward-leaning turret, the long working distance objectives provide excellent operability.

Refer to the Microscope Units and objective lenses brochure

FS70Z

FS70L

FS70L4

Model	FS70	FS70-TH	FS70Z	FS70Z-TH
No.	**378-184-1**	**378-184-3**	**378-185-1**	**378-185-3**
Model short base	FS70-S	FS70-THS	FS70Z-S	FS70Z-THS
Order No. short base model	**378-184-2**	**378-184-4**	**378-185-2**	**378-185-4**
Optical pass ratio	50/50	50/50	50/50	50/50
Tube lens	1X	1X	1X, 2X zoom	1X, 2X zoom
Camera mount	C-mount (using optional adapter B)	C-mount (using optional adapter B)	C-mount (using optional adapter B)	C-mount (using optional adapter B)
Loading (*1) kg	14,5	13,6	14,1	13,2
Mass kg	6,1	7,1	6,6	7,5

(*1) Loading on optical tube excluding weight of objective lenses and eyepieces.

Model	FS70L	FS70L-TH	FS70L4	FS70L4-TH
No.	**378-186-1**	**378-186-3**	**378-187-1**	**378-187-3**
Model short base	FS70L-S	FS-70L-THS	FS70L4-S	FS70L4-THS
Order No. short base model	**378-186-2**	**378-186-4**	**378-187-2**	**378-187-4**
Optical pass ratio	100/0 or 0/100	100/0 or 0/100	100/0 or 0/100	100/0 or 0/100
Protective filter	Built-in laser beam filter	Built-in laser beam filter	Built-in laser beam filter	Built-in laser beam filter
Tube lens	1X	1X	1X	1X
Applicable laser	1064/532//355 nm	1064/532/355 nm	532/266 nm	532/266 nm
Camera mount	Use a laser with TV port.	Use a laser with TV port.	C-mount receptacle (with green filter switch)	C-mount receptacle (with green filter switch)
Objective, optional (for laser-cutting)	M/LCD Plan NIR M/LCD Plan NUV	M/LCD Plan NIR M/LCD Plan NUV	M Plan UV	M Plan UV
Loading (*1) kg	14,2	13,5	13,9	13,1
Mass kg	6,4	7,2	6,7	7,5

(*1) Loading on optical tube excluding weight of objective lenses and eyepieces.

All products to be sold to commercial customers. Product illustrations are without obligation. Product descriptions, in particular any and all technical specifications, are only binding when explicitly agreed upon. For suggested retail prices, please refer to the separate price list.

Mitutoyo

Video Microscope Unit VMU Series

Series 378

The VMU is a compact, lightweight and easy-to-install microscope unit for CCD camera monitoring in semiconductor fabrication facilities.
The VMU offers you the following benefits:

- The optical system features ultra-long working distance objectives and correction for the wide range of radiation wavelengths in use.
- Reflected illumination keeps your workpiece free from thermal expansion (the fibreoptic illuminator is required.)
- Also available with a laser mount or turret (objective mount).

VMU-V
378-505

VMU-H
378-506

VMU-LB
378-513

VMU-L4B
378-514

Selection Guide to System Configuration
(Depends on each system configuration)

No.	Applicable Wavelength	Vertical CCD camera mount	Horizontal CCD camera mount	YAG laser mount	Fibre optic illumination unit mount	Mass [g]
378-505	Near-infrared and visible radiation	Yes			Yes	570
378-506	Near-infrared and visible radiation		Yes		Yes	590
378-513	Near-infrared, visible, near-ultraviolet radiation	Yes		Yes	Yes	1270
378-514	Near infrared, visible, near ultraviolet and ultraviolet radiation	Yes		Yes	Yes	1300

Specifications

Magnification of tube	1X
Reflected illumination	- Telecentric system with aperture stop system - Fibre-optic illuminator (optional) is required
Light source	Halogen bulb (21V, 150W) (optional)
Objective lenses for bright field observation (Optional accessory)	M Plan Apo, M Plan Apo SL, G Plan Apo
Objective lenses for laser cutting (Optional accessory)	M plan Apo NIR, LCD Plan Apo NIR, M Plan Apo NUV and LCD Plan Apo NUV
Objective lenses for laser machining (Optional accessory)	M Plan UV **(for 378-514 only)**

Refer to the microscope units and objective lenses brochure

All products to be sold to commercial customers. Product illustrations are without obligation. Product descriptions, in particular any and all technical specifications, are only binding when explicitly agreed upon. For suggested retail prices, please refer to the separate price list.

Video Microscope Unit VMU Series

Refer to the microscope units and objective lenses brochure

Series 378

The WIDE VMU series takes video microscopy to the next level with a 7 times bigger field of view than conventional models. It supports both bright field and dark field observation.

The WIDE VMU offers the following benefits:
- Supported sensor size of 2-inch-equivalent, APS-C format
- Image field of ø30 mm with 1X tube lens
- Both F-mount and C-mount cameras can be mounted
- BF observations are supported by the WIDE VMU-V and -H models ,
- BD observations are supported by the WIDE VMU-BDV and -BDH models
- With the flexible orientation for camera and illumination mounting very compact arrangements can be configured.

WIDE VMU-V

WIDE VMU-H

WIDE VMU-BDV

WIDE VMU-BDH

Highly compact configuration of 4 WIDE VMU units

No.	Camera mount	Observation type	Illumination mount	Suitable objectives
378-515	Vertical	Bright field (BF)	Single port	M Plan Apo, M Plan Apo HR, M Plan Apo SL, G Plan Apo
378-516	Horizontal	Bright field (BF)	Single port	M Plan Apo, M Plan Apo HR, M Plan Apo SL, G Plan Apo
378-517	Vertical	Bright field / Dark field (BD)	Dual port	BD Plan Apo, BD Plan Apo HR, BD Plan Apo SL
378-518	Horizontal	Bright field / Dark field (BD)	Dual port	BD Plan Apo, BD Plan Apo HR, BD Plan Apo SL

Optional accessories: Motorized turret, focusing unit, polarizer

All products to be sold to commercial customers. Product illustrations are without obligation. Product descriptions, in particular any and all technical specifications, are only binding when explicitly agreed upon. For suggested retail prices, please refer to the separate price list.

Wide Field Eyepiece WF

Series 378

- Extra-wide field of view type.
- Optional reticles are available.
- Applicable microscope models: MF-C, MF-UC, Hyper MF, Hyper MF-U, FS70.

378-856-5

378-857-5

378-858-5

Individual

No.	Magnification	Field number	Correction range	Eye point	Mass [g]
378-856-5	10X	24	-10D to +5D	High	85
378-857-5	15X	16	-8D to +5D	Normal	40
378-858-5	20X	12	-8D to +5D	Normal	55

Two-piece sets

No.	Magnification	Field number	Correction range	Eye point	Mass [g]
378-856	10X	24	-10D bis +5D	High	85
378-857	15X	16	-8D to +5D	Normal	40
378-858	20X	12	-8D to +5D	Normal	55

Optional accessories

No.	Description
516848	Reticle, Cross hair
516576	Reticle, Broken Cross hair and 60° Angle
516578	Reticle, Concentric Circles
516577	Reticle, Cross hair with 20 mm Scale
516849	Reticle, 10 mm Scale (0,01 mm Reading)
516850	Reticle, 5 mm Scale (0,005 mm Reading)

Refer to the microscope units and objective lenses brochure

Finity Corrected Objective Lens ML-Series

Series 375

The Mitutoyo 375 Series finity corrected objective lenses realize clear images and long working distance.

No.	Magnification	N.A.	W.D.	D.F.
375-036-2	1X	0,03	61 mm	306 µm
375-037-1	3X	0,09	77 mm	34 µm
375-034-1	5X	0,13	61 mm	23 µm
375-039	10X	0,21	51 mm	6,2 µm
375-051	20X	0,42	20 mm	1,6 µm
375-052	50X	0,55	13 mm	0,9 µm
375-053	100X	0,7	6 mm	0,6 µm

Specifications

Abbreviations in product table	Mag. : Magnification N.A. : Numerical aperture W.D. : Working distance D.F. : Focal depth

All products to be sold to commercial customers. Product illustrations are without obligation. Product descriptions, in particular any and all technical specifications, are only binding when explicitly agreed upon. For suggested retail prices, please refer to the separate price list.

Objective Lens M Plan Series

Specifications

Features

- The long working distance type objective lenses provide excellent clearance between the lens surface and the workpiece surface in focus, making it possible to observe workpieces which are usually hard-to-focus because of awkward projections.

- The metallurgical plan apochromatic (M Plan Apo) objective lens is an excellent optical system. This objective provides a flat, chromatic aberration-free image throughout the field of view, making it is suitable for any type of microscope.

- Specially designed objective lenses are also available with correction for the near-infrared, near-ultraviolet and ultraviolet regions of the spectrum, or various thicknesses of LCD screen glass.

- The mounting screw threads of objective lenses are designed to conform to JIS B-7141-1994.

Refer to the microscope units and objective lenses brochure

Series 378

The Mitutoyo 378 Series objectives have one of the world's longest working distances and an infinitycorrection optical system. These objectives give you flexible observation at high magnifications and independent correction of chromatic aberration.

M Plan Apo and M Plan Apo SL
Objectives for bright field observation

BD Plan Apo and BD Plan Apo SL
Objectives for bright/dark field observation

Near-ultraviolet wavelength corrected M Plan Apo NUV objectives

Ultraviolet wavelength corrected M Plan UV objectives

Near-infrared wavelength corrected M Plan Apo NIR objectives

All products to be sold to commercial customers. Product illustrations are without obligation. Product descriptions, in particular any and all technical specifications, are only binding when explicitly agreed upon. For suggested retail prices, please refer to the separate price list.

Mitutoyo

Objective Lens for Brightfield Observations FS-Series

Series 378

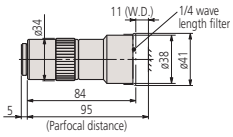

378-800-3

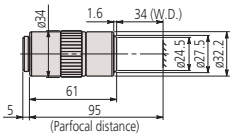

378-801-6

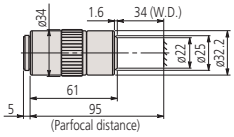

378-802-6

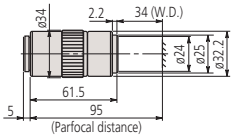

378-803-3

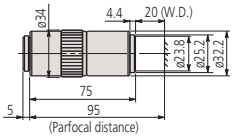

378-804-3

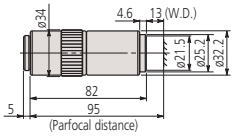

378-805-3

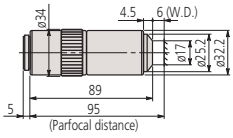

378-806-3

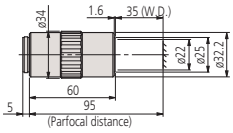

378-807-3

M Plan Apo for Bright Field Observation

Compatible with microscope types VMU / FS-70 / MF-U / Hyper MF-U
Note : Polarizing unit **(378-074)** is required when using 1X objective.

No.	Magnification	N.A.	W.D.	f	R	D.F.	F.O.V. 1	F.O.V. 2	Mass [g]
378-800-3	1X	0,025	11 mm	200	11 µm	440 µm	ø24 mm	4,8x6,4 mm	300
378-801-6	2X	0,055	34 mm	100	5 µm	91 µm	ø12 mm	2,4x3,2 mm	220
378-802-6	5X	0,14	34 mm	40	2 µm	14 µm	ø4,8 mm	0,96x1,28 mm	240
378-807-3	7,5X	0,21	35 mm	26,67	1,3 µm	6,2 µm	ø3,6 mm	0,64x0,85 mm	240
378-803-3	10X	0,28	34 mm	20	1 µm	3,5 µm	ø2,4 mm	0,48x0,64 mm	230
378-804-3	20X	0,42	20 mm	10	0,7 µm	1,6 µm	ø1,2 mm	0,24x0,32 mm	270
378-805-3	50X	0,55	13 mm	4	0,5 µm	0,9 µm	ø0,48 mm	0,1x0,13 mm	290
378-806-3	100X	0,7	6 mm	2	0,4	0,6 µm	ø0,24 mm	0,05x0,06 mm	320

M Plan Apo SL for Bright Field Observation

Compatible with microscope types VMU / FS-70 / MF-U / Hyper MF-U
Note : These objectives offer extra-long working distance.

No.	Magnification	N.A.	W.D.	f	R	D.F.	F.O.V. 1	F.O.V. 2	Mass [g]
378-810-3	20X	0,28	30,5mm	10	1µm	3,5µm	ø1,2 mm	0,24x0,32mm	240
378-811-3	50X	0,42	20,5 mm	4	0,7 µm	1,6 µm	ø0,48 mm	0,1x0,13 mm	280
378-812-3	80X	0,5	15 mm	2,5	0,6 µm	1,1 µm	ø0,3 mm	0,06x0,08 mm	280
378-813-3	100X	0,55	13 mm	2	0,5 µm	0,9 µm	ø0,24 mm	0,05x0,06 mm	290
378-816-3	200X	0,62	13 mm	1	0,4 µm	0,7 µm	ø0,12 mm	0,025x0,03 mm	490

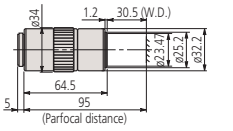

378-810-3

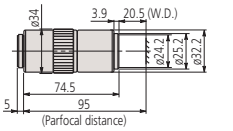

378-811-3

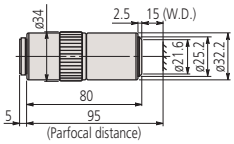

378-812-3

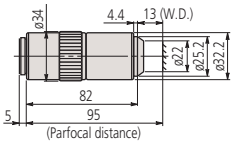

378-813-3

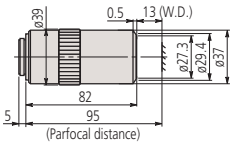

378-816-3

Specifications

Abbreviations in product table	Mag. : Magnification N.A. : Numerical aperture W.D. : Working distance f : Focal distance R : Resolving power D.F. : Focal depth F.O.V. 1 : Field of view when using ø24 mm eyepiece F.O.V. 2 : Field of view when using a digital camera with 1/2" / **12,7 mm** chip size

Refer to the microscope units and objective lenses brochure

All products to be sold to commercial customers. Product illustrations are without obligation. Product descriptions, in particular any and all technical specifications, are only binding when explicitly agreed upon. For suggested retail prices, please refer to the separate price list.

Objective Lens for Brightfield Observations FS-Series

Specifications

Abbreviations in product table

Mag. : Magnification
N.A. : Numerical aperture
W.D. : Working distance
f : Focal distance
R : Resolving power
D.F. : Focal depth
F.O.V. 1 : Field of view when using ø24 mm eyepiece
F.O.V. 2 : Field of view when using a digital camera with 1/2" / **12,7 mm** chip size

Refer to the microscope units and objective lenses brochure

Series 378

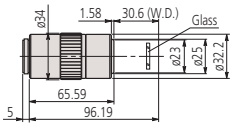

378-847

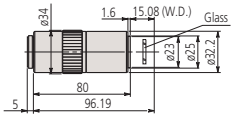

378-848-3

Glass Thickness Corrected
G Plan Apo for Bright Field Observation
Compatible with microscope types VMU / FS-70 / MF-U / Hyper MF-U
Note : The G Plan Apo Series are designed for observing a workpiece through glass (thickness : 3,5 mm).

No.	Magnification	N.A.	W.D.	f	R	D.F.	F.O.V. 1	F.O.V. 2	Mass [g]
378-847	20X	0,28	29,42 mm	10	1 µm	3,5 µm	ø1,2 mm	0,24x0,32 mm	270
378-848-3	50X	0,5	13,89 mm	4	0,6 µm	1,1 µm	ø0,48 mm	0,1x0,13 mm	320

M Plan Apo HR for Bright Field Observation
Compatible with microscope types VMU / FS-70 / MF-U / Hyper MF-U
Note : These objectives offer extra-high resolving power.

No.	Magnification	N.A.	W.D.	f	R	D.F.	F.O.V. 1	F.O.V. 2	Mass [g]
378-787-4	5X	0,21	25,5 mm	40	1,3 µm	6,2 µm	ø4,8 mm	0,96x1,28 mm	285
378-788-4	10X	0,42	15 mm	20	0,7 µm	1,6 µm	ø2,4 mm	0,48x0,64 mm	460
378-814-4	50X	0,75	5,2 mm	4	0,4 µm	0,49 µm	ø0,48 mm	0,1x0,13 mm	400
378-815-4	100X	0,9	1,3 mm	2	0,3 µm	0,34 µm	ø0,24 mm	0,05x0,06 mm	410

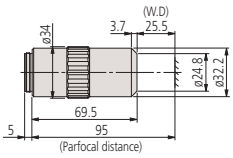

378-787-4

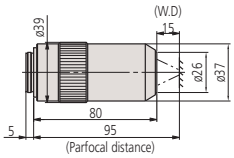

378-788-4

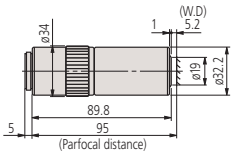

378-814-4

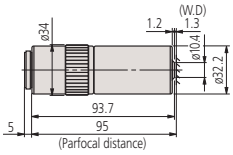

378-815-4

All products to be sold to commercial customers. Product illustrations are without obligation. Product descriptions, in particular any and all technical specifications, are only binding when explicitly agreed upon. For suggested retail prices, please refer to the separate price list.

Mitutoyo

Objective Lens for Brightfield/Darkfield Observation FS-Series

Series 378

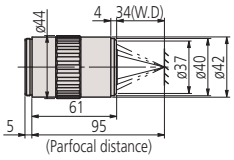

378-830-7

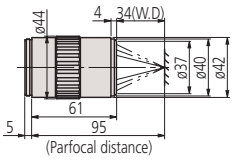

378-831-7

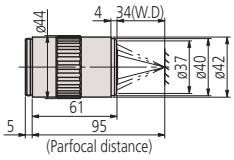

378-832-7

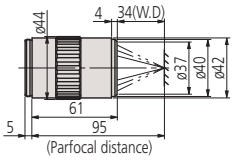

378-833-7

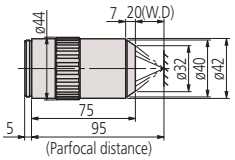

378-834-7

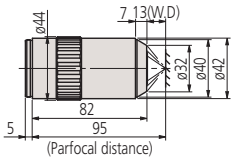

378-835-7

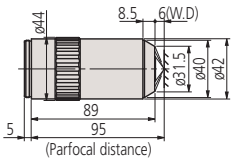

378-836-7

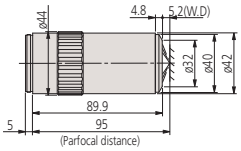

378-845-7

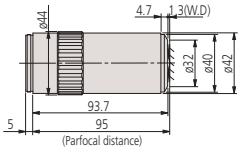

378-846-7

BD Plan Apo for Bright/Dark Field Observation

Compatible with microscope types MF-U / Hyper MF-U

No.	Magnification	N.A.	W.D.	f	R	D.F.	F.O.V. 1	F.O.V. 2	Mass [g]
378-831-7	2X	0,055	34 mm	100	5 µm	91 µm	ø12 mm	2,4x3,2 mm	340
378-832-7	5X	0,14	34 mm	40	2 µm	14 µm	ø4,8 mm	0,96x1,28 mm	350
378-830-7	7,5X	0,21	34 mm	26,67	1,3 µm	6,2 µm	ø3,6 mm	0,64x0,85 mm	350
378-833-7	10X	0,28	34 mm	20	1 µm	3,5 µm	ø2,4 mm	0,48x0,64 mm	350
378-834-7	20X	0,42	20 mm	10	0,7 µm	1,6 µm	ø1,2 mm	0,24x0,32 mm	400
378-835-7	50X	0,55	13 mm	4	0,5 µm	0,9 µm	ø0,48 mm	0,1x0,13 mm	440
378-836-7	100X	0,7	6 mm	2	0,4 µm	0,6 µm	ø0,24 mm	0,05x0,06 mm	460

BD Plan Apo HR for Bright/Dark Field Observation

Compatible with microscope types MF-U / Hyper MF-U

Note : These objectives offer extra-high resolving power.

No.	Magnification	N.A.	W.D.	f	R	D.F.	F.O.V. 1	F.O.V. 2	Mass [g]
378-845-7	50X	0,75	5,2 mm	4	0,4 µm	0,49 µm	ø0,48 mm	0,1x0,13 mm	530
378-846-7	100X	0,9	1,3 mm	2	0,3 µm	0,34 µm	ø0,24 mm	0,05x0,06 mm	545

BD Plan Apo SL for Bright/Dark Field Observation

Compatible with microscope types MF-U / Hyper MF-U

Note : These objectives offer extra-long working distance.

No.	Magnification	N.A.	W.D.	f	R	D.F.	F.O.V. 1	F.O.V. 2	Mass [g]
378-840-7	20X	0,28	30,5 mm	10	1 µm	3,5 µm	ø1,2 mm	0,24x0,32 mm	350
378-841-7	50X	0,42	20 mm	4	0,7 µm	1,6 µm	ø0,48 mm	0,1x0,13 mm	410
378-842-7	80X	0,5	13 mm	2,5	0,6 µm	1,1 µm	ø0,3 mm	0,06x0,08 mm	430
378-843-7	100X	0,55	13 mm	2	0,5 µm	0,9 µm	ø0,24 mm	0,05x0,06 mm	440

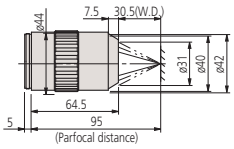

378-840-7

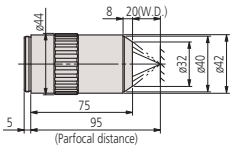

378-841-7

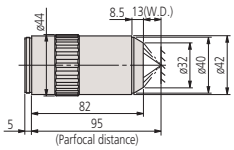

378-842-7

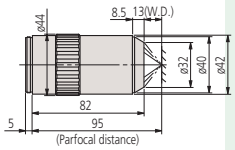

378-843-7

Specifications

Abbreviations in product table	Mag. : Magnification N.A. : Numerical aperture W.D. : Working distance f : Focal distance R : Resolving power D.F. : Focal depth F.O.V. 1 : Field of view when using ø24 mm eyepiece F.O.V. 2 : Field of view when using a digital camera with 1/2" / **12,7 mm** chip size

Refer to the microscope units and objective lenses brochure

All products to be sold to commercial customers. Product illustrations are without obligation. Product descriptions, in particular any and all technical specifications, are only binding when explicitly agreed upon. For suggested retail prices, please refer to the separate price list.

Objective Lens for NIR, NUV and UV Observation FS-Series

Specifications

Abbreviations in product table	Mag. : Magnification N.A. : Numerical aperture W.D. : Working distance f : Focal distance R : Resolving power D.F. : Focal depth F.O.V. 1 : Field of view when using ø24 mm eyepiece F.O.V. 2 : Field of view when using a digital camera with 1/2" / **12,7 mm** chip size
M Plan Apo NIR	Note : These objective lenses are designed so that the image of a workpiece remains focused within the focal depth even when the wavelength used is changed from within the visible range up to the near-infrared (480 to 1800 nm). Therefore the M Plan NIR Series are suitable for laser repair. However, when the wavelength used exceeds 1100 nm, the focussing position may deviate slightly from that in the visible range due to changes in glass dispersion and refractive index.

Refer to the microscope units and objective lenses brochure

Series 378

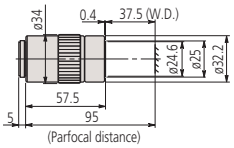

378-822-5

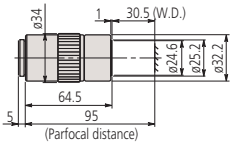

378-823-5

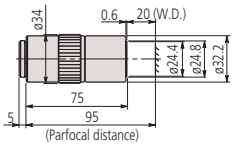

378-824-5

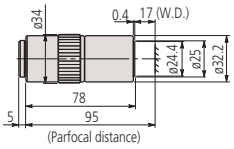

378-825-5

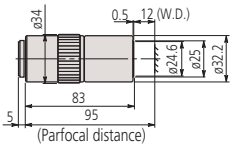

378-826-5

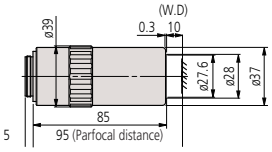

378-863-5
378-864-5

Near-infrared wavelength Corrected
M Plan Apo NIR for Bright Field Observation
Compatible with microscope types VMU / FS-70

No.	Magnification	N.A.	W.D.	f	R	D.F.	F.O.V. 1	F.O.V. 2	Mass [g]
378-822-5	5X	0,14	37,5 mm	40	2 µm	14 µm	ø4,8 mm	0,96x1,28 mm	220
378-823-5	10X	0,26	30,5 mm	20	1,1 µm	4,1 µm	ø2,4 mm	0,48x0,64 mm	250
378-824-5	20X	0,4	20 mm	10	0,7 µm	1,7 µm	ø1,2 mm	0,24x0,32 mm	300
378-825-5	50X	0,42	17 mm	4	0,7 µm	1,6 µm	ø0,48 mm	0,1x0,13 mm	315
378-826-5	100X	0,5	12 mm	2	0,6 µm	1,1 µm	ø0,24 mm	0,05x0,06 mm	335
378-863-5	50X	0,65	10 mm	4	0,42 µm	0,65 µm	ø0,48 mm	0,1x0,13 mm	450
378-864-5	100X	0,7	10 mm	2	0,39 µm	0,56 µm	ø0,24 mm	0,05x0,06 mm	450

All products to be sold to commercial customers. Product illustrations are without obligation. Product descriptions, in particular any and all technical specifications, are only binding when explicitly agreed upon. For suggested retail prices, please refer to the separate price list.

Mitutoyo

Objective Lens for NIR, NUV and UV Observation FS-Series

Series 378

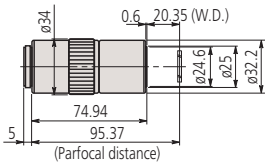

378-827-5

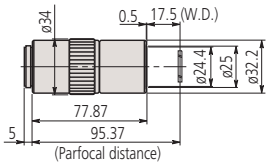

378-828-5

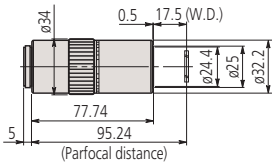

378-829-5

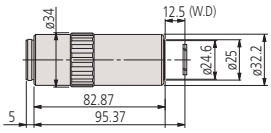

378-752-5

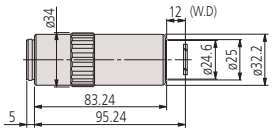

378-754-5

Near-infrared wavelength and LCD Glass Thickness Corrected
LCD Plan Apo NIR for Bright Field Observation
Compatible with microscope types VMU / FS-70
Note : W.D. is just measured in air, not through an LCD glass

No.	Mag./glass thickness [mm]	N.A.	W.D.	f	R	D.F.	F.O.V. 1	F.O.V. 2	Mass [g]
378-827-5	20X/t1,1	0,4	19,98 mm	10	0,7 µm	1,7 µm	ø1,2 mm	0,24x0,32 mm	305
378-828-5	50X/t1,1	0,42	17,13 mm	3,9	0,7 µm	1,6 µm	ø0,48 mm	0,1x0,13 mm	320
378-829-5	50X/t0,7	0,42	17,26 mm	3,9	0,7 µm	1,6 µm	ø0,48 mm	0,1x0,13 mm	320
378-752-5	100X/t1,1	0,5	12,13 mm	2	0,6 µm	1,1 µm	ø0,24 mm	0,05x0,06 mm	335
378-754-5	100X/t0,7	0,5	11,76 mm	2	0,6 µm	1,1 µm	ø0,24 mm	0,05x0,06 mm	335

Near-ultraviolet wavelength Corrected
M Plan Apo NUV for Bright Field Observation
Compatible with microscope types VMU / FS-70

No.	Magnification	N.A.	W.D.	f	R	D.F.	F.O.V. 1	F.O.V. 2	Mass [g]
378-809-5	10X	0,28	30,5 mm	20	1 µm	3,5 µm	ø2,4 mm	0,48x0,64 mm	255
378-817-6	20X	0,4	17 mm	10	0,7 µm	1,7 µm	ø1,2 mm	0,24x0,32 mm	340
378-818-6	50X	0,42	15 mm	4	0,7 µm	1,6 µm	ø0,48 mm	0,1x0,13 mm	350
378-888-6	50X	0,65	10 mm	4	0,42 µm	0,65 µm	ø0,48 mm	0,1x0,13 mm	500
378-819-4	100X	0,5	11 mm	2	0,6 µm	1,1 µm	ø0,24 mm	0,05x0,06 mm	380

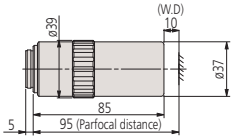

378-888-6

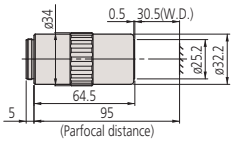

378-809-5

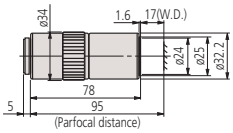

378-817-6

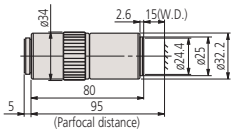

378-818-6

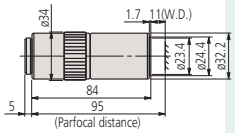

378-819-4

Specifications

Abbreviations in product table	Mag. : Magnification N.A. : Numerical aperture W.D. : Working distance f : Focal distance R : Resolving power D.F. : Focal depth F.O.V. 1 : Field of view when using ø24 mm eyepiece F.O.V. 2 : Field of view when using a digital camera with 1/2" / **12,7 mm** chip size

Refer to the microscope units and objective lenses brochure

All products to be sold to commercial customers. Product illustrations are without obligation. Product descriptions, in particular any and all technical specifications, are only binding when explicitly agreed upon. For suggested retail prices, please refer to the separate price list.

Objective Lens for NIR, NUV and UV Observation FS-Series

Specifications

Abbreviations in product table

Mag. : Magnification
N.A. : Numerical aperture
W.D. : Working distance
f : Focal distance
R : Resolving power
D.F. : Focal depth
F.O.V. 1 : Field of view when using ø24 mm eyepiece
F.O.V. 2 : Field of view when using a digital camera with 1/2" / **12,7 mm** chip size

Refer to the microscope units and objective lenses brochure

Series 378

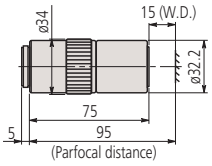

378-753-4

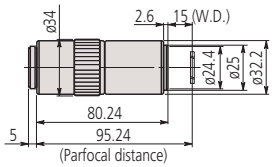

378-820-4

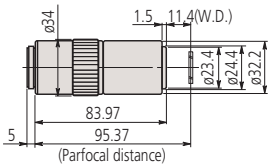

378-751-4

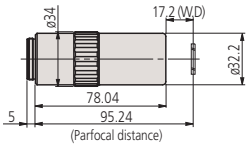

378-890-6

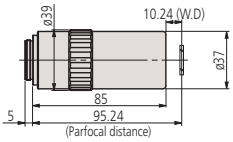

378-891-6

Near-ultraviolet wavelength and LCD Glass Thickness Corrected
LCD Plan Apo NUV for Bright Field Observation
Compatible with microscope types VMU / FS-70
Note : For **378-820-4,** W.D. is just measured in air, not through an LCD glass

No.	Mag./glass thickness [mm]	N.A.	W.D.	f	R	D.F.	F.O.V. 1	F.O.V. 2	Mass [g]
378-890-6	20X/t0,7	0,4	16,96 mm	10	0,7 µm	1,7 µm	ø 1,2 mm	0,24x0,32 mm	340
378-753-6	50X/t1,1	0,42	14,53 mm	4	0,7 µm	1,6 µm	ø0,48 mm	0,1x0,13 mm	310
378-891-6	50X/t0,7	0,65	9,76 mm	4	0,4 µm	0,7 µm	ø 0,48 mm	0,1x0,13 mm	500
378-820-6	50X/t0,7	0,42	14,76 mm	4	0,7 µm	1,6 µm	ø0,48 mm	0,1x0,13 mm	310
378-751-4	100X/t1,1	0,5	11,03 mm	2	0,6 µm	1,1 µm	ø0,24 mm	0,05x0,06 mm	380

Ultraviolet wavelenght Corrected
M Plan UV for Bright Field Observation
Compatible with microscope types VMU / FS-70

No.	Magnification	N.A.	W.D.	f	R	D.F.	F.O.V. 1	F.O.V. 2	Mass [g]
378-844-15	10X	0,25	20 mm	20	1,1 µm	4,4 µm	ø2,4 mm	0,48x0,64 mm	310
378-837-7	20X	0,36	15 mm	10		2,1 µm	ø1,2 mm	0,24x0,32 mm	330
378-838-8	50X	0,4	12 mm	4	0,7 µm	1,7 µm	ø0,48 mm	0,1x0,13 mm	400
378-839-5	80X	0,55	10 mm	2,9	0,5 µm	0,9 µm	ø0,3 mm	0,06x0,08 mm	380

Ultraviolet wavelength and LCD Glass Thickness Corrected
LCD Plan UV for Bright Field Observation
Compatible with microscope types VMU / FS-70>

No.	Mag./glass thickness [mm]	N.A.	W.D.	f	R	D.F.	F.O.V. 1	F.O.V. 2	Mass [g]
378-892-7	20X/t0,7	0,36	15 mm	10	0,8 µm	2,1 µm	ø1,2 mm	0,24x0,32 mm	300
378-893-8	50X/t0,7	0,41	12,4 mm	4	0,7 µm	1,6 µm	ø0,48 mm	0,1x0,13 mm	400

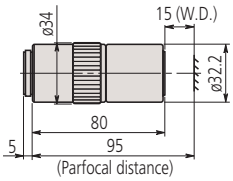

378-837-7

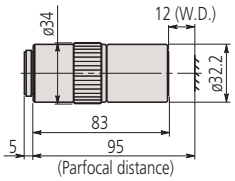

378-838-8

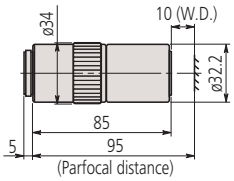

378-839-5

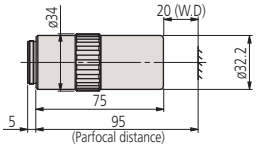

378-844-15

All products to be sold to commercial customers. Product illustrations are without obligation. Product descriptions, in particular any and all technical specifications, are only binding when explicitly agreed upon. For suggested retail prices, please refer to the separate price list.

Mitutoyo

Measuring Projector PJ-A3000 Series

Series 302

The PJ-A3000 Series profile projector is a medium-sized model that gives you excellent versatility and easy operation.
The PJ-A3000 offers you the following benefits:

- The easy-to-read digital XY counter is located near the projection screen to minimize eye movement.
- You can measure angles easily with the digital readout protractor screen.

302-701-1D

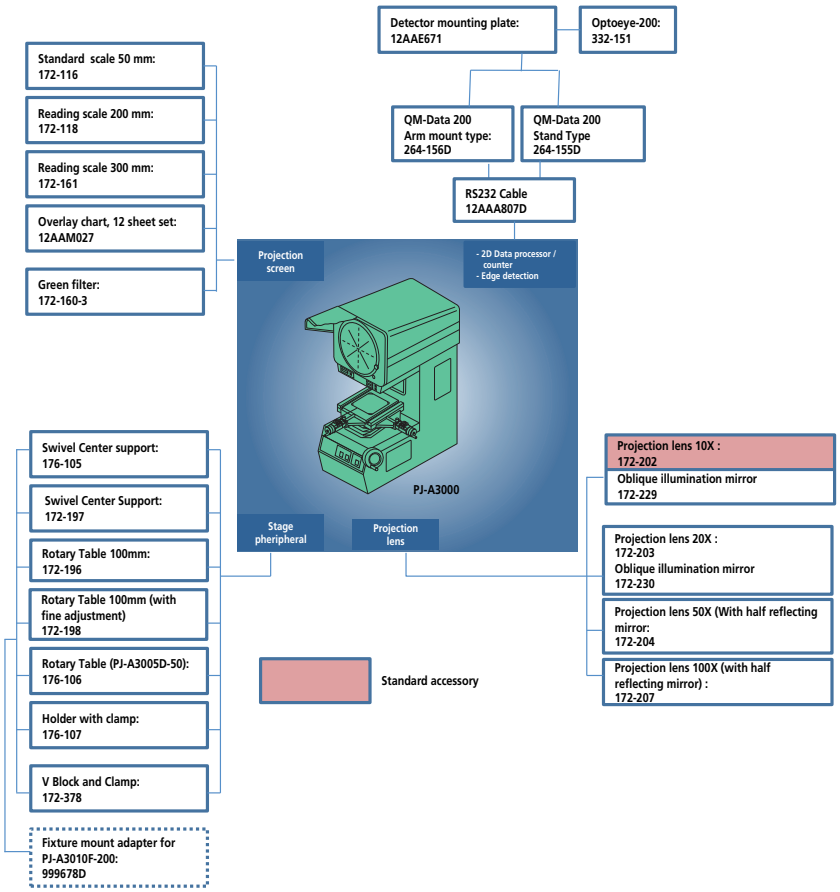

Specifications

Projected image	Inverted
Projector screen	Effective diameter : 315 mm Screen material : Fine-ground glass Screen rotation : ±360°, fine feed and clamp Angle display : Digital counter (LED) Resolution : 1' or 0,01° (switchable) Range : ±370° ABS/INC mode switching, Zero Set Reference lines : Cross-hairs
Projection lens	10X **(172-202)** Optional : 20X, 50X, 100X
Magnification accuracy	Contour illumination : ±0,1% or better Surface illumination : ±0,15% or better
Contour illumination	Light source : Halogen bulb (24V, 150W) Optical system : Telecentric Functions : 2-step (High/Low) brightness switch, Heat-absorbing filter, Cooling fan
Surface illumination	Light source : Halogen bulb (24V, 150W) Optical system : Vertical illumination with adjustable condenser lens Functions : Heat-absorbing filter, Cooling fan
Focusing	Manual
Resolution	0,001 mm (0,001 mm : digital head)
Power supply	220 - 240V AC, 50/60Hz

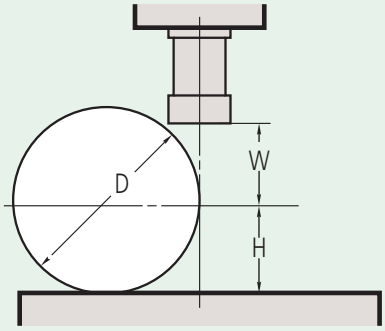

D : Max. workpiece diameter
W : Working distance
H : Max. workpiece height

mm

		Magnification			
		10X	20X	50X	100X
View field		ø31.5	ø15.7	ø6.3	ø3.1
W		66 (20)	32.5 (2)	12.6	5
H	-50 models*	123.5	123.5	123.5	123.5
	-100 models	91	91	91	91
	-150 models	103.5	103.5	103.5	103.5
	200 models	92.5	92.5	92.5	92.5
D	-50 models*	224 (198)	87 (61)	27	10
	-100 models	182	87 (61)	27	10
	-150 models	207 (198)	87 (61)	27	10
	200 models	185	87 (61)	27	10

( ) When using surface illumination

Refer to the PJ-A3000 brochure

All products to be sold to commercial customers. Product illustrations are without obligation. Product descriptions, in particular any and all technical specifications, are only binding when explicitly agreed upon. For suggested retail prices, please refer to the separate price list.

Measuring Projector PJ-A3000 Series

Series 302 - Metric model

Standard accessories

No.	Description
172-202	Projection lens set, 10X magnification
383876	Cover, Vinyl cover for PJ-3010F projector
512305	Halogen Lamp for Measuring Projector, 24V/150W

Optional accessories

No.	Description
172-116	Inspection tool, Standard scale 50 mm/ 0,1 mm
172-160-3	Green Filter, Colour filter
172-161	Inspection tool, Reading Scale 300 mm/ 0,5 mm
172-197	Fixture/clamping material Swivel center support
172-203	Projection lens set, 20X magnification
172-204	Projection lens set, 50X magnification
172-207	Projection lens set, 100X magnification
172-229	Lens accessory, Oblique reflecting mirror for 10X lens
172-230	Lens accessory, Oblique reflecting mirror for 20X lens
172-378	Fixture/clamping material, V-block with clamp
176-107	Fixture/clamping material, Holder with clamp
172-118	Inspection tool, Reading scale 200 mm/ 0,5 mm
172-160-2	Green filter
176-105	Fixture/clamping material, Swivel center support
999678D	Adapter, Stage mount adapter
512305	Halogen Lamp for Measuring Projector, 24V/150W
12AAE671	Attachment, Optoeye-200 Attachment A, 250-350 mm
332-151	Sensor, Optoeye-200 edge detection sensor
176-106	Rotary table
172-196	Rotary table, 100 mm for TM-1005B
172-198	Rotary table, 100 mm with fine feed knob for TM-1005B
264-155D	2D Data processor, QM-Data 200, stand type
264-156D	2D Data processor, QM-Data 200, arm mount type

176-106 : for stage 150 x 50 mm
172-196 and 172-198 : for stage 100 x 100 and 200 x 100 mm

	METRIC - (INCH/METRIC)	
	302-700D - (302-714E) 302-704D - (302-718E) 302-708D - (302-719E) 302-709D	302-701D - (302-711E) 302-702D - (302-712E) 302-703D - (302-713E) 302-705D 302-706D 302-707D
176-106	X	—
172-196	—	X*
172-198	—	X*
176-105	X	X*
172-197	—	X*
176-107	X	X*
172-378	X	X*

*** Fixture mount adapter (999678) is required for 302-701-1D**

172-116

172-229

172-160-3

Metric

XY stage 50 x 50 or 150 x 50 or 100 x100 or 200 x 100 mm

Model	PJ-A3005D-50	PJ-A3005F-150	PJ-A3010F-100	PJ-A3010F-200
No.	**302-704-1D**	**302-702-1D**	**302-703-1D**	**302-701-1D**
XY stage [mm]	50 x 50	150 x 50	100 x 100	200 x 100
Measuring method	Digimatic micrometer head	Linear encoder	Linear encoder	Linear encoder
Quick-release mechanism	–	X and Y axes	X and Y axes	X and Y axes
XY stage table top size [mm]	152 x 152	280 x 152	250 x 250	380 x 250
XY stage effective area [mm]	82 x 82	185 x 84	142 x 142	266 x 170
Stage glass No.	**380405**	**381349**	**12BAE041**	**382762**
Table swiveling function	–	–	–	±3°
Max stage loading [kg]	10	8	10	8
Mass kg	107	116	112	140

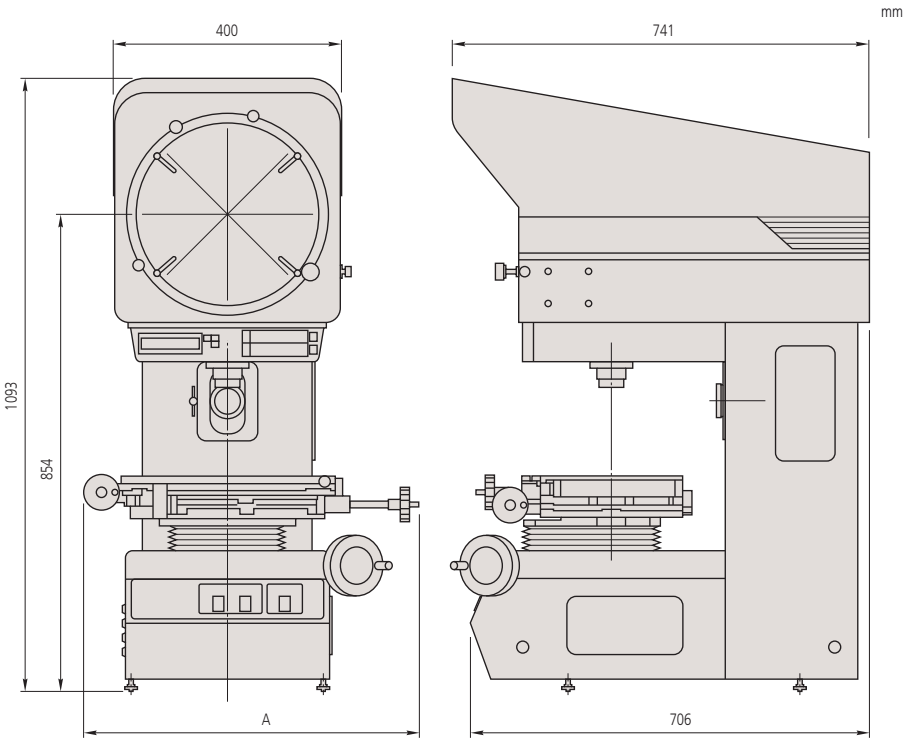

A = 593 mm : 302-701-1D, A = 446 mm : 302-702-1D
A = 427 mm : 302-703-1D

264-155D, QM-Data 200

OPTOEYE-200

302-701-1D

302-704-1D

302-702-01D

302-703-1D

All products to be sold to commercial customers. Product illustrations are without obligation. Product descriptions, in particular any and all technical specifications, are only binding when explicitly agreed upon. For suggested retail prices, please refer to the separate price list.

Measuring Projector PJ-H30 Series

Series 303

This measuring projector has adjustable incident illumination.
The PJ-H30 offers you the following benefits:

- By rotating the condenser lens and changing the angle of the mirror in the objective, you can represent even poorly reflecting surfaces optimally.
- Improved light intensity of a projected subject thanks to the new optical contour illumination system.
- High measuring accuracy (above JIS standard).
- Measuring stage with rapid single-handed adjustment on both axes enabling you to switch smoothly between quick positioning and fine adjustment.
- Constant current power supply unit with acceleration control to maximize the service life of the halogen lamp.
- Easily read digital counter with large digit display.
- The PJ-H30D models also offer you a built-in precision edge detector (Optoeye).
- RS-232C output.

303-735-1D

Vertical / oblique switchable surface illumination

Vertical illumination

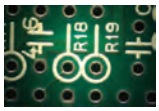

Oblique illumination

1010B

2010B

2017B

Specifications

Accuracy	(3+0,02L) µm L : Max length measurement
Projected image	Erect
Projector screen	Effective diameter : 306 mm Screen material : Fine-ground glass Screen rotation : ±360°, fine adjustment and clamp Angle display : Digital counter (LED) Resolution : 1' or 0,01° (switchable) Range : ±370° ABS/INC mode switching, Zero Set Reference lines : Cross-hairs
Projection lens	10X **(172-472)** Optional : 5X, 20X, 50X, 100X
Magnification accuracy	Contour illumination : ±0,1% or better Surface illumination : ±0,15% or better
Contour illumination	Light source : Halogen bulb (24V, 150W) Optical system : Telecentric zoom Functions : Continuously variable brightness adjustment, Heat-absorbing filter, Cooling fan
Surface illumination	Light source : Halogen bulb (24V, 150W) Optical system : Vertical/Oblique illumination with an adjustable condenser lens Functions : Continuously variable brightness adjustment, Heat-absorbing filter, Cooling fan
Power supply	220V AC, 50/60Hz
Resolution	0,001 mm

Unit: mm

	Magnification				
	5X	10X	20X	50X	100X
View field	ø61.2	ø30.6	ø15.3	ø6.12	ø3.06
H	105	105	105	105	105
W	66	70.5	56.5	50	50
D	148	197	137	114	114

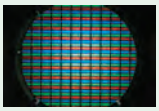

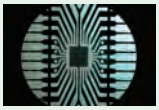

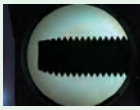

Profile Projector brochure on request

All products to be sold to commercial customers. Product illustrations are without obligation. Product descriptions, in particular any and all technical specifications, are only binding when explicitly agreed upon. For suggested retail prices, please refer to the separate price list.

Measuring Projector PJ-H30 Series

Series 303

Model 1010B - 100 x 100 mm
XY stage table size : 300 x 240 mm
XY stage effective area : 180 x 150 mm
Stage glass No. : **380412**
Swiveling function : ±3°
Max stage loading : 10 kg
Mass : 176 kg

Model	PJ-H30A	PJ-H30D
No.	**303-712-1D**	**303-732-1D**
Focusing	Manual	Power focus
Edge detector	Optional	Built-In

Model 2010B - 200 x 100 mm
XY stage table size : 350 x 280 mm
XY stage effective area : 250 x 150 mm
Stage glass No. : **382762**
Swiveling function : ±3°
Max stage loading : 10 kg
Mass : 178 kg

Model	PJ-H30A	PJ-H30D
No.	**303-713-1D**	**303-733-1D**
Focusing	Manual	Power focus
Edge detector	Optional	Built-In

Model 2017B - 200 x 170 mm
XY stage table size : 410 x 342 mm
XY stage effective area : 270 x 240 mm
Stage glass No. : **12BAD363**
Swiveling function : ±5°
Max stage loading : 20 kg
Mass : 205 kg

Model	PJ-H30A	PJ-H30D
No.	**303-714-1D**	**303-734-1D**
Focusing	Manual	Power focus
Edge detector	Optional	Built-In

Model 3017B - 300 x 170 mm
XY stage table size : 510 x 342 mm
XY stage effective area : 370 x 240 mm
Stage glass No. : **12BAD330**
Swiveling function : ±5°
Max stage loading : 20 kg
Mass : 212 kg

Model	PJ-H30A	PJ-H30D
No.	**303-715-1D**	**303-735-1D**
Focusing	Manual	Power focus
Edge detector	Optional	Built-In

All products to be sold to commercial customers. Product illustrations are without obligation. Product descriptions, in particular any and all technical specifications, are only binding when explicitly agreed upon. For suggested retail prices, please refer to the separate price list.

Mitutoyo

Measuring Projector PJ-H30 Series

Series 303

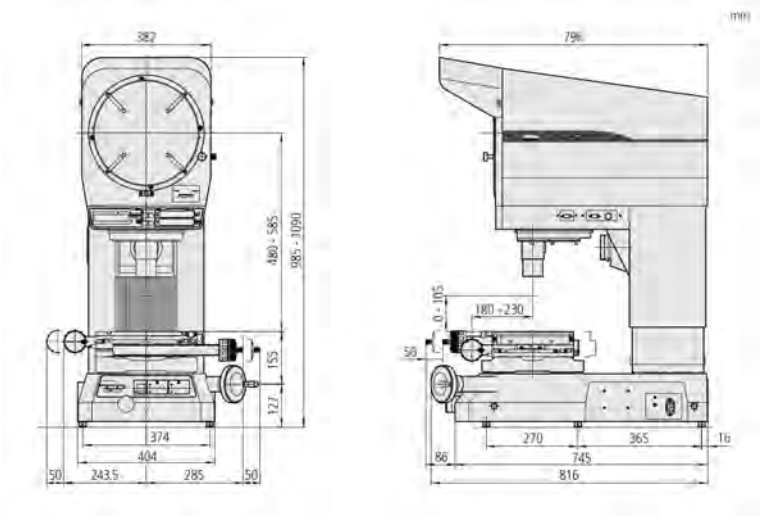

1010B model

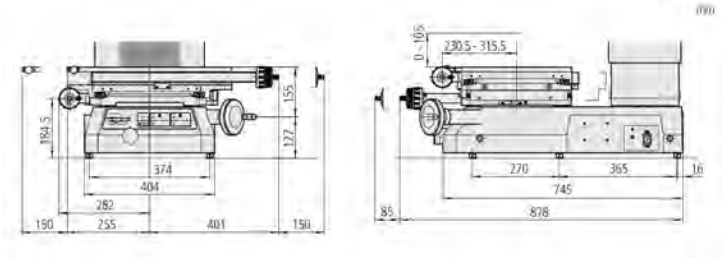

3017B model

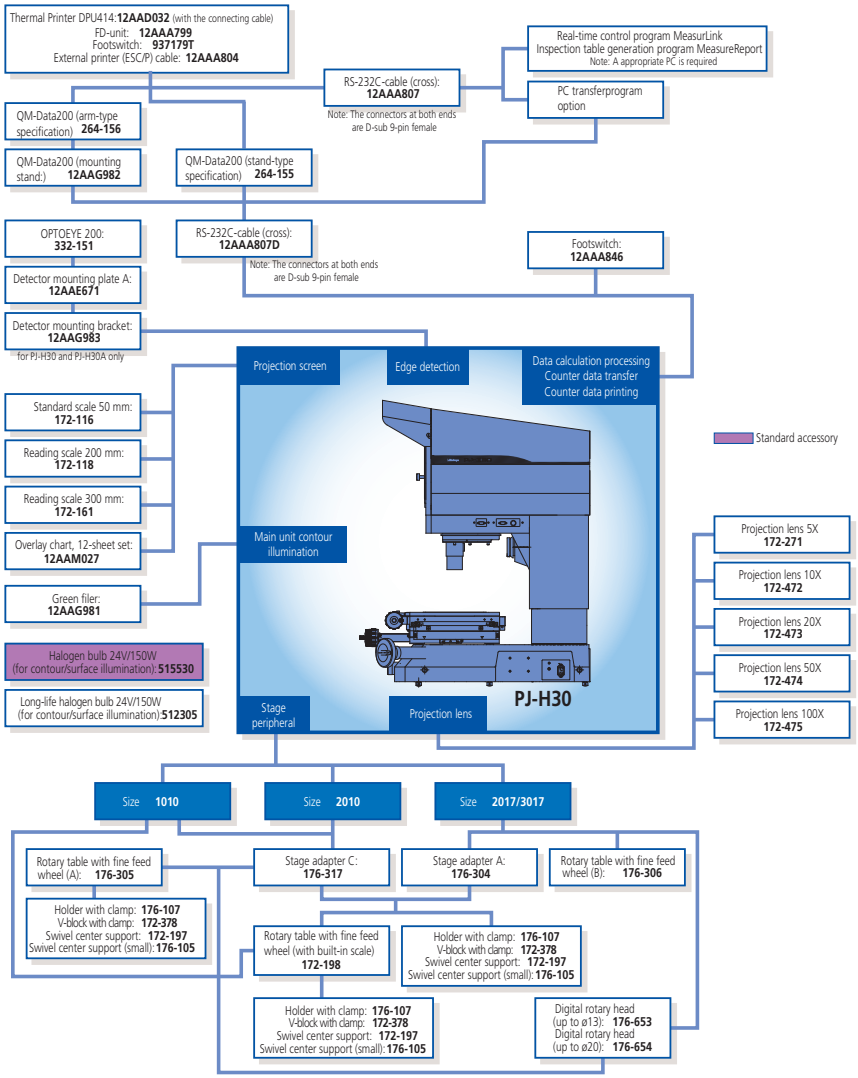

Optional accessories

No.	Description
332-151	Sensor, Optoeye-200 edge detection sensor
12AAE671	Attachment, Optoeye-200 Attachment A, 250-350 mm
12AAG983	Attachment, Optoeye-200 Attachment for PJ-H30 Series
12AAG981	Filter, Green filter for PJ-H30 Series projector
172-116	Inspection tool, Standard scale 50 mm/ 0,1 mm
172-118	Inspection tool, Reading scale 200 mm/ 0,5 mm
172-161	Inspection tool, Reading Scale 300 mm/ 0,5 mm
172-271	Projection lens, 5X magnification for PJ-311
172-473	Projection lens, 20X magnification for PJ-H30 Series
172-474	Projection lens, 50X magnification for PJ-H30 Series
172-475	Projection lens, 100X magnification for PJ-H30 Series
176-105	Fixture/clamping material, Swivel center support
172-197	Fixture/clamping material Swivel center support
172-198	Rotary table, 100 mm with fine feed knob for TM-1005B
172-378	Fixture/clamping material, V-block with clamp
176-305	Rotary Table, Type A, D=240 mm
176-306	Rotary Table, Type B, D=270 mm
011534	MC Special Cleaner
12AAA807D	Cable RS-232C 2m
12AAG982	Stand, Stand for QM-Data 200 on PJ-H30 Series
264-155D	2D Data processor, QM-Data 200, stand type
264-156D	2D Data processor, QM-Data 200, arm mount type

264-155D
QM-Data 200

All products to be sold to commercial customers. Product illustrations are without obligation. Product descriptions, in particular any and all technical specifications, are only binding when explicitly agreed upon. For suggested retail prices, please refer to the separate price list.

Measuring Projector PV-5110

Series 304

- This measuring projector is a robust stand-alone device.
- The large rotatable screen guarantees you good observation and easy measuring.

Specifications

Projected image	Inverted
Projector screen	Effective diameter : 508 mm Screen material : Fine-ground glass Screen rotation : ±360°, fine adjustment and clamp Angle reading : Digital counter (LED) Resolution : 1' or 0,01° (switchable) Range : ±370° ABS/INC mode switching, Zero Set Reference lines : Cross-hairs
Projection lens	10X **(172-402)** Optional : 5X, 20X, 50X, 100X
Magnification accuracy	Contour illumination : ±0,1% or better Surface illumination : ±0,15% or better
Contour illumination	Light source : Halogen bulb (24V, 150W) Optical system : Telecentric zoom Functions : 2-step (High/Low) brightness switch, Heat-absorbing filter, Cooling fan
Surface illumination	Light source : Halogen bulb (24V, 150W) Optical system : Vertical illumination Functions : Adjustable condenser lens, Oblique illumination (for 5X, 10X and 20X), Heat-absorbing filter, Cooling fan
Focusing	Manual
Resolution	0,001 mm
Power supply	220 - 240V AC, 50/60Hz
Mass	210 kg

mm

	Magnification				
	5X	10X	20X	50X	100X
View field	ø101.6	ø50.8	ø25.4	ø10.16	ø5.08
H	125	181	206	87	87
W	60 (27)	60	60	32.4	22.5
D	120	120	120	64.8	45

( ) When using surface illumination

Profile Projector brochure on request

304-919D
Counter is optional

KA Counter

QM-Data 200

OPTOEYE 200

All products to be sold to commercial customers. Product illustrations are without obligation. Product descriptions, in particular any and all technical specifications, are only binding when explicitly agreed upon. For suggested retail prices, please refer to the separate price list.

Measuring Projector PV-5110

Series 304 - Accessories/Dimensions

Model	PV-5110
No.	**304-919D**
XY stage [mm]	200 x 100
Measuring method	Linear encoder
Quick-release mechanism	X and Y axes
XY stage table top size [mm]	380 x 250
XY stage effective area [mm]	266 x 170
Stage glass No.	**382762**
Table swiveling function	±3°
Max stage loading [kg]	5

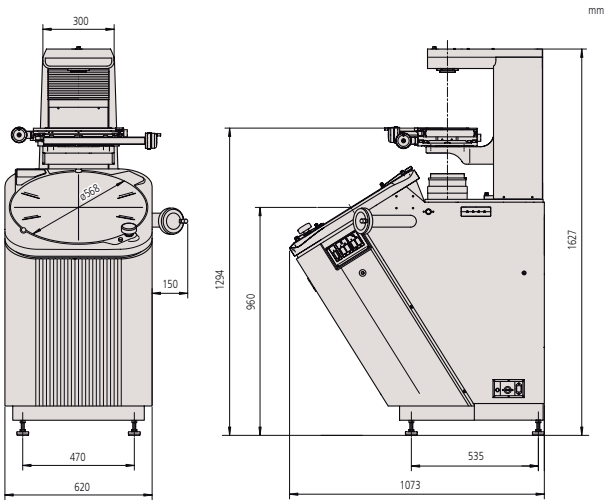

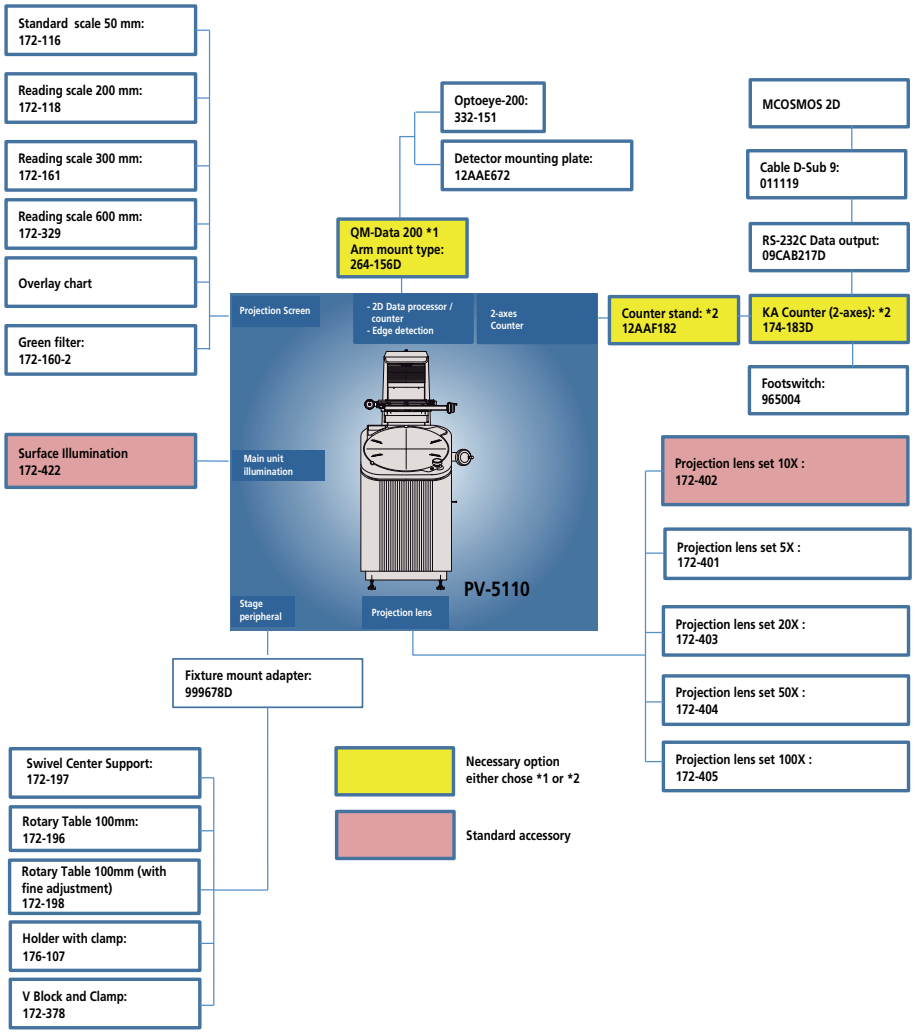

Standard accessories

No.	Description
172-402	Projection lens set, 10X magnification
512305	Halogen Lamp for Measuring Projector, 24V/150W
12AAF182	Counter stand, For PV-5110 projector
382762	Stage glass, 280 x 180 mm, for projector
172-422	Illumination, Surface illumination unit PV-5110

Optional accessories

No.	Description
172-401	Projection lens set, 5X magnification
172-403	Projection lens set, 20X magnification
172-404	Projection lens set, 50X magnification
172-405	Projection lens set, 100X magnification
172-116	Inspection tool, Standard scale 50 mm/ 0,1 mm
172-330	Inspection tool, Standard scale 80 mm/ 0,1 mm
172-161	Inspection tool, Reading Scale 300 mm/ 0,5 mm
172-329	Inspection tool, Reading scale 600 mm/ 0,5 mm
172-160-2	Green filter
172-319	Canopy
510189	Vinyl cover for PV500/600 projector
172-198	Rotary table, 100 mm with fine feed knob for TM-1005B
172-197	Fixture/clamping material Swivel center support
176-107	Fixture/clamping material, Holder with clamp
172-378	Fixture/clamping material, V-block with clamp
011534	MC Special Cleaner
12AAE672	Attachment, Optoeye-200 Attachment B, 500-600 mm
264-156D	2D Data processor, QM-Data 200, arm mount type
174-183D	Linear Scale Counter KA-212

172-319

All products to be sold to commercial customers. Product illustrations are without obligation. Product descriptions, in particular any and all technical specifications, are only binding when explicitly agreed upon. For suggested retail prices, please refer to the separate price list.

Measuring Projector PH-A14

Series 172

Measuring Projector PH-A14

- Due to the PH-A14's horizontal-beam illumination, you can easily measure larger and heavier workpieces including toothed racks and punching tools.
- You can use the projector for a wide range of applications due to its generous 203 x 102 mm stage travel and 45 kg allowable stage loading.

Specifications

Range	200 x 100
Projected image	Inverted
Projector screen	Effective diameter : 356 mm Screen material : Fine-ground glass Screen rotation : ±360°, fine adjustment and clamp Angle reading : Vernier, graduation : 1' Resolution : 1' or 0,01° (switchable) Range : ±370° Reference lines : Cross-hairs
Projection lens	10X **(172-011)** Optional : 20X, 50X, 100X
Magnification accuracy	Contour illumination : ±0,1% or better Surface illumination : ±0,15% or better
Contour illumination	Light source : Halogen bulb (24V, 150W) Optical system : Telecentric Functions : Heat-absorbing filter, Cooling fan
Surface illumination	Light source : Halogen bulb (24V, 150W) Optical system : Vertical illumination Functions : Adjustable condenser lens, Heat-absorbing filter, Cooling fan
Focusing	Manual
Resolution	0,001 mm (using optional KA counter)
Power supply	220 - 240V AC, 50/60Hz
Mass	140 kg

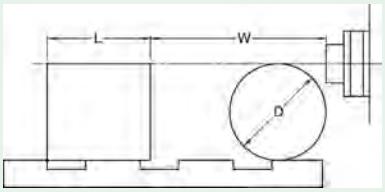

L : Max. workpiece width
W : Working distance
D : Max. workpiece diameter

PH-A14 mm

	Magnification			
	10X	20X	50X	100X
View field	35.6	17.3	7.12	3.56
L	235	235	80	109
W	93	40	14.6	9.5
D	130	116	30.4	19

172-810-20D

KA Counter

QM-Data 200

OPTOEYE 200

All products to be sold to commercial customers. Product illustrations are without obligation. Product descriptions, in particular any and all technical specifications, are only binding when explicitly agreed upon. For suggested retail prices, please refer to the separate price list.

Measuring Projector PH-A14

Series 172 - Accessories/Dimensions

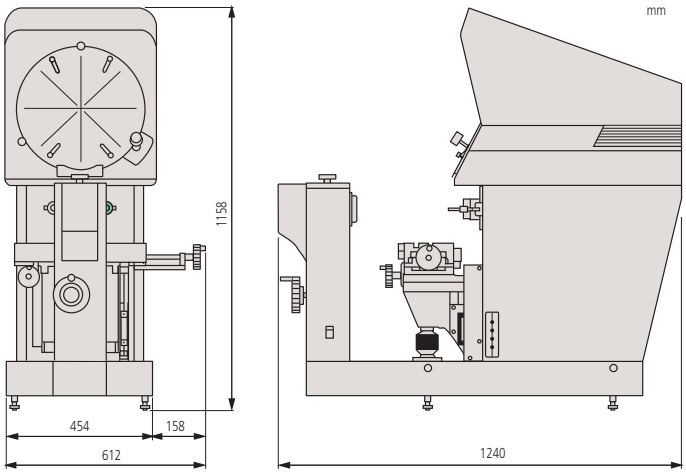

Model	PH-A14
No.	**172-810-20D**
XY stage [mm]	203 x 102
Measuring method	Linear encoder
XY stage table top size [mm]	407 x 153
Max stage loading [kg]	45

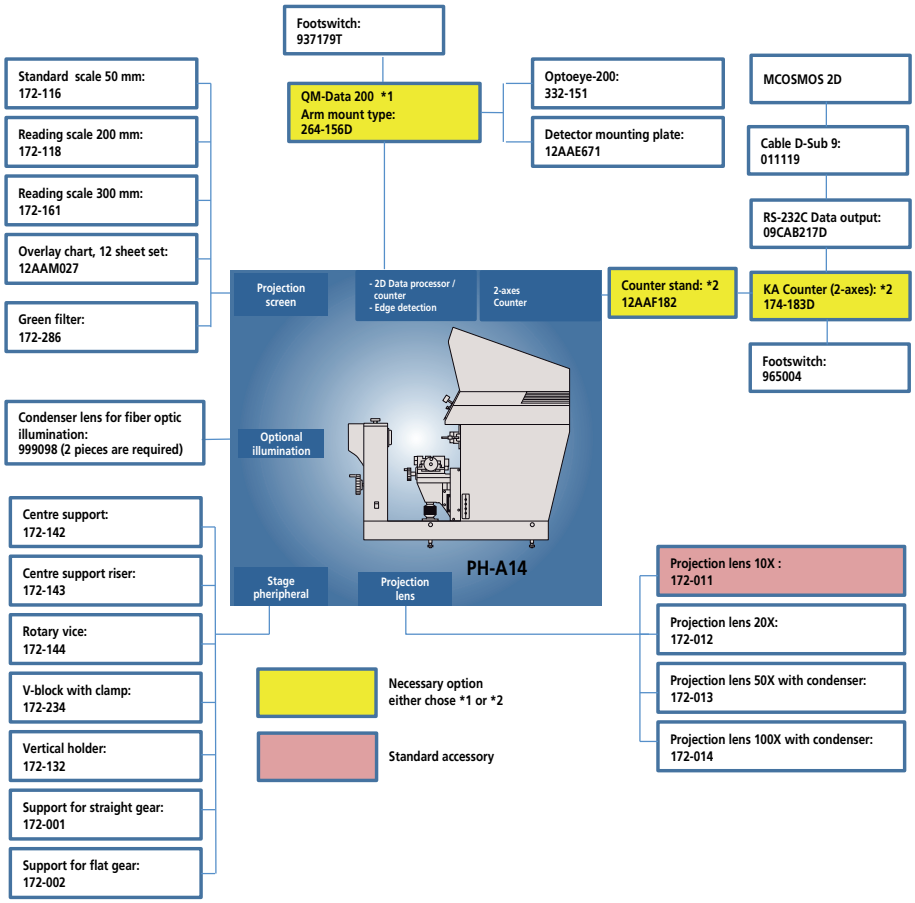

Specifications

Range	200 x 100

Standard accessories

No.	Description
172-011	Projection lens set, 10X magnification for PH-A14
512305	Halogen Lamp for Measuring Projector, 24V/150W

Optional accessories

No.	Description
172-013	Projection lens set, 50X magnification for PH-A14
172-012	Projection lens set, 20X magnification for PH-A14
172-014	Projection lens set, 100X magnification for PH-A14
172-116	Inspection tool, Standard scale 50 mm/ 0,1 mm
172-118	Inspection tool, Reading scale 200 mm/ 0,5 mm
172-286	Filter, Colour filter
172-143	Fixture/clamping material, Riser for center stage
172-144	Fixture/clamping material, Rotary vise
172-234	Fixture/clamping material, V-block with clamp
172-132	Fixture/clamping material, Vertical workpiece holder
172-161	Inspection tool, Reading Scale 300 mm/ 0,5 mm
172-001	Fixture/clamping material, Support for straight gear
172-002	Fixture/clamping material, Support for flat gear
172-142	Fixture/clamping material, Center support
011534	MC Special Cleaner
332-151	Sensor, Optoeye-200 edge detection sensor
12AAE671	Attachment, Optoeye-200 Attachment A, 250-350 mm
264-156D	2D Data processor, QM-Data 200, arm mount type
12AAF182	Counter stand, For PV-5110 projector
174-183D	Linear Scale Counter KA-212

All products to be sold to commercial customers. Product illustrations are without obligation. Product descriptions, in particular any and all technical specifications, are only binding when explicitly agreed upon. For suggested retail prices, please refer to the separate price list.

Measuring Projector PH-3515F

Series 172

Measuring Projector PH-3515F

– Due to the PH-3515F's horizontal-beam illumination, you can easily measure larger and heavier workpieces including toothed racks and punching tools. You can use the projector for a wide range of applications due to its generous 254 x 152 mm stage travel and 45 kg allowable stage loading.

Specifications

Range	254 x 152
Projected image	Erect
Projector screen	Effective diameter : 353 mm Screen material : Fine-ground glass Screen rotation : ±360°, fine feed and clamp Angle display : Digital counter (LED) Resolution : 1' or 0,01° (switchable) Range : ±370° ABS/INC mode switching, Zero Set Reference lines : Cross-hairs
Projection lens	10X **(172-184)** Optional : 5X, 20X, 50X, 100X
Magnification accuracy	Contour illumination : ±0,1% or better Surface illumination : ±0,15% or better
Contour illumination	Light source : Halogen bulb (24V, 150W) Optical system : Telecentric system Functions : 2-step (High/Low) brightness adjustment, Heat-absorbing filter, Cooling fan
Surface illumination	Light source : Halogen bulb (24V, 150W) Optical system : Vertical illumination Functions : Adjustable condenser lens, 2-step (High/Low) brightness adjustment, Heat-absorbing filter, Cooling fan
Focusing	Manual
Resolution	0,001 mm
Power supply	220 - 240V AC, 50/60Hz
Mass	150 kg

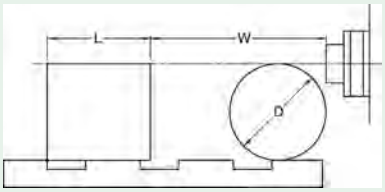

L : Max. workpiece width
W : Working distance
D : Max. workpiece diameter

PH-3515F — mm

	Magnification				
	5X	10X	20X	50X	100X
View field	70.6	35.3	17.65	7.06	3.5
L	175	235	235	80	109
W	160 (64)	93 (35)	40	14.6	9.5
D	152.4	152.4	116	30.4	19

( ) When using surface illumination

172-868D

Model	PH-3515F
No.	**172-868D**
XY stage [mm]	254 x 152
Measuring method	Linear encoder
Quick-release mechanism	X axis
XY stage table top size [mm]	450 x 146
Table swiveling function	±10°
Max stage loading [kg]	45

All products to be sold to commercial customers. Product illustrations are without obligation. Product descriptions, in particular any and all technical specifications, are only binding when explicitly agreed upon. For suggested retail prices, please refer to the separate price list.

Measuring Projector PH-3515F

Series 172 - Accessories/Dimensions

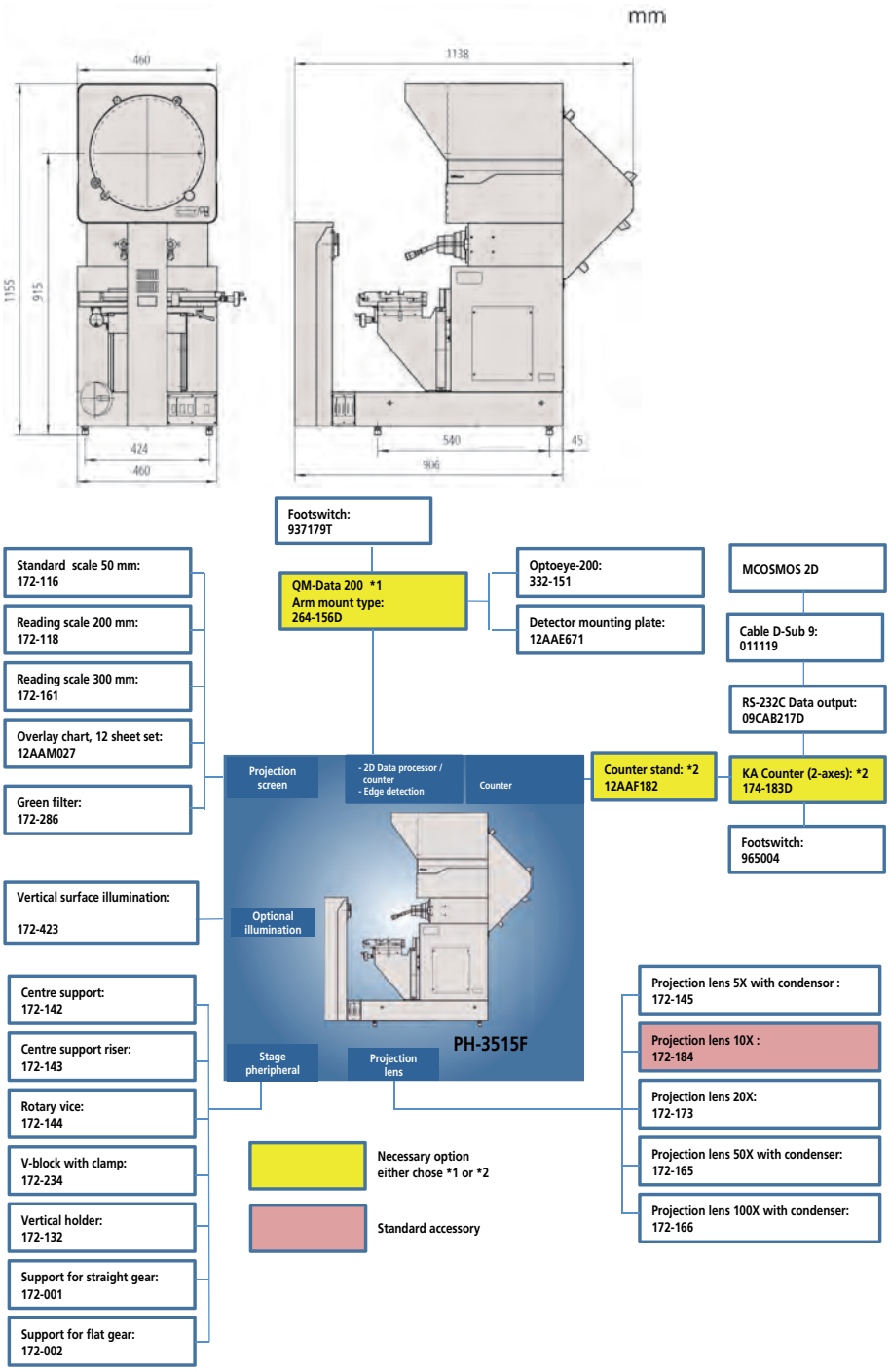

Standard accessories

No.	Description
383228	Cover, Vinyl cover for PH3500 projector
172-184	Projection lens, 10X magnification for PH-3515F
512305	Halogen Lamp for Measuring Projector, 24V/150W
12BAA637	Bulb, Halogen 24V/200W for PH-3515F twin fiber

Optional accessories

No.	Description
172-145	Projection lens set, 5X magnification
172-173	Projection lens, 20X magnification for PH-3515F
172-165	Projection lens set, 50X magnification for PH-3515F
172-166	Projection lens set, 100X magnification for PH-3515F
172-423	Illumination, Surface illumination unit PH-3515F
172-116	Inspection tool, Standard scale 50 mm/ 0,1 mm
172-118	Inspection tool, Reading scale 200 mm/ 0,5 mm
172-161	Inspection tool, Reading Scale 300 mm/ 0,5 mm
172-286	Filter, Colour filter
172-142	Fixture/clamping material, Center support
172-143	Fixture/clamping material, Riser for center stage
172-144	Fixture/clamping material, Rotary vise
172-234	Fixture/clamping material, V-block with clamp
172-132	Fixture/clamping material, Vertical workpiece holder
12AAM027	Overlay chart set, for Measuring Projector No. 11-22
12AAF182	Counter stand, For PV-5110 projector
011534	MC Special Cleaner
332-151	Sensor, Optoeye-200 edge detection sensor
12AAE671	Attachment, Optoeye-200 Attachment A, 250-350 mm
264-156D	2D Data processor, QM-Data 200, arm mount type
174-183D	Linear Scale Counter KA-212

KA Counter

QM-Data 200

All products to be sold to commercial customers. Product illustrations are without obligation. Product descriptions, in particular any and all technical specifications, are only binding when explicitly agreed upon. For suggested retail prices, please refer to the separate price list.

Data Processing Unit QM-Data 200

Series 264

The Data Processing Unit QM 200 has been especially designed to process measurement data generated by a profile projector or measuring microscope.
The QM-Data 200 offers you the following benefits:

- Measuring instructions, measuring values and calculation results for various operations are shown on the back-lit LCD in a clear, easy to understand style.
- You can also print measuring results, either on a small and convenient thermal printer (available as a special option) or on an ESC/P printer and continuous paper.
- By connecting an optional floppy disk drive newly created part programs, you can store and/or load measurement results as well as calculation results.

Stand-mount type

Arm-mount type

Specifications

Resolution	1 / 0,1 µm
Dimensions [mm]	260 x 242 x 310 : Stand-mount type 318 x 153 x 275 : Arm-mount type
Screen	Colour graphic TFT LCD (320 x 240 dots, with background lighting)
Power supply	100/240V AC, 50/60 Hz
Program functions	Part program creation, execution, editing
Statisical processing	Number of data, maximum value, minimum value, mean value, standard deviation, range, histogram
Data output	USB, RS-232C, Printer
Display language	Japanese/English/German/French/Italian/Spanish/Portuguese/Chech/Traditional Chinese/Simplified Chinese/Korean/Turkish/Swedish/Polish/Dutch/Hungarian
Measuring of Geometric Elements	Maximum of 1000 elements, point, line, circle, distance, ellipse, rectangular hole, slotted hole, intersection and intersecting angle and point & angle, plus a number of functions for evaluation, e.g. perpendicularity and parallelism are provided.
Measurement result file output	CSV format; MUX-10F format
Functions	**Mitutoyo's AI Function :** The AI function (AI=Artificial Intelligence) renders choosing the element type before measuring obsolete. Point measurements are analysed by the QM-Data and the results for basic elements calculated, thus accelerating the measuring procedure. **Customized Operation :** Macro functions and the creation of part programs speed up single and repetition measurements. Additionally macro commands and part programs as well as frequently used standard operations can be stored as user menus.
Data input	USB, RS-232C, X/Y/Z-axis signal, Footswitch

Optional accessories

No.	Description
12AAD033	Printer, Receipt printer QM-Data 200, 230V
908353-1	Printer paper, 1 roll
I-1525612	Cable FX-85 IBM
937179T	Footswitch for SPC
12AAA807D	Cable RS-232C 2m
011119	Cable RS-232C, D-SUP25 to D-SUB9, 2m

No.	Mass [kg]	Description
264-155D	2,9	Stand-mount type
264-156D	2,8	Arm-mount type
264-159D	2,9	Stand-mount type for Hyper MF / MF-U

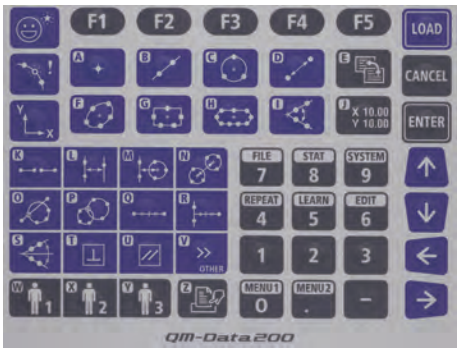

Intuitive panel design

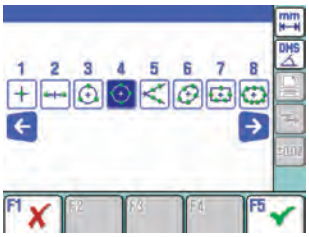

Clear function icons

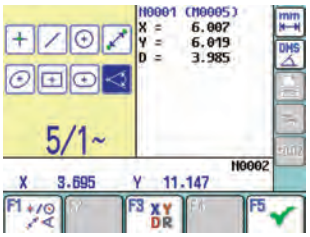

Coloured LCD display with backlight

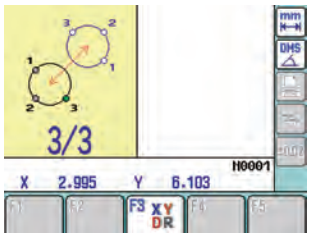

Guided measurements

All products to be sold to commercial customers. Product illustrations are without obligation. Product descriptions, in particular any and all technical specifications, are only binding when explicitly agreed upon. For suggested retail prices, please refer to the separate price list.

Edge Detection Sensor OPTOEYE 200

Series 332

This edge sensor allows you to make accurate measurements whatever your skill level by automatically detecting edges used in measurement.
The Optoeye 200 offers you the following benefits:

- Optoeye 200 reduces the effect of operator skill level on accuracy by automatically detecting edges used in measurement.
- PJ-H30: You can use the Optoeye edge detector on models PJ-H30A (requires adapter plate 12AAG983). The PJ-H30D models have a built-in edge detector.
- PV-5110, PJ-3515F and PJ-A14: You can use the Optoeye edge detector in conjunction with the QM-Data 200.
- PJ-A3000: You can use the Optoeye edge detector on models 302-701/302-702/302-703 in conjunction with the QM-Data 200.
- When you are using the Optoeye all projector scales must be connected to QM-Data 200 directly and built-in counters can no longer be used (except PJ-H30D type).

332-151

No.	Description
332-151	Edge detection sensor OPTOEYE 200

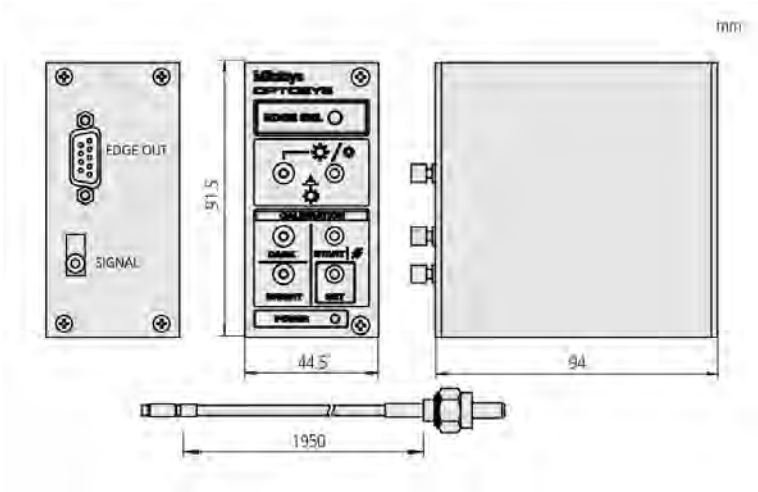

Specifications

Image detection	Directivity : All directions
Min. diameter	2 mm on the screen
Min. width	1 mm on the screen
Applicable illumination	Type : Surface/Contour illumination Range : 30 to 2000 Lux on the screen Bright-Dark field difference : 20 Lux
Function	Automatic detection of feature edges for use in measurement

Optional accessories

No.	Description
12AAE671	Attachment, Optoeye-200 Attachment A, 250-350 mm
12AAE672	Attachment, Optoeye-200 Attachment B, 500-600 mm

All products to be sold to commercial customers. Product illustrations are without obligation. Product descriptions, in particular any and all technical specifications, are only binding when explicitly agreed upon. For suggested retail prices, please refer to the separate price list.

Accessories for Measuring Projectors

Additional Specifications

Grid divisions	10X : 0,1 mm 20X : 0,05 mm 50X : 0,02 mm 100X : 0,01 mm

Group 1

For measuring projectors

These standard overlay charts increase the range of application and the efficiency of Mitutoyo profile projectors.

This chart set offers you the following benefits:

- The charts are supplied in sizes ø250, 300, 340, 500 and 600 mm to suit the screens of Mitutoyo projectors.
- A large range of scales and profiles is provided that enables you to test workpiece features quickly and easily. You can test length, height, parallelism, angle, radius, taper, bore position, diameter, as well as all standardized thread and tooth profiles.
- All charts are made of a distortion-free special plastics compound and are provided with a protective coating.

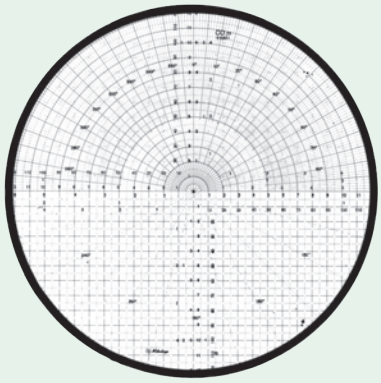

Combination chart

Combination chart

Angle : Divisions at 10° and 30' intervals at **178mm**/7" diameter increasing to **381mm**/15" intervals at **279mm**/11" diameter.

Features : All purpose chart for checking diameters, angles, radii and linear divisions

No.	Diameter [mm]
512651	250
512652	300
512653	340
512654	500
512655	600

Grid/protractor chart

Grid/protractor chart

Angle : 15° increments

Features : Ideal for checking diameters, concentricity of diameters, radii, angles and cams.

No.	Diameter [mm]
201380	250
201386	300
201392	340
512621	500
511843	600

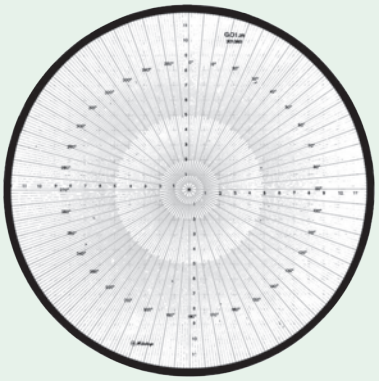

Radius/protractor chart

Radius/protractor chart

Angle : Divisions at 1° and 30' intervals at **178mm**/7" diameter increasing to **381mm**/15" intervals at **279mm**/11" diameter.

Features : Ideal for checking diameters, concentricity of diameters, radii, angles, radii and cams

No.	Diameter [mm]
201383	250
201389	300
201395	340
512624	500
511846	600

All products to be sold to commercial customers. Product illustrations are without obligation. Product descriptions, in particular any and all technical specifications, are only binding when explicitly agreed upon. For suggested retail prices, please refer to the separate price list.

Mitutoyo

Accessories for Measuring Projectors

Group 1

For measuring projectors

These standard overlay charts increase the range of application and the efficiency of Mitutoyo profile projectors.

This chart set offers you the following benefits:

- The charts are supplied in sizes ø250, 300, 340, 500 and 600 mm to suit the screens of Mitutoyo projectors.
- A large range of scales and profiles is provided that enables you to test workpiece features quickly and easily. You can test length, height, parallelism, angle, radius, taper, bore position, diameter, as well as all standardized thread and tooth profiles.
- All charts are made of a distortion-free special plastics compound and are provided with a protective coating.

Additional Specifications

Grid divisions	10X : 0,1 mm 20X : 0,05 mm 50X : 0,02 mm 100X : 0,01 mm

Involute gear teeth

No.	Diameter [mm]
201385	250
201391	300
201397	340
512626	500
511848	600

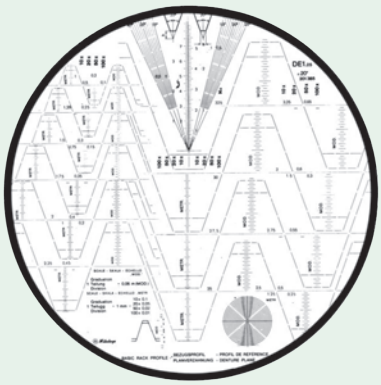

Involute gear teeth

ISO Metric threads

No.	Diameter [mm]
201384	250
201390	300
201396	340
512625	500
511847	600

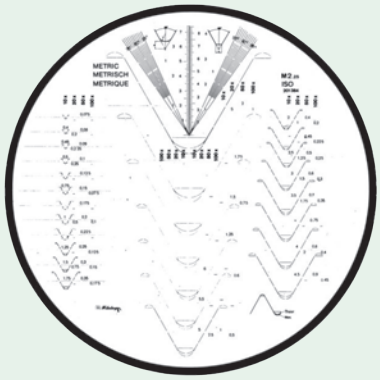

ISO Metric threads

Protractor chart

Angle **:** Divisions at 1° and 30' intervals at **178mm**/7" diameter increasing to **381mm**/15' intervals at **279mm**/11" diameter.
Features : Dedicated chart especially designed for checking angles with exceptional clarity. Suitable for use at any magnification.

No.	Diameter [mm]
201381	250
201387	300
201393	340
512622	500
511844	600

Protractor chart

Radius chart

Features : Dedicated chart especially designed for checking radii, diameters and concentricity with exceptional clarity.

No.	Diameter [mm]
201382	250
201388	300
201394	340
512623	500
511845	600

Radius chart

All products to be sold to commercial customers. Product illustrations are without obligation. Product descriptions, in particular any and all technical specifications, are only binding when explicitly agreed upon. For suggested retail prices, please refer to the separate price list.

Accessories for Measuring Projectors

Group 2 - Makes inspection of projected images an easy process.

Optional accessories

No.	Description
12AAM027	Overlay chart set, for Measuring Projector No. 11-22

Metric

Description	ø 300 mm No.
Concentric circles 1 mm pitch	12AAM589
Concentric circles at 1 mm pitch with radial index 1° increments	12AAM596
Crossed lines with 0,5 mm pitch	12AAM592
Crossed lines with 1 mm graduation and concentric circles 5 mm pitch	12AAM588
Grid chart (10 x 10 mm)	12AAM591
Grid chart (1 mm pitch)	12AAM593
Horizontal for 20X, vertical for 50X with 1 mm graduations	12AAM590
Horizontal lines 1 mm pitch	12AAM595
Metric threads 0,075 - 0,225 mm, 100X involute gear teeth : 20° MOD 0,2-1, 14,5° MOD 0,2-1	12AAM598
Metric threads 0,2-2 mm, unified threads 28-12 TPI 20X Whitworth threads 20-10 TPI 20X	12AAM597
Radial index 1° increments	12AAM594
Radial index 1° increments (upper) concentric circle 1 mm pitch (lower)	12AAM587

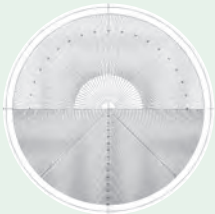
12AAM587

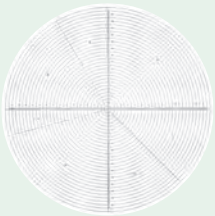
12AAM588

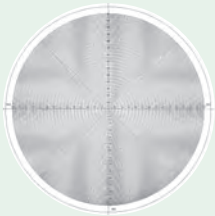
12AAM589

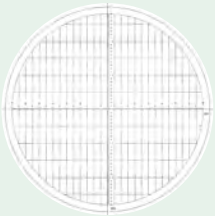
12AAM590

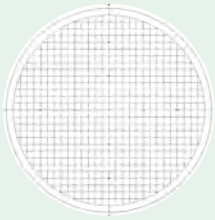
12AAM591

12AAM592

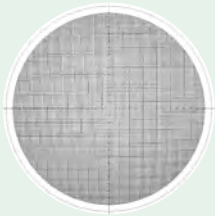
12AAM593

12AAM594

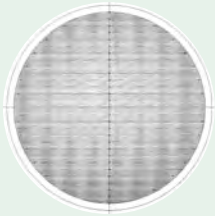
12AAM595

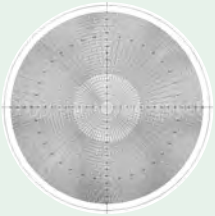
12AAM596

12AAM597

12AAM598

All products to be sold to commercial customers. Product illustrations are without obligation. Product descriptions, in particular any and all technical specifications, are only binding when explicitly agreed upon. For suggested retail prices, please refer to the separate price list.

Mitutoyo

Accessories for Measuring Projectors

Workpiece Fixtures

For Profile Projectors and Measuring Microscopes

Centre Support

No.	Max. workpiece height [mm]	Mass [kg]
172-142	120	3,3

Centre Support Riser

No.	Max. workpiece height [mm]	Mass [kg]
172-143	240	3,3

Holder with Clamp

No.	Max. workpiece height [mm]	Mass [kg]
176-107	35	0,42

Rotary Tables

No.	Effective glass dia. [mm]	Angular resolution °	Fine feed	Mass [kg]
176-106	66	6		1,7
172-198	96	1	Available	2,4
172-196	100	1		2,5
176-305	182		Available	5,5
176-306	238		Available	6,5

Rotary Vice

No.	Rotary range	Width of jaws [mm]	Angle graduations °	Max. workpiece height [mm]	Mass [kg]
172-144	360°	40	5	60	2,8

Swivel Centre Support

No.	Max workpiece dia. [mm]	Swivel range	Max. workpiece length [mm]	Mass [kg]
176-105	70 (45) when swiveled 10°	±10°	140	2,4
172-197	80 (65) when swiveled 10°	±10°	140	2,5

V-Block with Clamp

No.	Max workpiece dia. [mm]	Width of block [mm]	Mass [kg]
172-378	25	41	0,8
172-234	50	60	1,24

Vertical Holder

No.	Mass [kg]
172-132	1,3

172-142

172-143

176-107

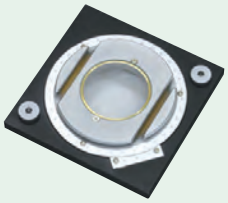

176-106

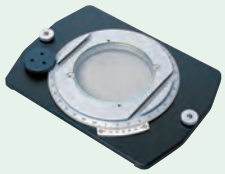

172-198

172-144

172-197

172-234 - 172-378

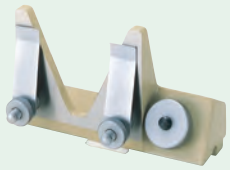

172-132

All products to be sold to commercial customers. Product illustrations are without obligation. Product descriptions, in particular any and all technical specifications, are only binding when explicitly agreed upon. For suggested retail prices, please refer to the separate price list.

Surface Roughness Measuring Instruments
Surftest
Page 480

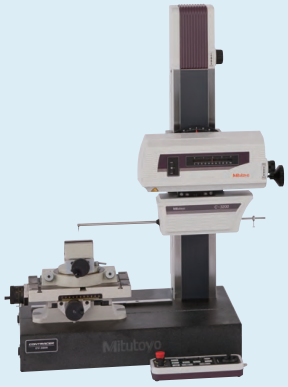

Contour Measuring Instruments
Contracer
Page 495

Surface Roughness & Contour Measuring Instruments
Formtracer
Page 499

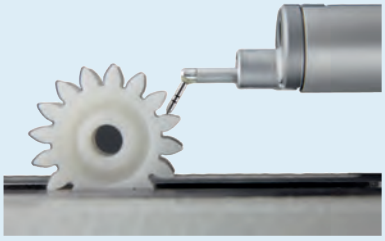

Accessories Surftest, Contracer, Formtracer
Page 508

Form Measuring Instruments
Roundtest
Page 519

All products to be sold to commercial customers. Product illustrations are without obligation. Product descriptions, in particular any and all technical specifications, are only binding when explicitly agreed upon. For suggested retail prices, please refer to the separate price list.

Surftest SJ-210

Series 178 - Portable Surface Roughness Measuring Instrument

This is a portable measuring instrument that allows you to easily and accurately measure surface roughness.
The Surftest SJ-210 offers you the following benefits:

- It works independently of mains power, allowing you to make on-site measurements.
- The **6 cm** [2,4"] colour graphic, back-lit LCD gives you excellent readability.
- It performs roughness analyses conform to various international standards (EN ISO, VDA, ANSI, JIS) and customized settings.
- Different drivers expanding the range of applications.
- Calculation results, assessed profiles, bearing and amplitude curves can be displayed.
- Support of 21 languages.
- Operation by keys on the front and under the sliding cover.

SJ-210

Metric — Switchable between 16 languages: Japanese, English, German, French, Italian, Spanish, Portuguese, Czech, Polish, Hungarian, Turkish, Swedish, Dutch, Korean, Traditional Chinese, Simplified Chinese

No.	Detector measuring force [mN]	Stylus Tip angle	Stylus Tip radius [µm]	Description	Mass
178-560-01D	0,75	60°	2	SJ-210 model	500g
178-562-01D	0,75	60°	2	SJ-210R model	500g
178-564-01D	0,75	60°	2	SJ-210S model	500g

Metric — Switchable between 16 languages: Japanese, English, Russian, Slovenian, Rumanian, Bulgarian, Finnish, German, French, Italian, Spanish, Czech, Polish, Hungarian, Turkish, Swedish

No.	Detector measuring force [mN]	Stylus Tip angle	Stylus Tip radius [µm]	Description	Mass
178-560-03D	0,75	60°	2	SJ-210 model	500g

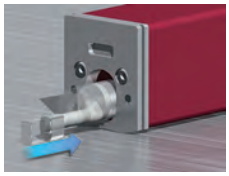

Standard

R-type

S-type

Specifications

Drive unit	
Measuring range	16 mm 4,8 mm [S-type]
Traverse	17,5 mm 5,6 mm [S-type]
Measuring speed	0,25 mm/s ; 0,5 mm/s; 0,75 mm/s
Detector	
Measuring method	Differential inductance
Range	360 µm
Stylus	Diamond Tip
Skid radius	40 mm
Display unit	
Profiles	Roughness Profile (R), R-Motif, DF-Profile and more
Roughness standard	EN ISO, VDA, JIS, ANSI and customize settings
Digital filter	Gauss, 2CR75, PC75
Cut-off length	λc : 0,08 mm; 0,25 mm; 0,8 mm; 2,5 mm λs : 2,5 µm; 8 µm
Tolerance	Coloured upper / lower limit
Interface	USB, Digimatic, RS-232C, Foot switch
Power supply	AC adapter or rechargeable battery

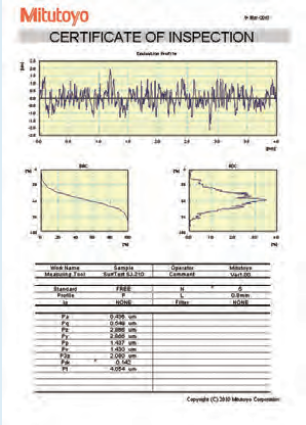

Software
USB COMMUNICATION TOOL
as a free download on www.mitutoyo.eu
registration required
(refer to page
Optional Software USB Communication Tool)

Refer to Surftest SJ-210 brochure

Scan QR Code with your mobile device and watch our product videos on YouTube

All products to be sold to commercial customers. Product illustrations are without obligation. Product descriptions, in particular any and all technical specifications, are only binding when explicitly agreed upon. For suggested retail prices, please refer to the separate price list.

Surftest SJ-210

Series 178 - Portable Surface Roughness Measuring Instrument

The SJ-210R – Retract System is a portable measuring instrument for surface roughness that includes a safety system.

- The detector starts in a safety position, not in contact with the workpiece surface. When measurement starts, the detector is lowered onto the workpiece while the drive unit moves in X measuring direction. During the return movement, the detector lifts up from the workpiece surface before returning to the start position. This is useful for avoiding stylus damage in applications where you cannot easily see the test surface.

SJ-210S (detailed information further on in this chapter)

- The SJ-210S model is a portable measuring instrument for surface roughness that has a transverse drive capability. This allows you to test shrouded surfaces in the transverse direction, such as crankshaft bearing surfaces, flanged features or deep grooves.

SJ-210

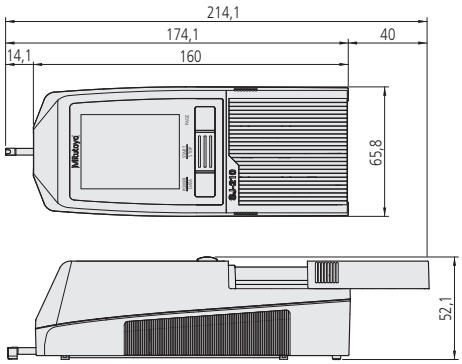

Dimensions

178-029 (displayed with SJ-210)

Additional Specifications

Optional accessories	Other optional and standard accessories are listed later in this section.

Optional accessories

No.	Description
178-029	Granite Stand, for SJ-210/SJ-310*
178-033	Measuring device-cylindrical workpieces
178-034	Measuring device as universal fixture
178-035	Measuring device for measuring inside Ø
12AAA221	Adapter for magnetic stand, for SJ-210/310*
178-230-2	Standard drive unit 17,5mm, for SJ-210/ SJ-310
178-235	R-type drive unit 17,5mm, for SJ-210/ SJ-310
178-233-2	S-type drive unit 5,6mm, for SJ-210/ SJ-310
936937	Digimatic Cable, Flat 10-Pin Type, 1 m
965014	Digimatic Cable, Flat 10-Pin Type, 2 m
02AZD790D	U-WAVE T Connection Cable D, Flat 10-Pin Type
06ADV380D	USB Input Tool Direct (Digimatic USB) cable, Flat 10-Pin Type, 2 m
12BAA303	Connecting cable for extension 1 m

* 12AAA221 is needed for SJ-210 / SJ-310

Keyboard protective cover open

Back view

All products to be sold to commercial customers. Product illustrations are without obligation. Product descriptions, in particular any and all technical specifications, are only binding when explicitly agreed upon. For suggested retail prices, please refer to the separate price list.

Surftest SJ-310

Series 178 - Portable Surface Roughness Measuring Instrument

This is a portable measuring instrument that allows you to easily and accurately measure surface roughness.
The Surftest SJ-310 offers you the following benefits:

- Skid system with touch-screen functionality and built-in printer.
- It works independently of mains power, allowing you to make on-site measurements.
- Easy and intuitive menu navigation.
- The large **14,5cm** [5,7"] colour LCD gives you high visibility.
- It performs roughness analyses conform to various international standards (EN ISO, VDA, ANSI, JIS) and customized settings.
- You can store up to 10 different measuring conditions inside the SJ-310, and up to 500 with an optional SD card.
- Statistical analysis and coloured tolerance judgement.
- 2 different evaluation conditions within 1 measurement adjustable.
- You can separately password protect many functions.
- It comes with support for 16 languages.

SJ-310

Metric

No.	Detector measuring force [mN]	Stylus Tip angle	Stylus Tip radius [µm]	Description	Mass
178-570-01D	0,75	60°	2	SJ-310 model	1,7 kg
178-572-01D	0,75	60°	2	SJ-310R model	
178-574-01D	0,75	60°	2	SJ-310S model	

Standard

R-type

S-type

Specifications

Drive unit	
Measuring range	16 mm 4,8 mm [S-type]
Traverse	17,5 mm 5,6 mm [S-type]
Measuring speed	0,25 mm/s; 0,5 mm/s; 0,75 mm/s
Detector	
Measuring method	Differential inductance
Range	360 µm
Stylus	Diamond Tip
Skid radius	40 mm
Display unit	
Profiles	Roughness Profile (R), R-Motif, DF-Profile and more
Roughness standard	EN ISO, VDA, JIS, ANSI and customize settings
Digital filter	Gauss, 2CR75, PC75
Cut-off length	λc : 0,08 mm; 0,25 mm; 0,8 mm; 2,5 mm; 8 mm λs : 2,5 µm; 8 µm
Printer	Thermal Printer
Tolerance	Coloured upper / lower limit
Interface	USB, Digimatic, RS-232C, Foot switch
Power supply	AC adapter or rechargeable battery

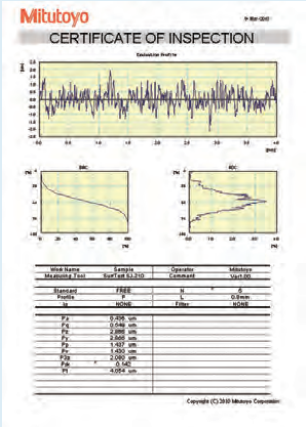

Software
USB COMMUNICATION TOOL
as a free download on www.mitutoyo.eu
registration required
(refer to page
Optional Software USB Communication Tool)

Refer to Surftest SJ-310 brochure

Scan QR Code with your mobile device and watch our product videos on YouTube

All products to be sold to commercial customers. Product illustrations are without obligation. Product descriptions, in particular any and all technical specifications, are only binding when explicitly agreed upon. For suggested retail prices, please refer to the separate price list.

Surftest SJ-210 and SJ-310 - S-Type

Series 178 – Portable Transverse Measurement with S-Type Drive Unit

This is an S-Type drive unit for the Surftest SJ-210 and SJ-310 that provides portable transverse measurement.
It offers you the following benefits:

- It is compatible with the conventional drive units of the Surftest SJ-210 and SJ-310.
- You can simply connected it to the display unit.
- A typical application would be to position the S-Type unit on a crankshaft journal bearing, as shown in the photograph below. Once started the S-Type drive will track the stylus across the surface transversely to its own axis and reliably measure surface roughness in the direction of the crankshaft axis. Transverse tracking simplifies the measurement of surface roughness even in very confined situations, which has long been a problem with conventional instruments which allow only longitudinal measurement.

Specifications

Traverse	5,6 mm
Measuring speed	0,25 mm/s; 0,5 mm/s; 0,75 mm/s

Optional accessories

No.	Description
178-029	Granite Stand, for SJ-210/SJ-310*
12AAA221	Adapter for magnetic stand, for SJ-210/310*
178-230-2	Standard drive unit 17,5mm, for SJ-210/ SJ-310
178-235	R-type drive unit 17,5mm, for SJ-210/ SJ-310
178-233-2	S-type drive unit 5,6mm, for SJ-210/ SJ-310

*12AAA221 is needed for SJ-210 / SJ-310

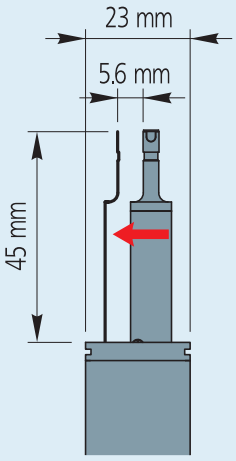

Linear movement of S-Type

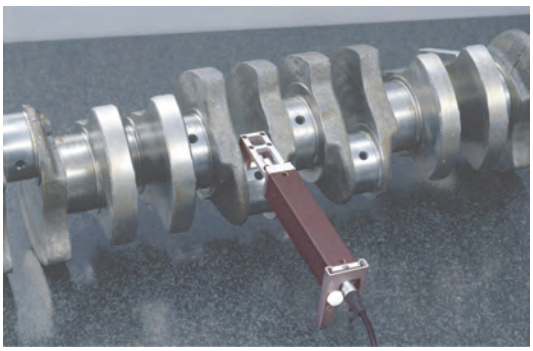

S - Type Drive Unit Set: [incl. 178-233-2 - 12AAE644 - 12AAE643]

No.	Traverse	Detector measuring force [mN]	Stylus Tip angle	Stylus Tip radius [µm]
178-234-2	5,6 mm	0,75	60°	2

12AAE644
V-type adapter

12AAE643
Point - contact adapter

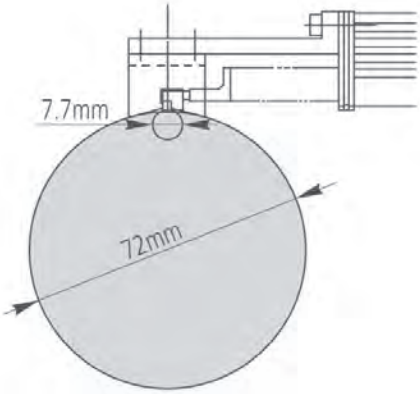

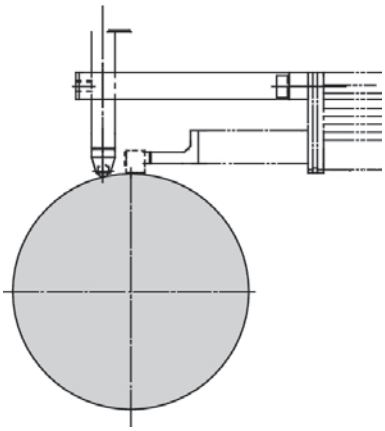

All products to be sold to commercial customers. Product illustrations are without obligation. Product descriptions, in particular any and all technical specifications, are only binding when explicitly agreed upon. For suggested retail prices, please refer to the separate price list.

Mitutoyo

Accessories for SJ-210 and SJ-310

Series 178 - Standard and Optional Accessories for Surftest SJ-210 / SJ-310

Model		Surftest SJ-210		Surftest SJ-210R		Surftest SJ-210S		Surftest SJ-310		Surftest SJ-310R		Surftest SJ-310S	
No.	Description	Std	Opt	Std	Opt	Std	Opt	Std	Opt	Std	Opt	Std	Opt
12AAA210	Extension rod length 50 mm		●		●				●		●		
12AAA216	Height adjustment feet		●		●			●					
12AAA217	Nosepiece (flat)		●		●			●		●			
12AAA218	Nosepiece (cylindrical)		●		●			●		●			
12AAA219	Adapter for vertical position		●		●				●		●		
12AAA221	Adapter for magnetic stand		●		●		●		●		●		●
12AAA222	Height gauge adapter		●		●		●		●		●		●
12AAD510	USB cable for SJ-310 / SJ-410								●		●		●
12AAE643	Point - contact adapter					●						●	
12AAE644	V-type adapter					●						●	
12AAJ088	Footswitch		●		●		●		●		●		●
12AAL066	Protective sheets for display (5 sheets)		●		●		●						
12AAL067	RS-232C cable for printer		●		●		●						
12AAL068D	USB cable for SJ-210		●		●		●						
12AAL069	Memory card		●		●		●		●		●		●
12AAN040	Protective film								●		●		●
12AAN046	Battery							●		●		●	
12BAA303	Connecting cable for extension 1 m	●		●		●			●		●		●
12BAG834	Touch pen							●		●		●	
12BAK700	Calibration table	●		●		●		●		●		●	
12BAK728	AC adapter 9V	●		●		●							
12BAL402	Touch Panel Protection							●		●		●	
357651	AC Adapter 12V							●		●		●	
178-029	Granite stand		●		●		●		●		●		●
178-230-2	Standard Drive unit 17,5 mm	●			●		●	●			●		●
178-233-2	S-Type drive unit 5,6 mm		●		●	●			●		●	●	
178-235	R-Type drive unit 17,5 mm		●	●			●		●	●			●
178-296	Standard detector 2 µm; 0,75 mN	●		●				●		●			
178-383	Detector for small holes Ø4,5 mm; 2 µm; 0,75 mN		●		●				●		●		
178-384	Detector for small holes Ø2,8mm		●		●				●		●		
178-385	Deep groove detector 2 µm; 0,75 mN		●		●				●		●		
178-386	Detector for S-drive 5 µm; 4 mN		●		●	●			●		●	●	
178-387	Detector for S-drive 2 µm; 0,75 mN		●		●	●			●		●	●	
178-388	Detector for gear tooth surface 2 µm; 0,75 mN		●		●				●		●		
178-390	Detector 5 µm; 4 mN		●		●				●		●		
178-391	Detector for soft materials 10 µm; 4 mN		●		●				●		●		
178-392	Detector for small holes Ø4,5 mm; 5 µm; 4 mN		●		●				●		●		
178-393	Detector for small holes Ø2,8 mm; 5 µm; 4 mN		●		●				●		●		
178-394	Deep groove detector 5 µm; 4 mN		●		●				●		●		
178-398	Detector for geartooth surface 5 µm; 4 mN; 90°		●		●				●		●		
178-421DDS	Printer set for SJ-210		●		●		●						
178-601	Roughness specimen Ra 3 µm	●		●			●	●		●		●	
178-604	Roughness specimen Ra 0,4 µm /3 µm		●		●		●		●		●		●
178-605	Roughness specimen Ra 1 µm		●		●	●			●		●	●	
270732	Printer papers (5 rolls)		●		●		●	●		●		●	

All products to be sold to commercial customers. Product illustrations are without obligation. Product descriptions, in particular any and all technical specifications, are only binding when explicitly agreed upon. For suggested retail prices, please refer to the separate price list.

Accessories for SJ-210 and SJ-310

Optional accessories

No.	Description
178-033	Measuring device-cylindrical workpieces
178-034	Measuring device as universal fixture
178-035	Measuring device for measuring inside Ø

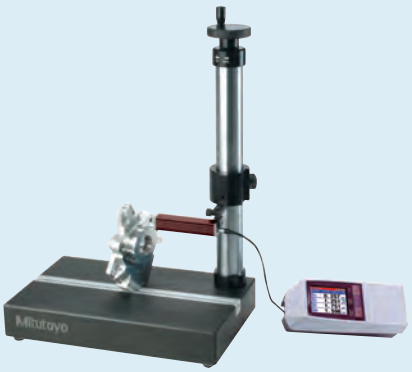

178-029
(displayed with 12AAA221 + SJ-210)

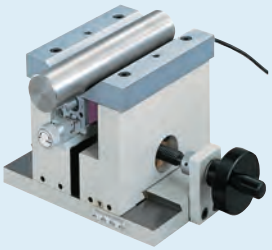

178-033

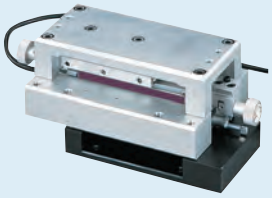

178-034

178-035

Series 178

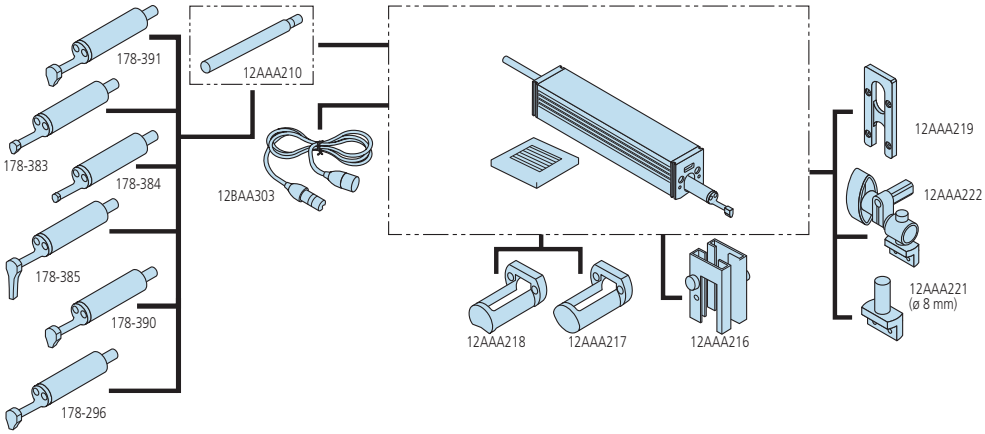

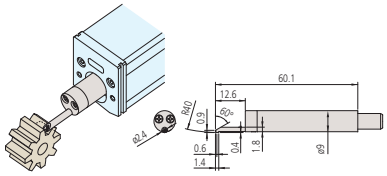

178-388/178-398

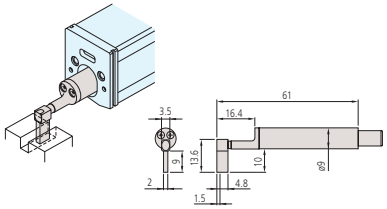

178-385/178-394

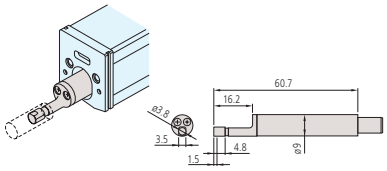

178-383/178-392

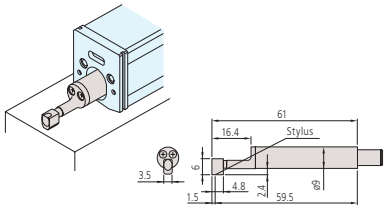

178-390/178-387
178-296/178-386

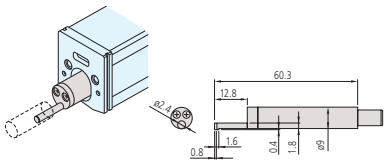

178-384/178-393

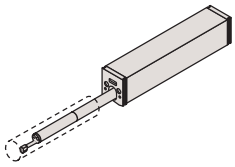

12AAA210

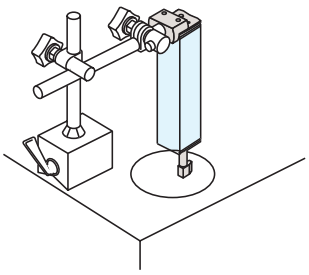

12AAA221

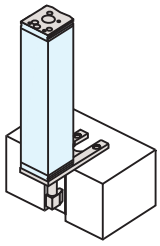

12AAA219

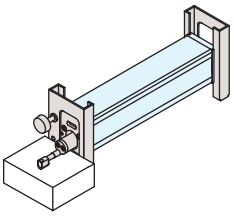

12AAA216

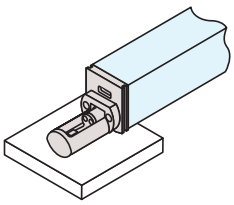

12AAA217

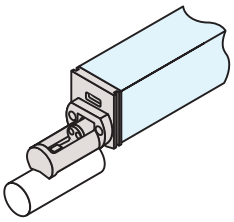

12AAA218

All products to be sold to commercial customers. Product illustrations are without obligation. Product descriptions, in particular any and all technical specifications, are only binding when explicitly agreed upon. For suggested retail prices, please refer to the separate price list.

Mitutoyo

Surftest SJ-410

Series 178 - Portable Surface Roughness Measuring Instrument

This is a portable measuring instrument that allows you to easily and accurately measure surface roughness.
The Surftest SJ-410 offers you the following benefits:

- Skidless system with touch-screen functionality and built-in printer.
- It works independently of mains power, allowing you to make on-site measurements.
- Easy and intuitive menu navigation.
- The large **14,5cm** [5,7"] colour LCD gives you high visibility.
- The skidless detector allows you to measure the primary profile (P), roughness profile (R), waviness profile (W) and more.
- Surface compensation of curved, radial and tilted surfaces.
- It performs roughness analyses conform to various international standards (EN ISO, VDA, ANSI, JIS) and customized settings.
- You can store up to 10 different measuring conditions inside the SJ-410, and up to 500 with an optional SD card.
- It allows two different evaluation conditions within one measurement adjustable.
- You can separately password protect many functions.
- It comes with support for 16 languages.
- Available options include an auto-set unit, X-axis fine adjustment and digital levelling unit.

SJ-410

Surftest SJ-411
Traverse : 25 mm
Traverse straightness : 0,3 µm / 25 mm

No.	Detector measuring force [mN]	Stylus Tip angle	Stylus Tip radius [µm]
178-580-01D	0,75	60°	2
178-580-02D	4	90°	5

Surftest SJ-412
Traverse : 50 mm
Traverse straightness : 0,5 µm / 50 mm

No.	Detector measuring force [mN]	Stylus Tip angle	Stylus Tip radius [µm]
178-582-01D	0,75	60°	2
178-582-02D	4	90°	5

Specifications

Drive unit	
Traverse	SJ-411: 25 mm SJ-412: 50 mm
Measuring speed	0,05 mm/s; 0,1 mm/s; 0,2 mm/s; 0,5 mm/s; 1 mm/s
Detector	
Measuring method	Skidless - Differential inductance
Range	800 µm; 80 µm; 8 µm (up to 2,4 mm with an optional stylus)
Positioning	±1,5° (tilting), 10 mm (up/down)
Display unit	
Profiles	Primary Profile (P), Roughness Profile (R), Waviness (W), MOTIF (R, W) and more
Standard	EN ISO, VDA, JIS, ANSI and customize settings
Analysis graphs	BAC, ADC
Digital filter	Gauss, 2CR75, PC75
Cut-off length	λc : 0,08 mm; 0,25 mm; 0,8 mm; 2,5 mm; 8 mm λs : 2,5 µm; 8 µm; 25 µm
Printer	Thermal Printer
Tolerance	Coloured upper / lower limit
Interface	USB, Digimatic, RS-232C, Foot switch
Power supply	AC adapter or rechargeable battery

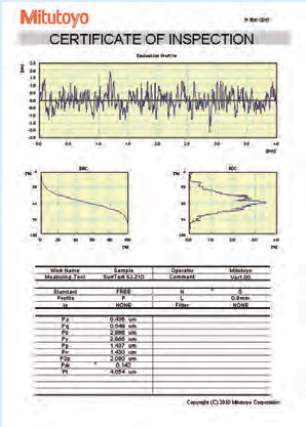

Software
USB COMMUNICATION TOOL
as a free download on www.mitutoyo.eu
registration required
(refer to page
Optional Software USB Communication Tool)

Refer to Surftest SJ-410 brochure

Scan QR Code with your mobile device and watch our product videos on YouTube

All products to be sold to commercial customers. Product illustrations are without obligation. Product descriptions, in particular any and all technical specifications, are only binding when explicitly agreed upon. For suggested retail prices, please refer to the separate price list.

Surftest SJ-410

Series 178 - Portable Surface Roughness Measuring Instrument

Additional Specifications

Optional accessories	Other optional and standard accessories are listed later in different sections for accessories and styli.

Optional accessories

No.	Description
178-396-2	Detector, 0,75mN
178-397-2	Detector, 4mN
178-047	Three-axis adjustment table
178-048	Leveling table D.A.T
178-042-1	Digimatic XY leveling table, 25mmx25mm
178-043-1	XY leveling table, 25mmx25mm
178-605	Roughness specimen, Ra 1µm
178-610	Step gauge, (1, 2, 5, 10)µm
178-611	Step gauge, mm, (2, 10)µm
178-019	Precision Vice
12AAB358	Cylinder attachment Ø15-60mm
936937	Digimatic Cable, Flat 10-Pin Type, 1 m
965014	Digimatic Cable, Flat 10-Pin Type, 2 m
02AZD790D	U-WAVE T Connection Cable D, Flat 10-Pin Type
12AAD510	Signal cable (USB)
12AAL069	Memory card, for 178
Stands	
178-039	Granite stand, for SJ-410
178-093	Desktop vibration isolation stand

Consumable spares

No.	Description
12AAB355	Nosepiece skidless type
12BAG834	Touch pen
12BAL402	Touch Panel Protecting Sheet
12AAN046	Replacement battery, Replacement
270732	Printer paper, 5 rolls, for SJ-301

Deep groove measurement

R-surface measurement

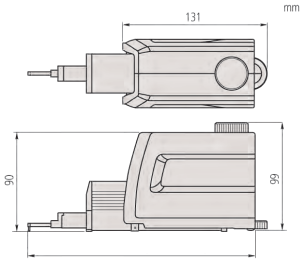

SJ-411: 207,5 mm / SJ-412: 234 mm
Drive unit

Optional:
- Autoset unit 178-010
- X-axis adjustment 178-020
- Tilting adjustment unit 178-030

Scope of delivery

178-048
Leveling table D.A.T.

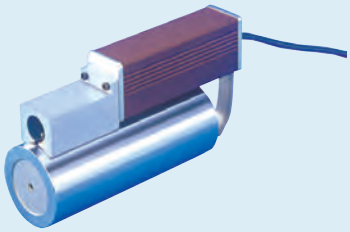

12AAB358
Cylinder attachment

178-039
(displayed with SJ-411)

All products to be sold to commercial customers. Product illustrations are without obligation. Product descriptions, in particular any and all technical specifications, are only binding when explicitly agreed upon. For suggested retail prices, please refer to the separate price list.

Mitutoyo

Surftest SJ-500

Series 178 - Surface Roughness Measuring Instrument

This is a measuring instrument that allows you to easily and accurately measure surface roughness. The Surftest SJ-500 offers you the following benefits:

- The skidless detector allows you to measure the primary profile (P), roughness profile (R), waviness profile (W) and more.
- User friendly control unit for high precision surface roughness measurement.
- The large **19cm** [7,5"] colour TFT LCD with touch-screen functionality gives you high visibility and ease of use.
- The display menu is easy to read and simple to operate.
- It performs roughness analyses conform to various international standards (EN ISO, VDA, ANSI, JIS) and customized settings.
- The built-in joystick on the control unit enables quick and easy positioning. The manual adjustment knob allows you to finely position a small stylus to measure the inside surface of small holes.
- The detector unit allows a 90° displacement of the stylus, which is ideal for crankshaft and narrow space measurement.
- You can use the instrument stand-alone or mounted on a stand.

SJ-500

No.	Detector measuring force [mN]	Stylus Tip angle	Stylus Tip radius [µm]
178-532-02D	4	90°	5
178-532-01D	0,75	60°	2

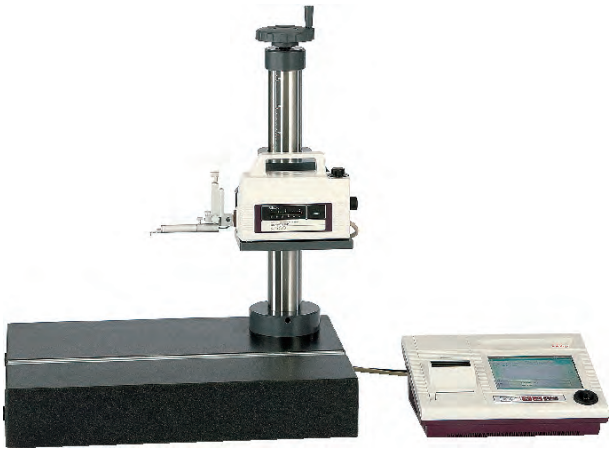

SJ-500 with optional manual column stand

Preview

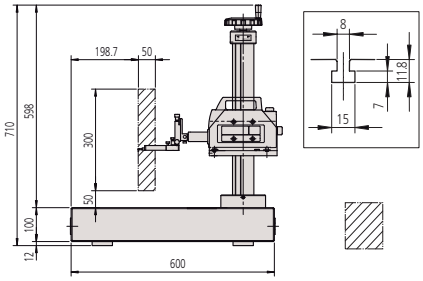

178-085
600x450x710 mm

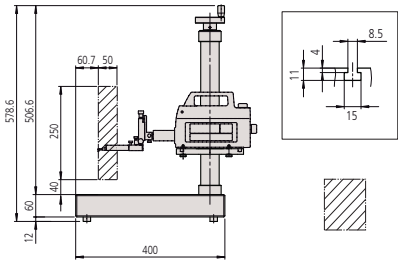

178-089
400x250x578 mm

Specifications

Drive unit	
Traverse	50 mm
Measuring speed	0,02 - 5 mm/s
Drive speed	0 - 20 mm/s or joystick operation
Traverse straightness	0,2 µm / 50 mm
Detector	
Measuring method	Skidless - Differential inductance
Range	800 µm; 80 µm; 8 µm (up to 2,4 mm with an optional stylus)
Positioning	±1,5° (tilting) 30 mm (up/down)
Display unit	
Profiles	Primary Profile (P), Roughness Profile (R), Waviness (W), MOTIF (R, W) and more
Standard	EN ISO, VDA, JIS, ANSI and customize setting
Analysis graphs	BAC, ADC
Digital filter	Gauss, 2CR75, PC75, RobustSpline
Cut-off length	λc : 0,025 mm; 0,08 mm; 0,25 mm; 0,8 mm; 2,5 mm; 8 mm; 25 mm λs : 0,25 µm; 0,8 µm; 2,5 µm; 8 µm; 25 µm; 80µm; 250µm; None λf : 0,08mm; 0,25mm; 0,8mm; 2,5mm; 8mm; 25mm; None
Printer	Thermal printer

Optional accessories

No.	Description
178-396-2	Detector, 0,75mN
178-397-2	Detector, 4mN
178-085	Granite stand for SJ-500
178-089	Column stand
178-047	Three-axis adjustment table
178-048	Leveling table D.A.T
178-042-1	Digimatic XY leveling table, 25mmx25mm
178-043-1	XY leveling table, 25mmx25mm
12AAG202	Extension rod, 50mm
12AAG203	Extension rod, 100mm
178-093	Desktop vibration isolation stand

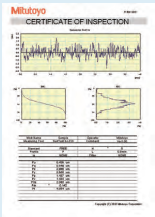

Software
USB COMMUNICATION TOOL
as a free download on www.mitutoyo.eu
registration required
(refer to page
Optional Software USB Communication Tool)

Refer to SURFACE MEASUREMENT brochure

All products to be sold to commercial customers. Product illustrations are without obligation. Product descriptions, in particular any and all technical specifications, are only binding when explicitly agreed upon. For suggested retail prices, please refer to the separate price list.

Surftest SV-2100

Series 178 - Surface Roughness Measuring Instrument

This is a stationary measuring instrument that allows you to easily and accurately measure surface roughness.
The Surftest SV-2100 offers you the following benefits:
- It is mounted on a granite base with a manual or power column.
- The large **19cm** [7,5“] colour TFT LCD gives you high visibility and touch-screen functionality.
- It has a user friendly display unit for high precision surface roughness measurement.
- It performs roughness analyses conform to various international standards (EN ISO, VDA, ANSI, JIS) and customized settings.
- Designed for usage in workshop areas.

SV-2100S4

SV-2100M4

Specifications

Drive unit	
Traverse	100 mm
Measuring speed	0,02 - 5 mm/s
Drive speed	X = 0-40 mm/s Z2 = 0-20 mm/s or joystick operation
Traverse straightness	0,15 µm / 100 mm
Detector	
Measuring method	Skidless - Differential inductance
Range	800 µm; 80 µm; 8 µm (up to 2,4 mm with an optional stylus)
Display unit	
Profiles	Primary Profile (P), Roughness Profile (R), Waviness (W), MOTIF (P, R, W) and more
Standard	EN ISO, VDA, JIS, ANSI and customize settings
Analysis graphs	BAC, ADC
Digital filter	Gauss, 2CR75, PC75, RobustSpline
Cut-off length	λc : 0,025 mm; 0,08 mm; 0,25 mm; 0,8 mm; 2,5 mm; 8 mm; 25 mm; 80 mm λs : 0,25 µm; 0,8 µm; 2,5 µm; 8 µm; 25 µm; 80 µm; 250 µm; none λf : 0,08 mm; 0,25 mm; 0,8 mm; 2,5 mm; 8 mm; 25 mm; 80 mm; none
Printer	Thermal printer

Optional accessories

No.	Description
12AAG202	Extension rod, 50mm
12AAG203	Extension rod, 100mm
218-001	Cross-travel table
218-003	Rotary Vice

Preview

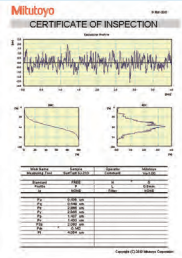

Software
USB COMMUNICATION TOOL
as a free download on www.mitutoyo.eu
registration required
(refer to page
Optional Software USB Communication Tool)

Refer to SURFACE MEASUREMENT brochure

SV-2100H4 model
Vertical travel : 550 mm power column
Granite base size (WxD) : 600 x 450 mm

No.	Detector measuring force [mN]	Stylus Tip angle	Stylus Tip radius [µm]
178-682-01D	0,75	60°	2
178-682-02D	4	90°	5

SV-2100M4 model
Vertical travel : 350 mm manual column
Granite base size (WxD) : 600 x 450 mm

No.	Detector measuring force [mN]	Stylus Tip angle	Stylus Tip radius [µm]
178-636-01D	0,75	60°	2
178-636-02D	4	90°	5

SV-2100S4 model
Vertical travel : 350 mm power column
Granite base size (WxD) : 600 x 450 mm

No.	Detector measuring force [mN]	Stylus Tip angle	Stylus Tip radius [µm]
178-680-01D	0,75	60°	2
178-680-02D	4	90°	5

SV-2100W4 model
Vertical travel : 550 mm power column
Granite base size (WxD) : 1000 x 450 mm

No.	Detector measuring force [mN]	Stylus Tip angle	Stylus Tip radius [µm]
178-684-01D	0,75	60°	2
178-684-02D	4	90°	5

All products to be sold to commercial customers. Product illustrations are without obligation. Product descriptions, in particular any and all technical specifications, are only binding when explicitly agreed upon. For suggested retail prices, please refer to the separate price list.

Surftest SJ-500P - SV-2100P

Series 178 - Surface Roughness Measuring Instruments with Software FORMTRACEPAK

These are surface roughness measuring instruments with software FORMTRACEPAK.
Software FORMTRACEPAK offers you the following benefits:

- It performs roughness analyses conform to various international standards (EN ISO, VDA, ANSI, JIS) and customized settings.
- It can be used for contour calculation within the measuring range.
- It offers total support for measurement system control, analysis and inspection report.
- All advantages of the SJ-500 and SV-2100 also apply to the P Type.

Surftest SJ-500P

No.	Detector measuring force [mN]	Stylus Tip angle	Stylus Tip radius [µm]
178-530-01D	0,75	60°	2
178-530-02D	4	90°	5

Surftest SV-2100M4P

No.	Detector measuring force [mN]	Stylus Tip angle	Stylus Tip radius [µm]
178-634-01D	0,75	60°	2
178-634-02D	4	90°	5

Specifications

Drive unit	
Traverse	50 mm
Measuring speed	0,02 - 5 mm/s
Drive speed	0-20 mm/s
Traverse straightness	0,2 µm / 50 mm
Detector	
Measuring method	Skidless - Differential inductance
Range	800 µm; 80 µm; 8 µm (up to 2,4 mm with an optional stylus)
Positioning	±1,5° (tilting) 30 mm (up/down)
Software	**FORMTRACEPAK**

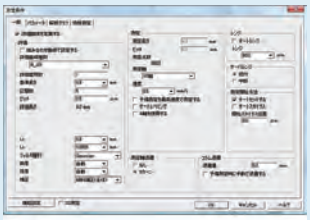

Measurement conditions

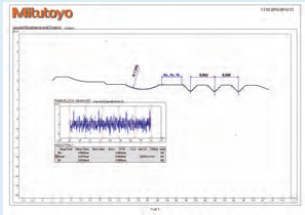

Formtracepak layout

Specifications

Drive unit	
Traverse	100 mm
Measuring speed	0,02 - 5 mm/s
Drive speed	X = 0-40 mm/s Z2 = 0-20 mm/s
Traverse straightness	0,15 µm / 100 mm
Detector	
Measuring method	Skidless - Differential inductance
Range	800 µm; 80 µm; 8 µm (up to 2,4 mm with an optional stylus)
Software	**FORMTRACEPAK**

Refer to SURFACE MEASUREMENT brochure

All products to be sold to commercial customers. Product illustrations are without obligation. Product descriptions, in particular any and all technical specifications, are only binding when explicitly agreed upon. For suggested retail prices, please refer to the separate price list.

Surftest SV-3200

Series 178 - Surface Roughness Measuring Instrument

This is a stationary surface roughness measuring instrument with FORMTRACEPAK software that allows you to take highly accurate measurements.
The Surftest SV-3200 offers you the following benefits:

- It performs roughness analyses conform to various international standards (EN ISO, VDA, ANSI, JIS) and customized settings.
- It also supports contour calculation features within the measuring range of the styli software.
- Part programing as well as motorised axes give you many features of a CNC instrument.
- You can choose from a huge number of styli that are easy to replace.
- Detector holders for downward/upward measurement and crank position available as optional
- Optional accessories like DAT unit and 3D/Y-axis table have been added to product line.

Specifications

Traverse	100 mm / 200 mm
Range	800 µm; 80 µm; 8 µm (up to 2,4 mm with an optional stylus)
Drive speed	X = 0 - 80 mm/s Z2 = 0 - 30 mm/s
Standard	EN ISO, VDA, JIS, ANSI and customize setting
Measuring speed	0,02 - 20 mm/s
Inclining range	±45°
Profiles	Primary Profile (P), Roughness Profile (R), Waviness (W), MOTIF (P, R, W) and more
Software	**FORMTRACEPAK** – Enables control of all axes and rotary table for realizing efficient measurement automation. – Perform contour evaluation that allows free analysis of level differences, angles, pitch, area and other characteristics as well as surface roughness evaluation. – Able to create an original inspection certificate by setting the print format to suit particular requirements.

Detector holder S-3000C

Detector holder S-3000CR

Detector holder S-3000MR

SV-3200H4 with optional DAT unit

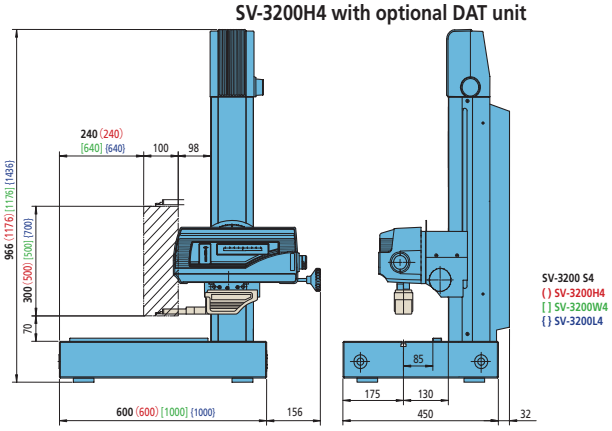

SV-3200S4 - SV-3200H4 - SV-3200W4 - SV-3200L4

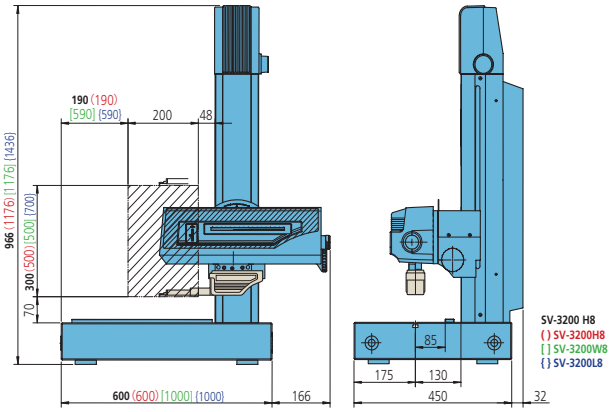

SV-3200S8 - SV-3200H8 - SV-3200W8 - SV-3200L8

All products to be sold to commercial customers. Product illustrations are without obligation. Product descriptions, in particular any and all technical specifications, are only binding when explicitly agreed upon. For suggested retail prices, please refer to the separate price list.

Surftest SV-3200

X-axis measuring range : 100 mm
X-axis Traverse straightness : (0,05+0,001L) µm, L = Measurement length (mm)

Model	SV-3200S4	SV-3200S4.	SV-3200H4	SV-3200H4.
No.	**178-434-11D**	**178-434-12D**	**178-435-11D**	**178-435-12D**
Detector measuring force [mN]	0,75	4	0,75	4
Stylus Tip angle	60°	90°	60°	90°
Stylus Tip radius [µm]	2	5	2	5
Vertical travel [mm]	300	300	500	500
Granite base size (WxD) [mm]	600 x 450	600 x 450	600 x 450	600 x 450

Model	SV-3200W4.	SV-3200W4	SV-3200L4	SV-3200L4.
No.	**178-436-11D**	**178-436-12D**	**178-474-11D**	**178-474-12D**
Detector measuring force [mN]	0,75	4	0,75	4
Stylus Tip angle	60°	90°	60°	90°
Stylus Tip radius [µm]	2	5	2	5
Vertical travel [mm]	500	500	700	700
Granite base size (WxD) [mm]	1000 x 450	1000 x 450	1000 x 450	1000 x 450

X-axis measuring range : 200 mm
X-axis Traverse straightness : (0,1+0,002L) µm, L=Measurement length (mm)

Model	SV-3200S8	SV-3200S8.	SV-3200H8	SV-3200H8.
No.	**178-437-11D**	**178-437-12D**	**178-438-11D**	**178-438-12D**
Detector measuring force [mN]	0,75	4	0,75	4
Stylus Tip angle	60°	90°	60°	90°
Stylus Tip radius [µm]	2	5	2	5
Vertical travel [mm]	300	300	500	500
Granite base size (WxD) [mm]	600 x 450	600 x 450	600 x 450	600 x 450

Model	SV-3200W8	SV-3200W8.	SV-3200L8	SV-3200L8.
No.	**178-439-11D**	**178-439-12D**	**178-475-11D**	**178-475-12D**
Detector measuring force [mN]	0,75	4	0,75	4
Stylus Tip angle	60°	90°	60°	90°
Stylus Tip radius [µm]	2	5	2	5
Vertical travel [mm]	500	500	700	700
Granite base size (WxD) [mm]	1000 x 450	1000 x 450	1000 x 450	1000 x 450

SV-3200 with 178-096 and 178-077

Optional accessories

No.	Description
178-097	Y-axis table
12AAD975	Rotary table, Theta-1
178-078	Rotary table, Theta2 axis
178-023	Manual vibration isolator
178-024	Stand for vibration isolator
178-025	Dynamic vibration isolator
218-001	Cross-travel table
218-003	Rotary Vice
12AAG202	Extension rod, 50mm
12AAG203	Extension rod, 100mm
178-611	Step gauge, mm, (2, 10)µm
178-087	Automatic leveling table, SV-series, CV-series, CS-3200
178-396-2	Detector, 0,75mN
178-397-2	Detector, 4mN
178-074	Detector holder S-3000C
178-075	Detector holder S-3000CR
178-076	Detector holder S-3000MR
178-040	D.A.T unit
178-096	3 D/Y-axis table
12AAR859	Detector stand
178-077	3D leveling table, (for SV-3200 only with 178-096)

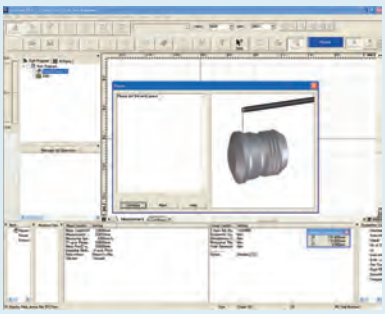

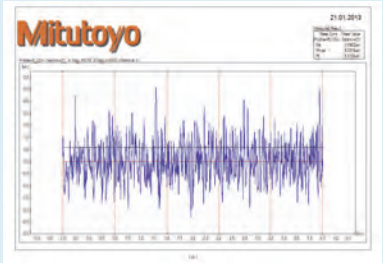

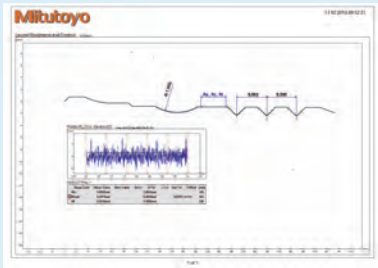

FORMTRACEPAK

All products to be sold to commercial customers. Product illustrations are without obligation. Product descriptions, in particular any and all technical specifications, are only binding when explicitly agreed upon. For suggested retail prices, please refer to the separate price list.

Surftest Extreme SV-3000CNC

Series 178 – CNC Surface Roughness Measuring Instrument

These is a fully CNC surface roughness measuring instrument with powerful software FORMTRACEPAK.
The Surftest Extreme SV-3000CNC offers you the following benefits:

- It is perfectly made for increased throughput of multiple profile and workpiece measurement tasks.
- Each axis has a drive speed of up to 200 mm/s.
- You can take continuous measurement over horizontal and inclined surfaces by power-tilting the drive unit.
- Within the measuring range of the styli software FORMTRACEPAK supports contour calculation features
- 3D topography measurement as option available
- Inclined plane measurement is possible through 2-axis simultaneous control in the X and Y directions.
- The detector unit incorporates an anti-collision safety device, causing it to automatically stop if its main body collides with a workpiece or jig.

SV-3000CNC

Model	SV-3000CNC-S	SV-3000CNC-H	SV-3000CNC-S.	SV-3000CNC-H.
No.	**178-522-2**	**178-542-2**	**178-524-2**	**178-544-2**
Z2-axis range [mm]	300	500	300	500
Y-axis table unit	-	-	Installed	Installed
α-axis unit	Installed	Installed	Installed	Installed

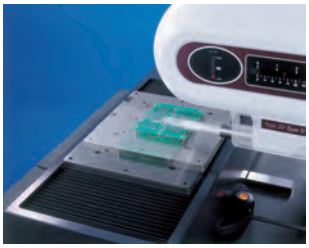

Automatic measurement

Specifications

Range	800 µm; 80 µm; 8 µm (up to 2,4 mm with an optional stylus)
Traverse	X = 200 mm Y = 200mm
Measuring speed	0,02 - 2 mm/s
Standard	EN ISO, VDA, JIS, ANSI and customize setting
Drive speed	CNC mode: max. 200 mm/s Joystick mode: 0 - 60 mm/s
Traverse straightness	0,5 µm / 200 mm
Inclining range	-45° (CCW) to +10° (CW)
Profiles	Primary Profile (P), Roughness Profile (R), Waviness (W), MOTIF (P, R, W) and more
Software	**FORMTRACEPAK** – Allows control of all axis, optional motor-driven Y-axis table and rotary table for efficient automated measurement. – Surface roughness analysis and contour evaluation can be performed using analysis of level differences, angle, pitch, area and contour tolerancing as standard. – An inspection certificate can be created by setting the print format as required.

Additional Specifications

Optional accessories	Other optional and standard accessories are listed later in different sections for accessories and styli.

Optional accessories

No.	Description
12AAD975	Rotary table, Theta-1
178-078	Rotary table, Theta2 axis
178-037	2D auto-leveling table
178-077	3D leveling table, (for SV-3200 only with 178-096)
12AAE032	Special anti-vibration table
12AAE449	Cabin for H-type used with CNC series, for Z2=500mm

Refer to SURFACE MEASUREMENT brochure

All products to be sold to commercial customers. Product illustrations are without obligation. Product descriptions, in particular any and all technical specifications, are only binding when explicitly agreed upon. For suggested retail prices, please refer to the separate price list.

Surftest Extreme SV-M3000CNC

Series 178 - CNC Surface Roughness Measuring Instrument

This is a top performance CNC surface roughness measuring instrument with powerful software FORMTRACEPAK.
The Surftest Extreme SV-M3000CNC offers you the following benefits:

- You can measure large and heavy workpieces such as engine blocks and crankshafts.
- It has an 800mm moving column configuration to largely eliminate workpiece size restrictions.
- Each axis has a drive speed of up to 200 mm/s.
- When combined with the optional detector swivelling unit, continuous measurement over the bottom, top and side surface of a workpiece is possible.
- The huge load table has a self-contained structure ensuring that you can easily accommodate various size workpieces, standard and custom jigs, and auto-feed devices.

No.	Model	Detector hold type (Essential option)
178-549-2	178-071	Standard
	178-072	Long type
	178-073	Rotary type

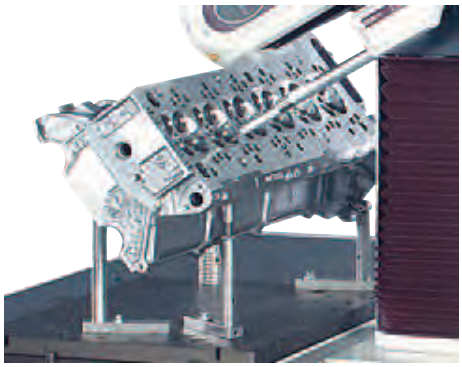

Typical measurement task

Specifications

Range	800 µm; 80 µm; 8 µm (up to 2,4 mm with an optional stylus)
Traverse	X = 200 mm Y = 800 mm Z2 = 500 mm
Measuring speed	0,02 - 2 mm/s
Standard	EN ISO, VDA, JIS, ANSI and customize setting
Drive speed	CNC mode: max. 200 mm/s Joystick mode: 0 - 50 mm/s
Traverse straightness	X = 0,5 µm / 200 mm (standard) X = 0,7 µm / 200 mm (long-type detector) X = 0,5 µm / 200 mm (rotary-type detector) Y = 0,5 µm / 50 mm; 2 µm / 800 mm (standard) Y = 0,7 µm / 50 mm; 3 µm / 800 mm (long-type detector) Y = 0,7 µm / 50 mm; 3 µm / 800 mm (rotary-type detector)
Inclining range	-45° (CCW) to +10° (CW)
Profiles	Primary Profile (P), Roughness Profile (R), Waviness (W), MOTIF (P, R, W) and more
Loading weight	300 kg
Software	**FORMTRACEPAK** • Enables control of all axes for realizing efficient measurement automation. • Perform contour evaluation that allows free analysis of level differences, angles, pitch, area and other characteristics as well as surface roughness evaluation. • Able to create an original inspection certificate by setting the print format to suit particular requirements.

Additional Specifications

Optional accessories	Other optional and standard accessories are listed later in different sections for accessories and styli.

Refer to SURFACE MEASUREMENT brochure

All products to be sold to commercial customers. Product illustrations are without obligation. Product descriptions, in particular any and all technical specifications, are only binding when explicitly agreed upon. For suggested retail prices, please refer to the separate price list.

Contracer CV-2100

Series 218 - Contour Measuring Instruments

This contour measuring instrument is designed to support "easy to use" and "speedy" measurements.

The Contracer CV-2100N4 and CV-2100M4 offer you the following benefits:
- Extensive contour measurement quick and easy.
- Quick movement in Z2 because of an easy to use quick grip. [M4 type]
- Auto execution and multi point measurement with the new stylus up-and down function.
- X-axis drive up to 20mm/s by jog shuttle.
- Easy part programming as well as single measurement with software FORMTRACEPAK.
- Automatic evaluation, best fit of contours, CAD comparison and many more features as standard.
- CV-2100 M4 mounted with quick grip stand on a granite base.
- CV-2100 N4 can be mounted on an optional granite base with a manual column.
- Centralized front control panel

Specifications

Measuring range	Z1 = 50mm X = 100mm
Measuring speed	0,02 - 5 mm/s
Drive speed	X = 0 - 20 mm/s
Accuracy	X = (2,5 + 0,02L) µm [L: drive length (mm)] Z1 = (2,5 + I0,1HI) µm [H: Measurement height from the horizontal position (mm)]
Traverse straightness	2,5 µm / 100 mm
Column type	M4: 350 mm
Software	**FORMTRACEPAK** – Allows control of measuring conditions for efficient automated measurement. – Contour evaluation can be performed using analysis of level differences, angle, pitch, area and contour tolerancing as standard. – An inspection certificate can be created by setting the print format as required.

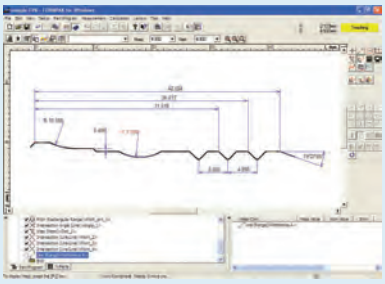

FORMTRACEPAK

Refer to CV-2100 brochure

Scan QR Code with your mobile device and watch our product videos on YouTube

CV-2100M4

CV-2100N4

All products to be sold to commercial customers. Product illustrations are without obligation. Product descriptions, in particular any and all technical specifications, are only binding when explicitly agreed upon. For suggested retail prices, please refer to the separate price list.

Contracer CV-2100

Series 218 - Contour Measuring Instruments

Specifications and accessories

Model	CV-2100N4	CV-2100M4
No.	**218-613D**	**218-633D**
Z2-axis range [mm]	-	350
Z1-axis range [mm]	50	50
Z2-axis column type	Optional: Manual	Manual: Quick up-and-down motion, fine feed
X1-axis range [mm]	100	100

CV-2100 Stylus up-and-down function

CV-2100M4 with column and quick grip

Easy and quick movement in Z2

Additional Specifications

Optional accessories	Other optional and standard accessories are listed later in different sections for accessories and styli.

Optional accessories

No.	Description
218-001	Cross-travel table
218-003	Rotary Vice
178-023	Manual vibration isolator
178-024	Stand for vibration isolator
218-042	Column Stand, for CV-2100N4

Optional column stand 218-042

All products to be sold to commercial customers. Product illustrations are without obligation. Product descriptions, in particular any and all technical specifications, are only binding when explicitly agreed upon. For suggested retail prices, please refer to the separate price list.

Contracer CV-3200 and CV-4500

Series 218 - Contour Measuring Instruments

These are high accuracy semi-automatic contour measuring instruments equipped with powerful software FORMTRACEPAK.

The Contracer CV-3200 offers you the following benefits:

- Huge measuring range of Z=60 mm comes as standard.
- Easy exchange of magnetic stylus arm gives you excellent flexibility.
- The CV-3200 provides excellent accuracy and resolution in Z1-axis measurement.
- Its high positioning speed reduces the total measurement time.
- It has a fully automatic calibration routine.

The Contracer CV-4500 offers you the following benefits:

- It has a dual stylus system for upward/downward measurement at double sided contours.
- Variable measuring force is controlled by software FORMTRACEPAK.
- Easy exchange of magnetic stylus arm gives you excellent flexibility.
- The CV-4500 provides the highest accuracy and resolution possible.
- The motorised axes have a high positioning speed.
- The dual stylus system has a fully automatic calibration routine.

Specifications

Traverse	Z2 = 300 mm / 500 mm / 700 mm
Measuring range	Z1 = 60 mm X = 100 mm / 200 mm
Measuring speed	0,02 - 20 mm/s
Drive speed	X = 0 - 80 mm/s Z2 = 0 - 30 mm/s
Accuracy	X = (0,8+0,01L) µm (S4, H4, W4, L4 model) X = (0,8+0,02L) µm (S8, H8, W8, L8 model) [L : Drive length (mm)] **CV-3200 :** Z1 = (1,4+I2HI/100) µm **CV-4500 :** Z1 = (0,8+I2HI/100) µm [H : Measurement height from the horizontal position (mm)]
Inclining range	±45°
Measuring force	**CV-3200 :** 30 mN **CV-4500 :** 10, 20, 30, 40, 50 mN (software controlled)
Software	**FORMTRACEPAK**

Additional Specifications

Optional accessories	Other optional and standard accessories are listed later in different sections for accessories and styli.

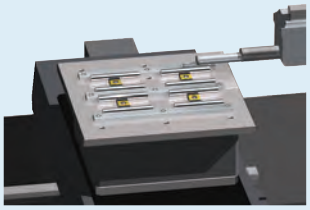

Optional Y-axis - 178-097

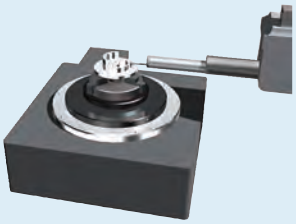

Optional Rotary Table θ1 - 12AAD975

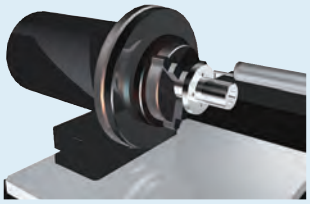

Optional Rotary Table θ2 - 178-078

Refer to CONTOUR MEASUREMENT brochure

Contracer CV-3200
(CV-4500 equipped with dual stylus system)

Drive unit CV-3200

Drive unit CV-4500

All products to be sold to commercial customers. Product illustrations are without obligation. Product descriptions, in particular any and all technical specifications, are only binding when explicitly agreed upon. For suggested retail prices, please refer to the separate price list.

Contracer CV-3200 and CV-4500

Series 218 - Contour Measuring Instruments

Dimensions and specifications

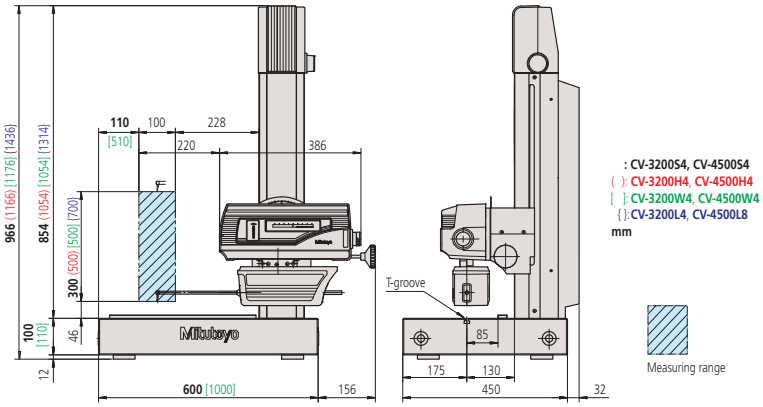

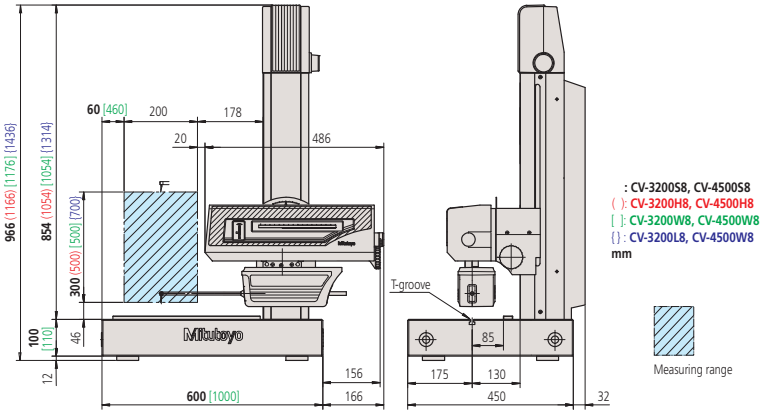

CV-3200

Model	CV-3200S4	CV-3200H4	CV-3200W4	CV-3200L4
No.	**218-481-10D**	**218-482-10D**	**218-483-10D**	**218-484-10D**
X1-axis range [mm]	100	100	100	100
Vertical travel [mm]	300	500	500	700
Granite base size (WxD) [mm]	600x450	600x450	1000x450	1000x450

Model	CV-3200S8	CV-3200H8	CV-3200W8	CV-3200L8
No.	**218-486-10D**	**218-487-10D**	**218-488-10D**	**218-489-10D**
X1-axis range [mm]	200	200	200	200
Vertical travel [mm]	300	500	500	700
Granite base size (WxD) [mm]	600x450	600x450	1000x450	1000x450

CV-4500

Model	CV-4500S4	CV-4500H4	CV-4500W4	CV-4500L4
No.	**218-441-10D**	**218-442-10D**	**218-443-10D**	**218-444-10D**
X1-axis range [mm]	100	100	100	100
Vertical travel [mm]	300	500	500	700
Granite base size (WxD) [mm]	600x450	600x450	1000x450	1000x450

Model	CV-4500S8	CV-4500H8	CV-4500W8	CV-4500L8
No.	**218-446-10D**	**218-447-10D**	**218-448-10D**	**218-449-10D**
X1-axis range [mm]	200	200	200	200
Vertical travel [mm]	300	500	500	700
Granite base size (WxD) [mm]	600x450	600x450	1000x450	1000x450

Specifications

Software	**FORMTRACEPAK** – Allows control of all axis, optional motor-driven Y-axis table and rotary table for efficient automated measurement. – Contour evaluation can be performed using analysis of level differences, angle, pitch, area and contour tolerancing as standard. – An inspection certificate can be created by setting the print format as required.

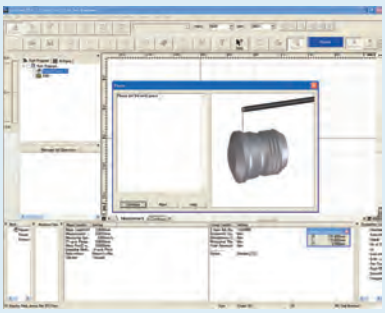

Measurement control screen

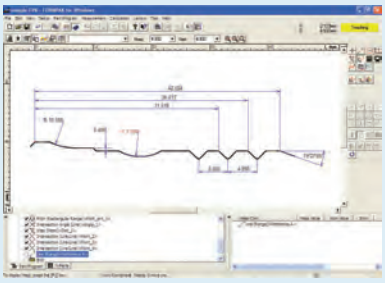

Contour analysis screen

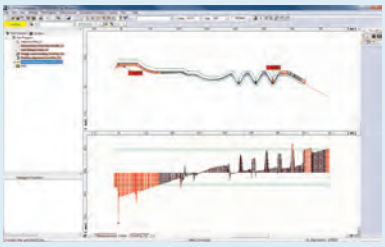

Contour comparison

FORMTRACEPAK

All products to be sold to commercial customers. Product illustrations are without obligation. Product descriptions, in particular any and all technical specifications, are only binding when explicitly agreed upon. For suggested retail prices, please refer to the separate price list.

Formtracer SV-C3200 and SV-C4500

Series 525 - Surface and Contour Measuring System

These are high accuracy semi-automatic contour and roughness measuring instruments equipped with powerful software FORMTRACEPAK.

The Formtracer SV-C3200 offers you the following benefits:

- It is as powerful as two separate, specialised instruments.
- It economically combines roughness & contour measurement into a single device.
- You have access to a huge contour measuring range of Z=60mm as standard, and a roughness measurement range of 800µm as standard.
- Easy exchange of the magnetic contour stylus arm gives you excellent flexibility.
- The SV-C3200 provides you with excellent accuracy and resolution in Z1-axis measurement.

The Formtracer SV-C4500 offers you the following benefits:

- It economically combines roughness & dual stylus upward/downward contour measurement into a single device.
- You have access to a huge contour measuring range of Z=60mm as standard, and a roughness measurement range of 800µm as standard.
- Its variable measuring force is controlled by software FORMTRACEPAK.
- Easy exchange of the magnetic contour stylus arm gives you excellent flexibility.
- The SV-C4500 provides you with high accuracy and resolution.

Specifications

Traverse	Z2 = 300 mm / 500 mm / 700 mm
Measuring range	X = 100 mm / 200 mm **Contour:** Z1 = 60 mm **Roughness:** Z1 = 800 µm; 80 µm; 8 µm (up to 2,4 mm with an optional stylus)
Measuring speed	0,02 - 20 mm/s
Drive speed	X = 0 - 80 mm/s Z2 = 0 - 30 mm/s
Accuracy	X = (0,8+0,01L) µm (S4, H4, W4, L4 model) X = (0,8+0,02L) µm (S8, H8, W8, L8 model) [L : Drive length (mm)] **SV-C3200 :** Z1 = (1,4+I2HI/100) µm **SV-C4500 :** Z1 = (0,8+I2HI/100) µm [H : Measurement height from the horizontal position (mm)]
Inclining range	±45°
Measuring force	**SV-C3200 Contour :** 30 mN **SV-C4500 Contour :** 10, 20, 30, 40, 50 mN software controlled **Roughness :** 0,75 mN / 4mN (dependent on model)
Software	**FORMTRACEPAK**

Additional Specifications

Optional accessories	Other optional and standard accessories are listed later in different sections for accessories and styli.

Refer to Formtracer SV-C3200 / 4500 brochure

Scan QR Code with your mobile device and watch our product videos on YouTube

Formtracer SV-C3200

Surface Roughness drive unit

[Surface Roughness Measurement : Complies with EN ISO, VDA, JIS, ANSI and other international surface roughness standards.]

Contour drive unit SV-C3200

Contour drive unit SV-C4500

All products to be sold to commercial customers. Product illustrations are without obligation. Product descriptions, in particular any and all technical specifications, are only binding when explicitly agreed upon. For suggested retail prices, please refer to the separate price list.

Formtracer SV-C3200 and SV-C4500

Series 525 - Surface and Contour Measuring System

Metric

SV-C3200

No.	Model	Detector 0,75 mN	Detector 4 mN	X-axis 100 mm	X-axis 200 mm	Z2-axis 300 mm	Z2-axis 500 mm	Z2-axis 700 mm	Granite size (WxD) [mm]
525-481-11D	SV-C3200S4	●		●		●			600 x 450
525-481-12D	"		●	●		●			600 x 450
525-482-11D	SV-C3200H4	●		●			●		600 x 450
525-482-12D	"		●	●			●		600 x 450
525-483-11D	SV-C3200W4	●		●			●		1000 x 450
525-483-12D	"		●	●			●		1000 x 450
525-484-11D	SV-C3200L4	●		●				●	1000 x 450
525-484-12D	"		●	●				●	1000 x 450
525-486-11D	SV-C3200S8	●			●	●			600 x 450
525-486-12D	"		●		●	●			600 x 450
525-487-11D	SV-C3200H8	●			●		●		600 x 450
525-487-12D	"		●		●		●		600 x 450
525-488-11D	SV-C3200W8	●			●		●		1000 x 450
525-488-12D	"		●		●		●		1000 x 450
525-489-11D	SV-C3200L8	●			●			●	1000 x 450
525-489-12D	"		●		●			●	1000 x 450

Metric

SV-C4500

No.	Model	Detector 0,75 mN	Detector 4 mN	X-axis 100 mm	X-axis 200 mm	Z2-axis 300 mm	Z2-axis 500 mm	Z2-axis 700 mm	Granite size (WxD) [mm]
525-441-11D	SV-C4500S4	●		●		●			600 x 450
525-441-12D	"		●	●		●			600 x 450
525-442-11D	SV-C4500H4	●		●			●		600 x 450
525-442-12D	"		●	●			●		600 x 450
525-443-11D	SV-C4500W4	●		●			●		1000 x 450
525-443-12D	"		●	●			●		1000 x 450
525-444-11D	SV-C4500L4	●		●				●	1000 x 450
525-444-12D	"		●	●				●	1000 x 450
525-446-11D	SV-C4500S8	●			●	●			600 x 450
525-446-12D	"		●		●	●			600 x 450
525-447-11D	SV-C4500H8	●			●		●		600 x 450
525-447-12D	"		●		●		●		600 x 450
525-448-11D	SV-C4500W8	●			●		●		1000 x 450
525-448-12D	"		●		●		●		1000 x 450
525-449-11D	SV-C4500L8	●			●			●	1000 x 450
525-449-12D	"		●		●			●	1000 x 450

Using Y-axis table

Using rotary table θ1

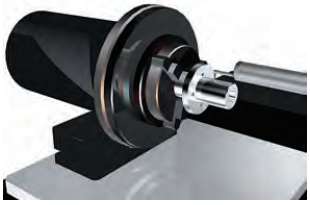

Using rotary Table θ2

Specifications

Software	**FORMTRACEPAK** – Allows control of all axis, optional motor-driven Y-axis table and rotary table for efficient automated measurement. – Contour evaluation can be performed using analysis of level differences, angle, pitch, area and contour tolerancing as standard. – An inspection certificate can be created by setting the print format as required.

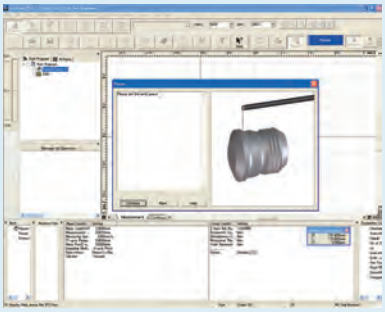

Measurement control screen

Contour analysis screen

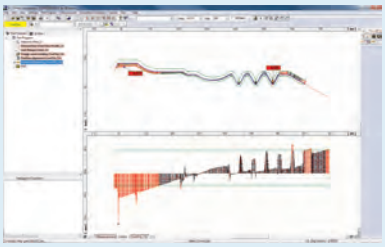

Contour comparison

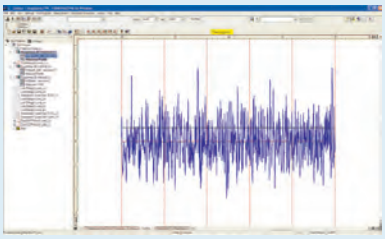

Roughness analysis

All products to be sold to commercial customers. Product illustrations are without obligation. Product descriptions, in particular any and all technical specifications, are only binding when explicitly agreed upon. For suggested retail prices, please refer to the separate price list.

Formtracer CS-3200

Series 525 - Surface and Contour Measuring System

This provides all-in-one surface roughness and contour measurement within one drive unit.
The Formtracer CS-3200 offers you the following benefits:
- You can carry out simultaneous analysis of roughness and contour with one measurement.
- It performs roughness analyses conform to various international standards (EN ISO, VDA, ANSI, JIS) and customized settings..
- It gives you the best measuring condition with a vibration stand as standard.
- The high drive speed reduces the total measurement time.
- The detector unit can be extended to avoid interference between the drive unit and workpiece.

Specifications

Traverse	Z2 = 300 mm
Measuring range	X = 100 mm Z1 = 5 mm (up to 10 mm with an optional stylus)
Measuring speed	Roughness measurement: 0,02 / 0,05 / 0,1 / 0,2 mm/s Contour measurement: 0,02 / 0,05 / 0,1 / 0,2 / 0,5 / 1 / 2 mm/s
Drive speed	X = 0 - 80 mm/s Z2 = 0 - 20 mm/s
Accuracy	X = (0,8+0,01L) µm [L : Drive length (mm)] Z1 = (1,5+l2Hl/100) µm H : Measurement height from the horizontal position (mm)
Inclining range	±45°
Traverse straightness	X = 0,2 µm / 100 mm
Software	**FORMTRACEPAK** – Allows control of all axis, optional motor-driven Y-axis table and rotary table for efficient automated measurement. – Surface roughness analysis and contour evaluation can be performed using analysis of level differences, angle, pitch, area and contour tolerancing as standard. – An inspection certificate can be created by setting the print format as required.

Refer to Formtracer CS-3200 brochure

Scan QR Code with your mobile device and watch our product videos on YouTube

CS-3200S4
(with optional Y-axis 178-097)

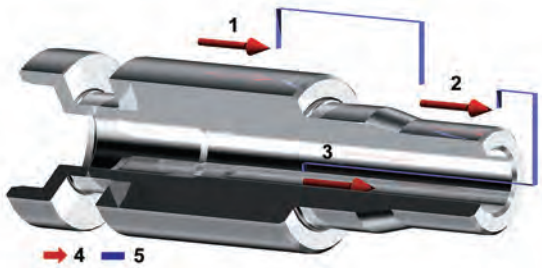

1: Outside diameter
2: Outside diameter
3: Inside diameter
4: Measurement element
5: Positioning element

Continuous measurement example:

The drive unit (X-axis) and column (Z2-axis) are equipped with high-accuracy linear scales (ABS type) enabling fully automatic measurement combining vertical and horizontal movement. This improves reproducibility of continuous automatic measurement of small holes in the vertical direction and repeated measurements of parts which are difficult to position

All products to be sold to commercial customers. Product illustrations are without obligation. Product descriptions, in particular any and all technical specifications, are only binding when explicitly agreed upon. For suggested retail prices, please refer to the separate price list.

Formtracer CS-3200

Series 525 - Surface and Contour Measuring System

Specifications and Styli

Model	CS-3200S4
No.	**525-401D**
Z2-axis range [mm]	300
X1-axis range [mm]	100

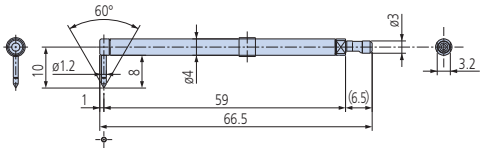

12AAD554
Standard stylus
Radius of tip curvature = 2 µm
Tip Material: Diamond

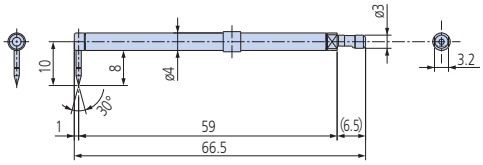

12AAD552
Cone stylus
Radius of tip curvature = 25 µm
Tip Material: Sapphire

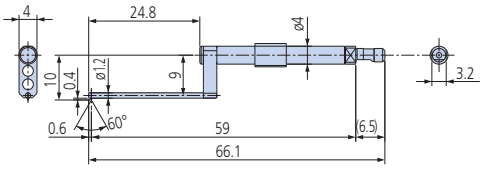

12AAD556
Small hole stylus
Radius of tip curvature = 2 µm
Tip Material: Diamond

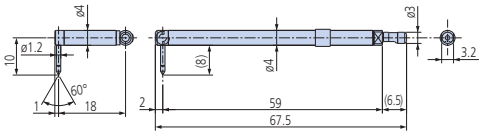

12AAD558
Eccentric type stylus
Radius of tip curvature = 2 µm
Tip Material: Diamond

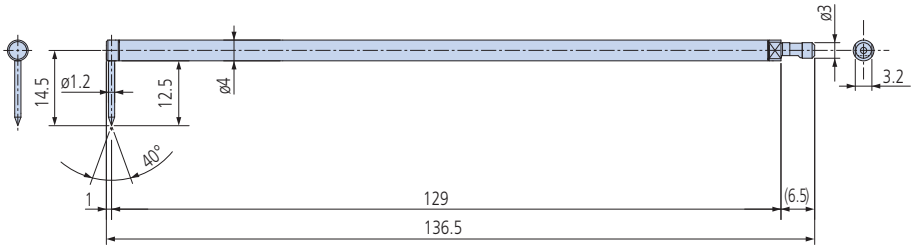

12AAD562
2x-long stylus*1
Radius of tip curvature = 5 µm
Tip Material: Diamond

***1: Measuring force is 4mN and the Z1 measuring and resolution is double that of the standard stylus.**

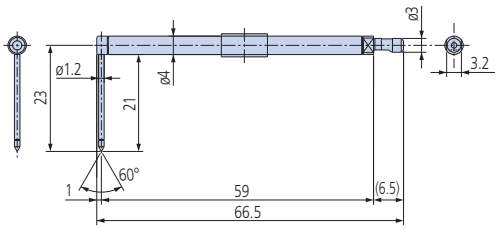

12AAD560
Deep groove stylus
Radius of tip curvature = 2 µm
Tip Material: Diamond

Additional Specifications

Optional accessories	Other optional and standard accessories are listed later in different sections for accessories and styli.

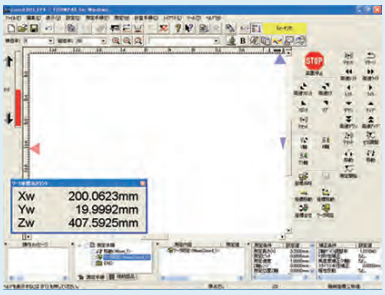

Measuring instrument control

Contour analysis screen

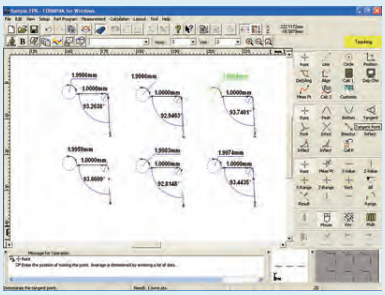

Contour analysis screen

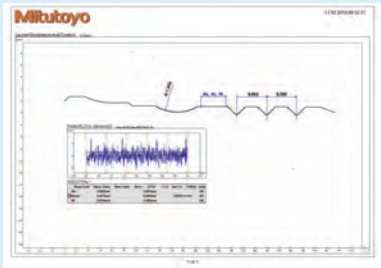

Contour and roughness layout

All products to be sold to commercial customers. Product illustrations are without obligation. Product descriptions, in particular any and all technical specifications, are only binding when explicitly agreed upon. For suggested retail prices, please refer to the separate price list.

Formtracer Extreme SV-C4500CNC

Series 525 - Surface and Contour Measuring Instrument

High accurate fully CNC surface and contour measuring instrument.
The Formtracer Extreme SV-C4500CNC offers you the following benefits:

- Powerful as two separate, fully CNC instruments.
- Measurement of long distances in Z2-axis for models without α- axis.
- Each axis has a drive speed up to 200mm/s.
- Dual stylus system for upward and downward contour measurement at doubled sided contours.
- It´s variable contour measuring force is controlled by software FORMTRACEPAK.
- The contour drive unit is equipped with an arc encoder detector giving excellent accuracy and resolution in Z1-axis.
- Perfectly made for increased throughput of multiple profile and workpiece measurement tasks.
- The detector unit incorporates an anti-collision safety device, causing it to stop automatically if its main body collides with a workpiece or jig.

Specifications

Traverse	Z2= 300 mm / 500 mm
Measuring range	X= 200 mm Y= 200 mm **Contour:** Z1= 60 mm Z2= 300 / 500 mm **Roughness:** Z1= 800 µm; 80 µm; 8 µm (up to 2,4 mm with an optional stylus)
Measuring speed	0,02 - 2 mm/s
Drive speed	CNC mode: max. 200 mm/s Joystick mode: 0-50 mm/s
Accuracy	X= (0,8 +4L/200) µm [L: Drive length (mm)] Z1= (0,8 + I2HI/100) µm [H: Measurement height from the horizontal position (mm)] Model without α-axis: Z2= (1,5 + 10HI1000) µm
Inclining range	-45° (CCW) to +10° (CW)
Measuring force	0,75 mN
Software	**FORMTRACEPAK** – Allows control of all axis, motor-driven Y-axis table and rotary table for efficient automated measurement. – Contour evaluation can be performed using analysis of level differences, angle, pitch, area and contour tolerancing as standard. – An inspection certificate can be created by setting the print format as required.

Refer to CONTOUR AND SURFACE MEASUREMENT brochure

SV-C4500CNC equipped with two powerful exchangeable drive units

Surface Roughness drive unit

Contour drive unit

All products to be sold to commercial customers. Product illustrations are without obligation. Product descriptions, in particular any and all technical specifications, are only binding when explicitly agreed upon. For suggested retail prices, please refer to the separate price list.

Formtracer Extreme SV-C4500CNC

Series 525 - Surface and Contour Measuring Instrument

SV-C4500CNC-H

No.	Z2-axis range [mm]	Y-axis table unit	α-axis unit
525-681-1D	500	-	-
525-682-1D	500	-	Installed
525-683-1D	500	Installed	-
525-684-1D	500	Installed	Installed

SV-C4500CNC-S

No.	Z2-axis range [mm]	Y-axis table unit	α-axis unit
525-661-1D	300	-	-
525-662-1D	300	-	Installed
525-663-1D	300	Installed	-
525-664-1D	500	Installed	Installed

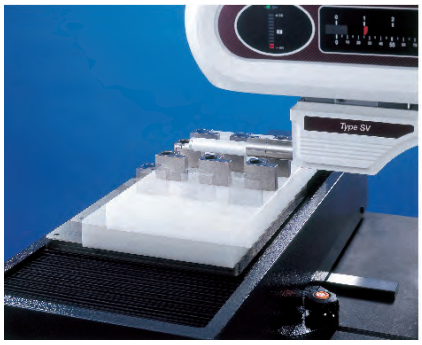

Multiple measurements

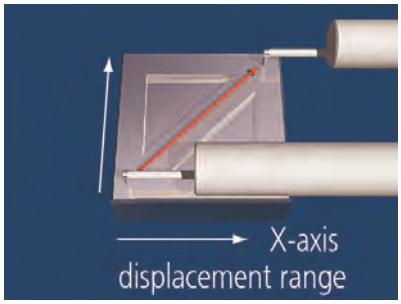

Through 2-axis simultaneous control in the X and Y directions

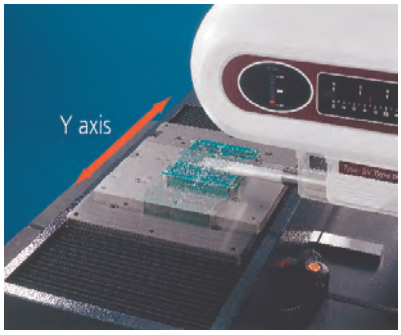

Y-axis

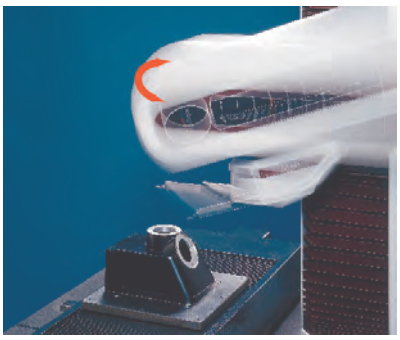

α-axis

Specifications

Optional accessories	Other optional and standard accessories are listed later in different sections for accessories and styli.

Optional accessories

No.	Description
178-397-2	Detector, 4mN
12AAD975	Rotary table, Theta-1
178-078	Rotary table, Theta2 axis
178-037	2D auto-leveling table
178-077	3D leveling table, (for SV-3200 only with 178-096)
12AAE449	Cabin for H-type used with CNC series, for Z2=500mm
12AAE287	Cabin for S-type used with CNC series, For Z2=300mm

All products to be sold to commercial customers. Product illustrations are without obligation. Product descriptions, in particular any and all technical specifications, are only binding when explicitly agreed upon. For suggested retail prices, please refer to the separate price list.

Formtracer Extreme SV-C4500CNC HYBRID Type 1

Specifications

Traverse	Z2 = 500 mm
Measuring range	X= 200 mm Y= 200 mm **Contour:** Z1= 60 mm Z2= 300 / 500 mm **Roughness:** Z1= 800 µm; 80 µm; 8 µm (up to 2,4 mm with an optional stylus)
Measuring speed	0,02 - 2 mm/s
Accuracy	X= (0,8 +4L/200) µm [L: Drive length (mm)] Z1= (0,8 + I2HI/100) µm [H: Measurement height from the horizontal position (mm)] Model without α-axis: Z2= (1,5 + 10HI1000) µm
Software	**FORMTRACEPAK** – Allows control of all axis, motor-driven Y-axis table and rotary table for efficient automated measurement. – Contour evaluation can be performed using analysis of level differences, angle, pitch, area and contour tolerancing as standard. – An inspection certificate can be created by setting the print format as required.

Series 525 - Surface and Contour Measuring Instrument

This measuring system is equipped with a surface roughness detector, a contour detector and a confocal chromatic point sensor (CPS) employing axial chromatic aberration. It performs non-contact contour and roughness measurement on parts with steeply inclined surfaces and soft materials.

- Powerful as three separate fully CNC instruments
- High accurate fully CNC surface and contour measuring instrument
- Non-contact and contact measurement combined in one instrument
- Two machine types with different CPS sensors available, depending on measuring range and resolution
- Drive speed of up to 200mm/s in all axes
- Vibration isolator as standard

Surface Roughness drive unit

Contour drive unit

CPS sensor drive unit

No.	Model	Roughness	Contour	Non-contact
525-686-1D	Type 1A	0,75 mN	Dual contour stylus	CPS2525
525-687-1D	Type 1B	0,75 mN	Dual contour stylus	CPS0517

All products to be sold to commercial customers. Product illustrations are without obligation. Product descriptions, in particular any and all technical specifications, are only binding when explicitly agreed upon. For suggested retail prices, please refer to the separate price list.

Formtracer Extreme CS-5000CNC and CS-H5000CNC

Series 525 - CNC Surface and Contour Measuring Instruments

This is the highest-accuracy stylus type CNC surface roughness and contour measuring instrument. The Formtracer Extreme CS-5000CNC / CS-H5000CNC offers you the following benefits:

- It meets the highest demands of accuracy and repeatability.
- You can carry out simultaneous analysis of roughness and contour within one measurement.
- It includes a cabin and a vibration stand as standard to avoid external influences.
- A Mitutoyo Laser Holoscale is incorporated in the X1- and Z1-axes so you can achieve high resolution of X1-axis : 6,25 nm and Z1-axis : 0,8 nm/1,6 nm.
- The X1 and Z2-axis have maximum drive speeds of 40mm/s and 200mm/s respectively.

CS-H5000CNC

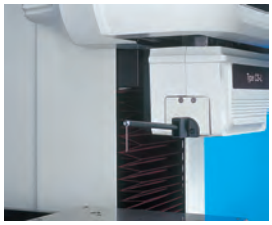

Specifications

Traverse	Z2 = 300 mm / 500 mm
Measuring range	X = 200mm Z1 = 12 mm [standard lenght stylus] Z1 = 24 mm [double lenght stylus]
Measuring speed	Roughness measurement: 0,02 - 0,2 mm/s Contour measurement: 0,02 - 2 mm/s
Drive speed	CNC mode: max. 200 mm/s Joystick mode 0 - 50 mm/s
Accuracy	**CS-5000CNC:** X = (0,3+0,002L) µm Z1 = (0,3+I0,02HI) µm **CS-H5000CNC:** X = (0,16+0,001L) µm Z1 = (0,07+I0,02HI) µm [L : Drive length (mm)] [H : Measurement height from the horizontal position (mm)]
Traverse straightness	**CS-5000CNC:** X = (0,1+0,0015L) µm [standard stylus] X = (0,2+0,0015L) µm [double length stylus] **CS-H5000CNC:** X = (0,05+0,0003L) µm [standard stylus] X = (0,1+0,0015L) µm [double length stylus]
Measuring force	4 mN (with standard stylus) 0,75 mN (with 2X-long stylus)
Resolution	X = 0,00625 µm Z1 = 0,0008 µm [standard stylus] Z1 = 0,0016 µm [double length stylus]
Software	**FORMTRACEPAK**

Refer to CONTOUR AND SURFACE MEASUREMENT brochure

All products to be sold to commercial customers. Product illustrations are without obligation. Product descriptions, in particular any and all technical specifications, are only binding when explicitly agreed upon. For suggested retail prices, please refer to the separate price list.

Formtracer Extreme CS-5000CNC and CS-H5000CNC

Series 525 - CNC Surface and Contour Measuring Instruments

Specifications

Software

FORMTRACEPAK
- Allows control of all axis, optional motor-driven Y-axis table and rotary table for efficient automated measurement.
- Contour evaluation can be performed using analysis of level differences, angle, pitch, area and contour tolerancing as standard.
- An inspection certificate can be created by setting the print format as required.

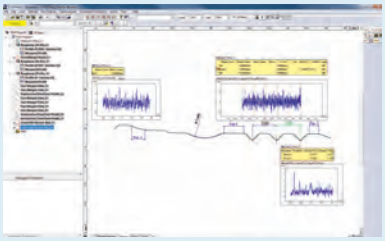

Contour and roughness analysis

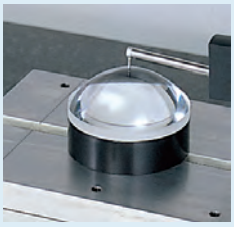

Optional:
Aspherical lens analysis program ASLPAK

Specifications and Styli

CS-5000CNCH

Model	CS5000CNCH	CS-5000CNCH + α-axis unit	CS-5000CNCH + Y-axis table unit	CS-5000CNCH + Y-axis table unit +α-axis unit
No.	**525-746D**	**525-747D**	**525-748D**	**525-749D**
Z2-axis range [mm]	500	500	500	500
Y-axis table unit	-	-	Installed	Installed
α-axis unit	-	Installed	-	Installed

CS-5000CNCS

Model	CS-5000CNCS	CS-5000CNCS + α-axis unit	CS-5000CNCS + Y-axis table unit	CS-5000CNCS + Y-axis table unit + α-axis unit
No.	**525-726D**	**525-727D**	**525-728D**	**525-729D**
Z2-axis range [mm]	300	300	300	300
Y-axis table unit	-	-	Installed	Installed
α-axis unit	-	Installed	-	Installed

CS-H5000CNCS

Model	CS-H5000CNCS	CS-H5000CNCS + Y-axis table unit
No.	**525-776D**	**525-777D**
Z2-axis range [mm]	300	300
Y-axis table unit	-	Installed
α-axis unit	-	-

Standard

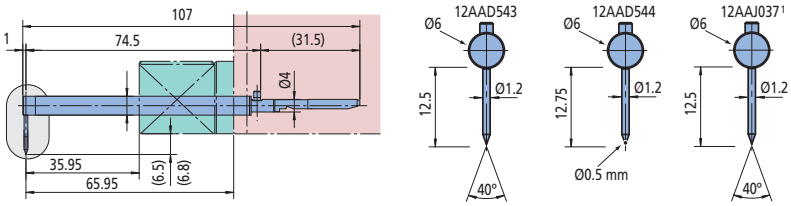

Double length

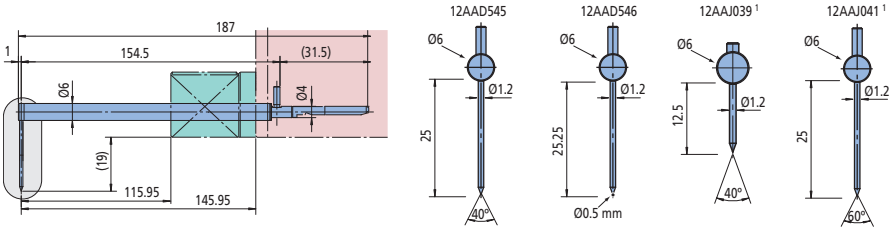

For small holes

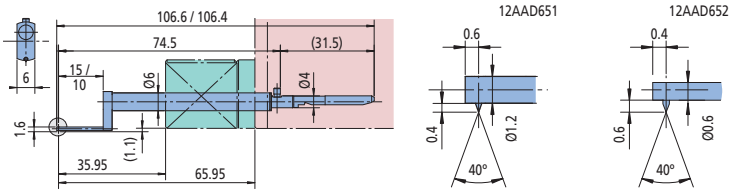

Eccentric

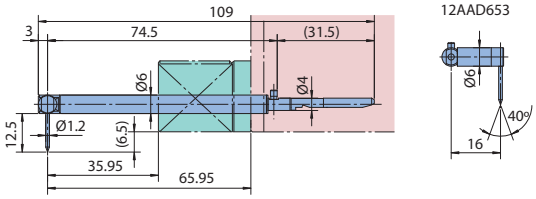

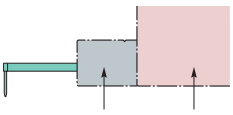

Nosepiece **Detector**

1 = additional for CS-H5000CNC

All products to be sold to commercial customers. Product illustrations are without obligation. Product descriptions, in particular any and all technical specifications, are only binding when explicitly agreed upon. For suggested retail prices, please refer to the separate price list.

Mitutoyo

Optional Software USB Communication Tool

Series 178 - Control Software for SJ series, SV-2100

This is a control software for Surftest SJ-210 / SJ-310 / SJ-410 / SJ-500 and SV-2100 which offers you the following benefits:

- It is available as a free download on www.mitutoyo.eu (registration is required).
- Output software is based on Microsoft® Excel® for controlling the devices, reproducing and storing measurement data.
- Measurement device control.
- It provides definition of measurement variables.
- Graphic representation of the profile.
- Storage of measurement records.
- Documentation of measurements result.
- A USB connecting cable is necessary.

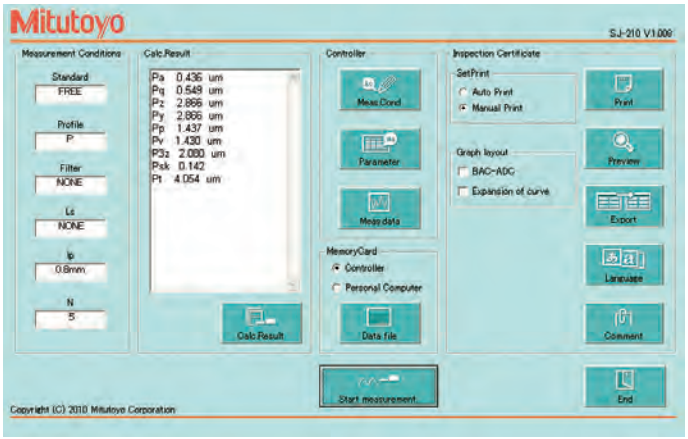

Input mask for Surftest SJ series

Output record from Microsoft® Excel® in 18 languages as standard.

Optional accessories

No.	Description
12AAL068D	USB cable for SJ-210
12AAD510	Signal cable (USB)
12AAH490	USB Cable for SJ-500 / SV-2100

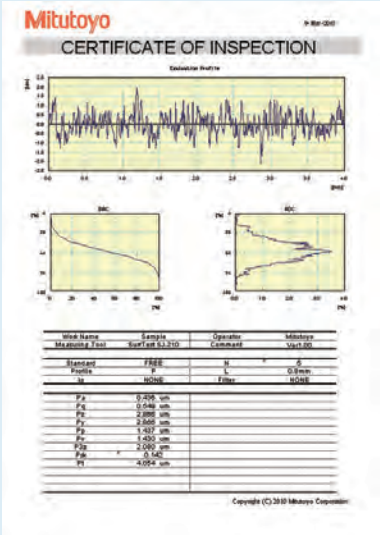

Output record from Microsoft® Excel®

All products to be sold to commercial customers. Product illustrations are without obligation. Product descriptions, in particular any and all technical specifications, are only binding when explicitly agreed upon. For suggested retail prices, please refer to the separate price list.

Optional Styli
for Surftest and Formtracer SV-C series

12AAG202 Extension rod 50mm

12AAG203 Extension rod 100mm

Detectors

mm

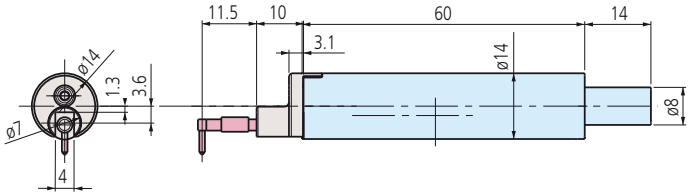

Order No	Measuring force		Inclusive stylus
178-396-2	0,75mN	R2µm, 60°	12AAC731
178-397-2	4mN	R5µm, 90°	12AAB403

No.	Radius	Angle [°]
12AAE882	1 µm	60°
12AAE924	1 µm	90°
12AAC731	2 µm	60°
12AAB403	5 µm	90°
12AAB415	10 µm	90°
12AAE883	250 µm	60°

mm

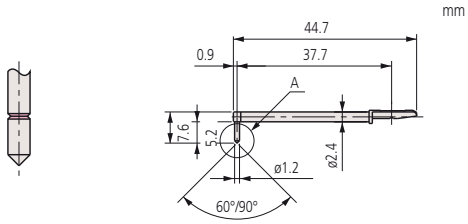

Standard

No.	Radius	Angle [°]
12AAC732	2 µm	60°
12AAB404	5 µm	90°
12AAB416	10 µm	90°

mm

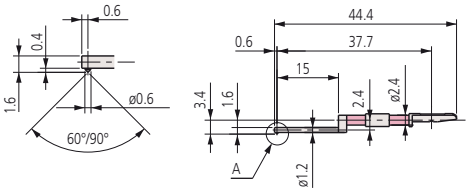

For small hole

No.	Radius	Angle [°]
12AAC733	2 µm	60°
12AAB405	5 µm	90°
12AAB417	10 µm	90°

mm

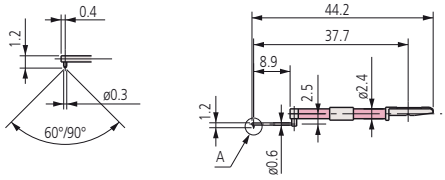

For extra-small hole

No.	Radius	Angle [°]
12AAJ662	250 µm	-

mm

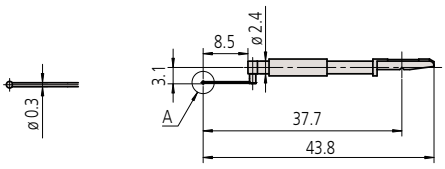

For ultra-small hole

All products to be sold to commercial customers. Product illustrations are without obligation. Product descriptions, in particular any and all technical specifications, are only binding when explicitly agreed upon. For suggested retail prices, please refer to the separate price list.

Mitutoyo

Optional Styli
for Surftest and Formtracer SV-C series

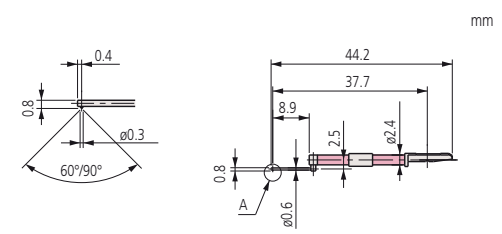

No.	Radius	Angle [°]
12AAC734	2 µm	60°
12AAB406	5 µm	90°
12AAB418	10 µm	90°

For ultra-small hole

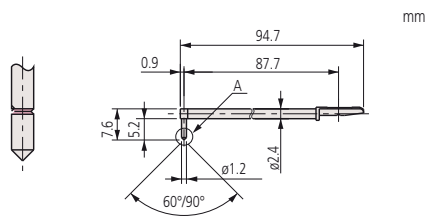

No.	Radius	Angle [°]
12AAC740	2 µm	60°
12AAB413	5 µm	90°
12AAB425	10 µm	90°

For deep hole [double-length]

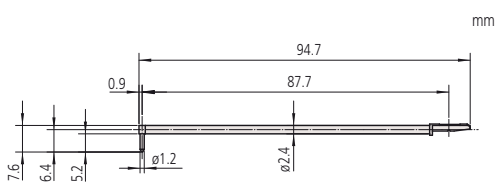

No.	Radius	Angle [°]
12AAE886	250 µm	60°

For rolling circle waviness [double-length]

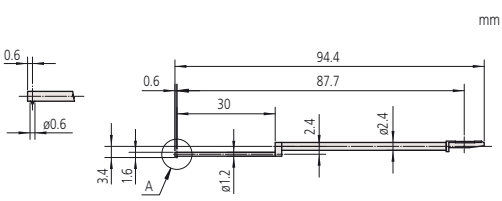

No.	Radius	Angle [°]
12AAE892	2 µm	60°
12AAE908	5 µm	90°

For small deep hole [double-length]

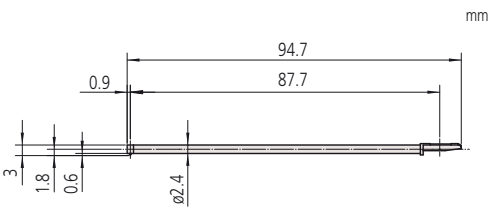

No.	Radius	Angle [°]
12AAE898	2 µm	60°
12AAE914	5 µm	90°

For deep hole [double-length]

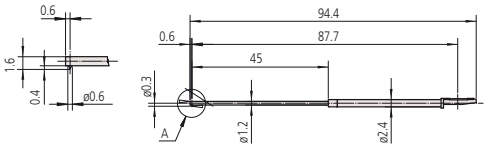

No.	Radius	Angle [°]
12AAE938	2 µm	60°
12AAE940	5 µm	90°

For small slotted hole [double-length]

All products to be sold to commercial customers. Product illustrations are without obligation. Product descriptions, in particular any and all technical specifications, are only binding when explicitly agreed upon. For suggested retail prices, please refer to the separate price list.

Optional Styli
for Surftest and Formtracer SV-C series

No.	Radius	Angle [°]
12AAC741	2 µm	60°
12AAB414	5 µm	90°
12AAB426	10 µm	90°

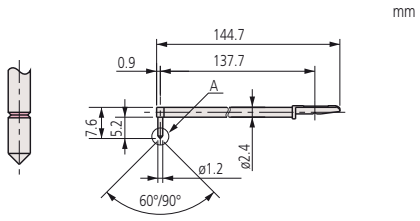

For deep hole [triple-length]

No.	Radius	Angle [°]
12AAC735	2 µm	60°
12AAB409	5 µm	90°
12AAB421	10 µm	90°

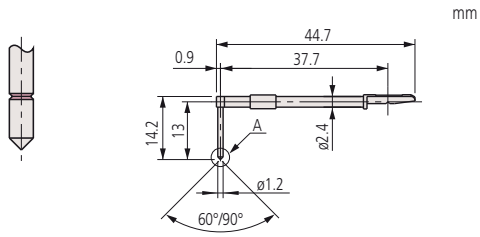

For deep groove 10 mm

No.	Radius	Angle [°]
12AAC736	2 µm	60°
12AAB408	5 µm	90°
12AAB420	10 µm	90°

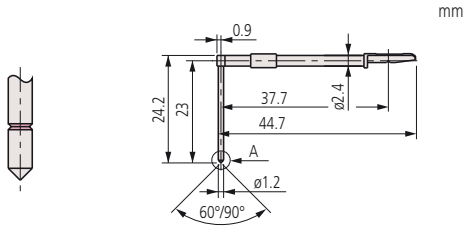

For deep groove 20 mm

No.	Radius	Angle [°]
12AAE893	2 µm	60°
12AAE909	5 µm	90°

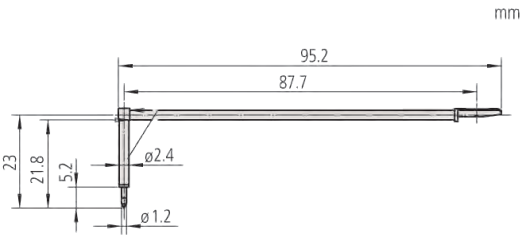

For deep groove 20 mm [double-length]

No.	Radius	Angle [°]
12AAC737	2 µm	60°
12AAB407	5 µm	90°
12AAB419	10 µm	90°

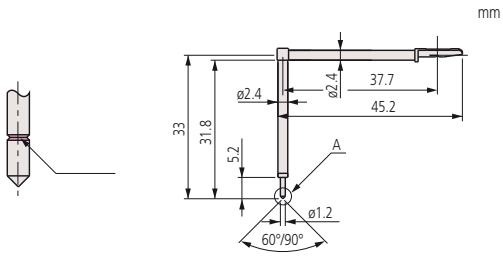

For deep groove 30 mm

All products to be sold to commercial customers. Product illustrations are without obligation. Product descriptions, in particular any and all technical specifications, are only binding when explicitly agreed upon. For suggested retail prices, please refer to the separate price list.

Optional Styli
for Surftest and Formtracer SV-C series

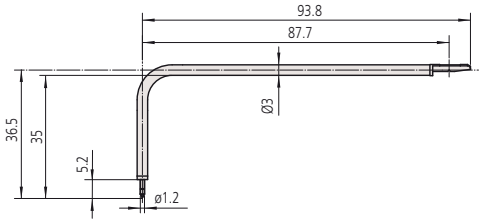

mm

No.	Radius	Angle [°]
12AAE894	2 µm	60°
12AAE910	5 µm	90°

For deep groove 30 mm [double-length]

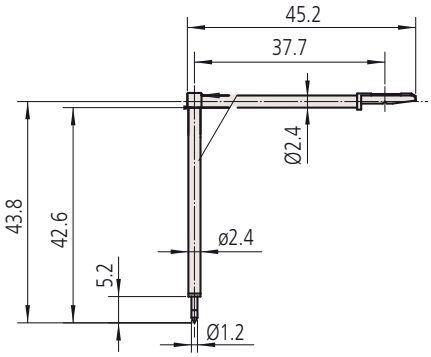

mm

No.	Radius	Angle [°]
12AAE895	2 µm	60°
12AAE911	5 µm	90°

For deep groove 40 mm

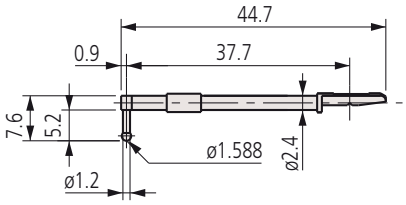

mm

No.	Radius
12AAB338	0,8 mm

For rolling circle waviness surface roughness (Roughness specimen 178-611 required)

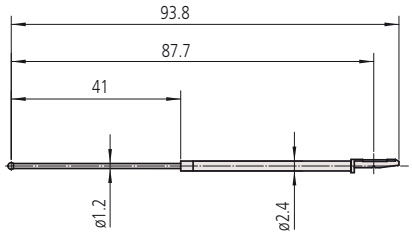

mm

No.	Radius
12AAE884	0,8 mm

For rolling circle waviness surface roughness [double-length] (178-611 required)

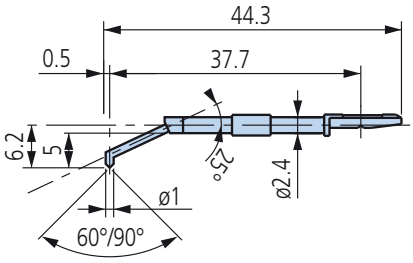

mm

No.	Radius	Angle [°]
12AAE899	2 µm	60°
12AAE915	5 µm	90°

For hole bottom

All products to be sold to commercial customers. Product illustrations are without obligation. Product descriptions, in particular any and all technical specifications, are only binding when explicitly agreed upon. For suggested retail prices, please refer to the separate price list.

Optional Styli
for Surftest and Formtracer SV-C series

No.	Radius	Angle [°]
12AAC739	2 µm	60°
12AAB412	5 µm	90°
12AAB424	10 µm	90°

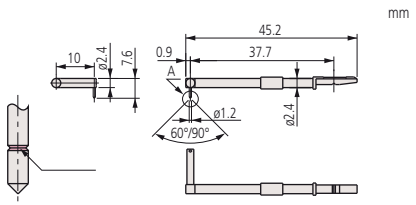

For eccentric arm

No.	Radius	Angle [°]
12AAM601	2 µm	60°
12AAM603	5 µm	60°

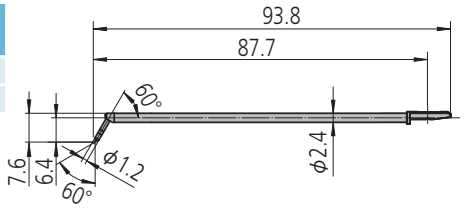

For corner hole [double-length]

No.	Radius	Angle [°]
12AAE897	2 µm	60°
12AAE913	5 µm	90°

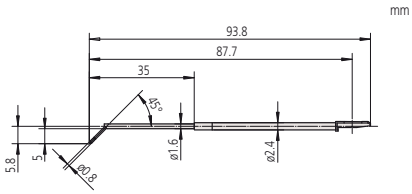

For corner hole [double-length]

No.	Radius	Angle [°]
12AAB339	2 µm	60°
12AAB410	5 µm	90°
12AAB422	10 µm	90°

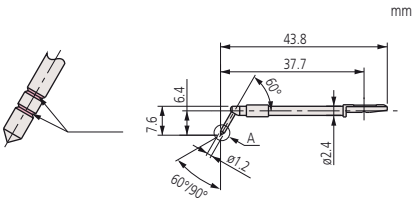

For gear tooth

No.	Radius	Angle [°]
12AAE896	2 µm	60°
12AAE912	5 µm	90°

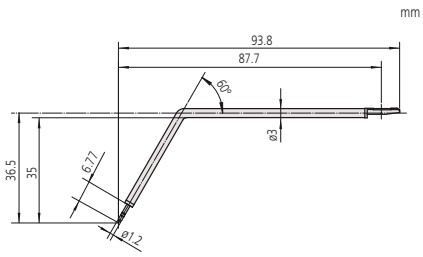

For gear tooth [double-length]

No.	Radius	Angle [°]
12AAC738	2 µm	60°
12AAB411	5 µm	90°
12AAB423	10 µm	90°

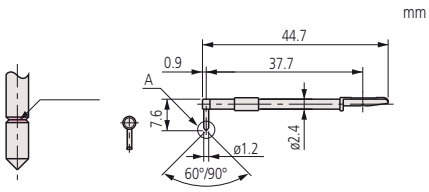

For knife-edge

All products to be sold to commercial customers. Product illustrations are without obligation. Product descriptions, in particular any and all technical specifications, are only binding when explicitly agreed upon. For suggested retail prices, please refer to the separate price list.

Mitutoyo

Optional Styli and Arms for Contracer and Formtracer SV-C Series

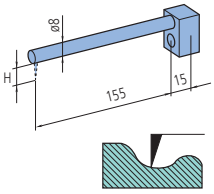

Arm Straight type
CV-2100

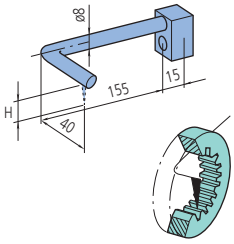

Arm Eccentric type
CV-2100

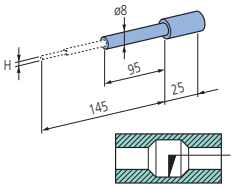

Arm for small-hole stylus
CV-2100

Applicable arms for CV-2100

No.	Arm	Arm No.	Compatible stylus height (H) [mm]
935110	Small hole	AB-11	0,4 / 1 / 2,5
935111	Straight type	AB-51	6
935112	Straight type	AB-61	12
935113	Straight type	AB-71	20
935114	Straight type	AB-81	30
935115	Straight type	AB-91	42
935116	Eccentric type	AB-52	6
935117	Eccentric type	AB-62	12
935118	Eccentric type	AB-72	20
935119	Eccentric type	AB-82	30
935120	Eccentric type	AB-92	42

Applicable Arms for CV-3200 / CV-4500 / SV-C3200 / SV-C4500 / SV-C4500CNC

No.	Arm	Arm No.	Compatible stylus height (H) [mm]
12AAQ762	Eccentric Arm	AB-37	SPH-5*, 6*, 7*, 8*, 9*
12AAM101	Straight type	AB-31	SPH-5*, 6*, 7*, 8*, 9*
12AAM103	Small hole	AB-33	SPH-41, SPH-42, SPH-43

Applicable Styli for CV-2100

No.	Stylus	Stylus No.	Stylus height (H) [mm]
932693	Small hole, carbide-tipped one-sided cut	SP-11	0,4
932694	Small hole, carbide-tipped one-sided cut	SP-12	1
932695	Small hole, carbide-tipped one-sided cut	SP-13	2,5
12AAE873	Small hole, carbide-tipped cone	SP-31	0,4
12AAE874	Small hole, carbide-tipped cone	SP-32	1
12AAE875	Small hole, carbide-tipped cone	SP-33	2,5

Applicable Styli for CV-3200 / CV-4500 / SV-C3200 / SV-C4500 / SV-C4500CNC

No.	Stylus	Stylus No.	Stylus height (H) [mm]
12AAM104	Small hole, carbide tipped one sided cut	SPH-41	2
12AAM105	Small hole, carbide tipped one sided cut	SPH-42	4
12AAM106	Small hole, carbide tipped one sided cut	SPH-43	6,5

Arm and stylus set

No.	Applicable models	Included arms	Included styli	Included arm stylus
12AAR587	CV-3200, CV-4500, SV-C3200, SV-C4500, SV-C4500CNC	AB-33, AB-37	SPH-41, -43, -51, -72, -76	
12AAR588	CV-4500, SV-C4500, SV-C4500CNC	AB-33, AB-37	SPH-41, -43, -51, -72, -76, SPHW-66, -76	SPHW-32

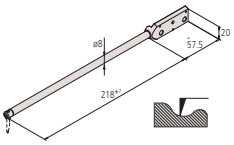

Arm straight type
CV-3200/CV-4500
SV-C3200/SV-C4500
SV-C4500CNC

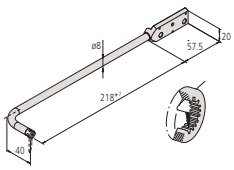

Arm eccentric type
CV-3200/CV-4500
SV-C3200/SV-C4500
SV-C4500CNC

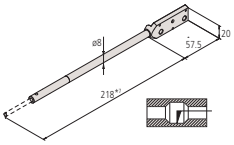

Arm for small-hole stylus
CV-3200/CV4500
SV-C3200/SV-C4500
SV-C4500CNC

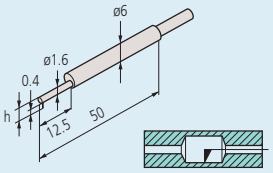

Small hole: 932693 / 12AAE873
Tip shape: Single bevel / Cone
Tip angle: 20° / 30°
Tip radius: 25 µm / 25 µm
Tip material: Carbide / Carbide

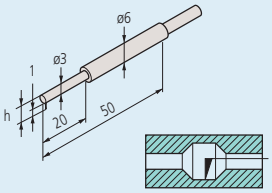

Small hole: 932694 / 12AAE874
Tip shape: Single bevel / Cone
Tip angle: 20° / 30°
Tip radius: 25 µm / 25 µm
Tip material: Carbide / Carbide

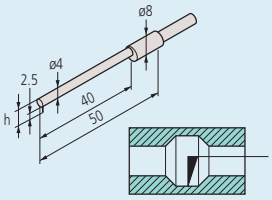

Small hole: 932695 / 12AAE875
Tip shape: Single bevel / Cone
Tip angle: 20° / 30°
Tip radius: 25 µm / 25 µm
Tip material: Carbide / Carbide

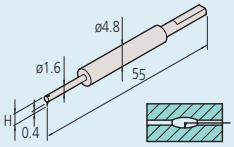

Small hole: 12AAM104
Tip shape: One-sided cut
Tip angle: 20°
Tip radius: 25 µm
Tip material: Carbide

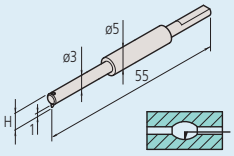

Small hole: 12AAM105
Tip shape: One-sided cut
Tip angle: 20°
Tip radius: 25 µm
Tip material: Carbide

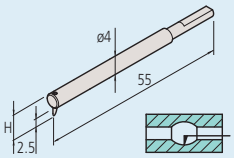

Small hole: 12AAM106
Tip shape: One-sided cut
Tip angle: 20°
Tip radius: 25 µm
Tip material: Carbide

All products to be sold to commercial customers. Product illustrations are without obligation. Product descriptions, in particular any and all technical specifications, are only binding when explicitly agreed upon. For suggested retail prices, please refer to the separate price list.

Optional Styli and Arms for Contracer and Formtracer SV-C Series

Styli

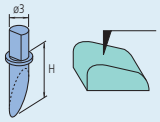

Single bevel
Tip angle: 12°
Tip radius: 25 µm
Tip material: Carbide

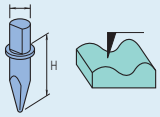

Cross ground
Tip angle: 20°
Tip radius: 25 µm
Tip material: Carbide

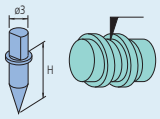

Cone
Tip angle: 30°/50°
Tip radius: 25 µm
Tip material: Carbide/Sapphire/Diamond
(355129: 50°, Diamond)

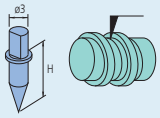

Cone
Tip angle: 20°
Tip radius: 25 µm
Tip material: Carbide

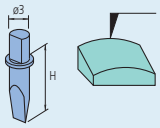

Knife edge
Tip angle: 20°
Edge width: 3 mm
Tip radius: 25 µm
Tip material: Carbide

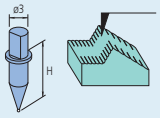

Ball
Ball: ø1 mm
Tip material: Carbide

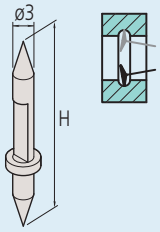

Both sides conical stylus
Tip angle: 30°
Tip radius: 25 µm
Tip material: Carbide

Applicable Styli for
CV-2100 / CV-3200/ CV-4500 / SV-C3200 / SV-C4500 / SV-C4500CNC

No.	Stylus	Stylus No.	Stylus height (H) [mm]
354882	Single bevel, carbide tipped	SPH-51	6
354883	Single bevel, carbide tipped	SPH-61	12
354884	Single bevel, carbide tipped	SPH-71	20
354885	Single bevel, carbide tipped	SPH-81	30
354886	Single bevel, carbide tipped	SPH-91	42
354887	Cross ground, carbide tipped	SPH-52	6
354888	Cross ground, carbide tipped	SPH-62	12
354889	Cross ground, carbide tipped	SPH-72	20
354890	Cross ground, carbide tipped	SPH-82	30
354891	Cross ground, carbide tipped	SPH-92	42
12AAE865	Cone, carbide-tipped angle 20°	SPH-57	6
12AAE866	Cone, carbide-tipped angle 20°	SPH-67	12
12AAE867	Cone, carbide-tipped angle 20°	SPH-77	20
12AAE868	Cone, carbide-tipped angle 20°	SPH-87	30
12AAE869	Cone, carbide-tipped angle 20°	SPH-97	42
354892	Cone, sapphire-tipped angle 30°	SPH-53	6
354893	Cone, sapphire-tipped angle 30°	SPH-63	12
354894	Cone, sapphire-tipped angle 30°	SPH-73	20
355129	Cone, diamond-tipped angle 50°	SPH-79	20
354895	Cone, sapphire-tipped angle 30°	SPH-83	30
354896	Cone, sapphire-tipped angle 30°	SPH-93	42
12AAA566	Cone, carbide-tipped angle 30°	SPH-56	6
12AAA567	Cone, carbide-tipped angle 30°	SPH-66	12
12AAA568	Cone, carbide-tipped angle 30°	SPH-76	20
12AAA569	Cone, carbide-tipped angle 30°	SPH-86	30
12AAA570	Cone, carbide-tipped angle 30°	SPH-96	42
354897	Knife edge, carbide tipped	SPH-54	6
354898	Knife edge, carbide tipped	SPH-64	12
354899	Knife edge, carbide tipped	SPH-74	20
354900	Knife edge, carbide tipped	SPH-84	30
354901	Knife edge, carbide tipped	SPH-94	42
354902	Ball, carbide tipped	SPH-55	6
354903	Ball, carbide tipped	SPH-65	12
354904	Ball, carbide tipped	SPH-75	20
354905	Ball, carbide tipped	SPH-85	30
354906	Ball, carbide tipped	SPH-95	42

Applicable Styli for only CV-4500 /SV-C4500 / SV-C4500CNC

No.	Stylus	Stylus No.	Stylus height (H) [mm]
12AAM095	Both sides conical stylus	SPHW-56	20
12AAM096	Both sides conical stylus	SPHW-66	32
12AAM097	Both sides conical stylus	SPHW-76	48
12AAM108	Both sides small hole arm stylus	SPHW-31	2,4
12AAM109	Both sides small hole arm stylus	SPHW-32	5
12AAM110	Both sides small hole arm stylus	SPHW-33	9

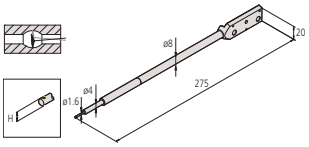

SPHW-31

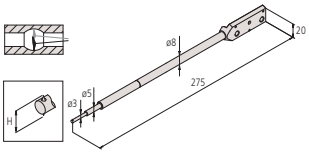

SPHW-32

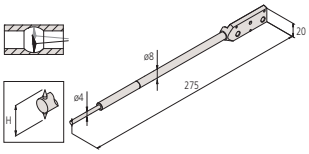

SPHW-33

All products to be sold to commercial customers. Product illustrations are without obligation. Product descriptions, in particular any and all technical specifications, are only binding when explicitly agreed upon. For suggested retail prices, please refer to the separate price list.

Mitutoyo

Optional Accessories for Surftest, Contracer and Formtracer

For SV series, SV-C series, CV series, CS series and CNC Models

Automatic-leveling table : 178-087 (for SV, CV, SV-C, CS)
Automatic-leveling table : 178-037 (for CNC Models)
This is a stage that performs fully automatic leveling as measurement starts, freeing the user from this troublesome operation. Fully automatic leveling can be done quickly by anyone. In addition, the operation is easy and reliable.

No.	Inclination adjustment angle	Maximum load [kg]	Effective table dimensions [mm]
178-087	± 2°	7	130 x 112
178-037	± 2°	7	130 x 112

178-087

Using 178-087

Micro-chuck
This chuck is suitable for clamping extra-small diameter workpieces (ø1,5 mm or less), which cannot be retained with the centering chuck.

No.	Dimensions [mm]	Retention range [mm]
211-031	ø118 x 48,5	OD: Ø 0 - Ø 1,5

211-031

Quick chuck
This chuck is useful when measuring small workpieces. You can easily clamp them with its knurled ring.

No.	Dimensions [mm]	Retention range [mm]
211-032	ø118 x 41	Inner latch : OD ø1 - ø36 Inner latch : ID ø16 - ø69 outer latch : OD ø25 - ø79

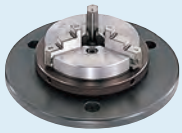
211-032

Y-axis table
for SV-3200, SV-C, CS and CV models (not CNC models)
Enables efficient, automatic measurement of multiple aligned workpieces and multiple points on a single measurement surface. It allows semi-automatic measurement with a semi-automatic with non CNC models by using these items.

No.	Travel range [mm]	Resolution	Positioning accuracy [µm]	Maximum load [kg]	Drive speed
178-097	200	0,05	±3	50	Max. 80 mm/s

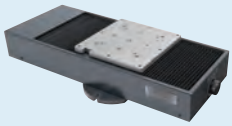
178-097

θ1-axis:*1
For efficient measurement in the axial / transverse directions. When measuring a cylindrical workpiece, automatic alignment can be performed in combination with the Y-axis table.
***1 = 12AAE630** mounting plate is required when directly installing on the base of the machine.

No.	Resolution	Rotational speed	Displacement	Maximum load [kg]
12AAD975	0,004°	Max. 10°/s	360°	12

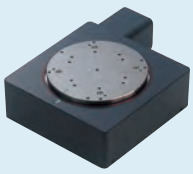
12AAD975

θ2-axis:*1
For efficent measurement of multiple points on a cylindrical workpiece and automate front/rear-side measurement.
***1 = 12AAE718** mounting plate is required when directly installing on the base of the machine.
***1 = 12AAE705** attachment plate is required when installing on θ1-axis table.
***1 = 12AAE707** mounting plate is required when directly installing on Y-axis table with automatic leveling table.

No.	Resolution	Rotational speed	Displacement	Maximum load [kg]
178-078	0,0072°	Max. 18°/s	360°	4

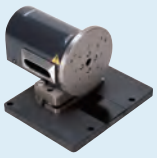
178-078

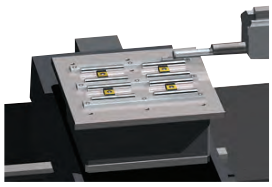
178-097
using Y-axis

12AAD975
using θ1-axis

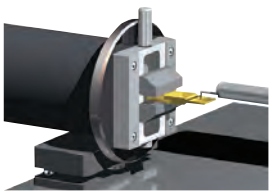
178-078
using θ2-axis

All products to be sold to commercial customers. Product illustrations are without obligation. Product descriptions, in particular any and all technical specifications, are only binding when explicitly agreed upon. For suggested retail prices, please refer to the separate price list.

Optional Accessories for Surftest, Contracer and Formtracer

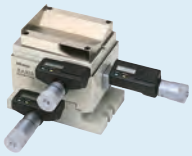

178-047

3 - Axis Adjustment Table

No.	Description
178-047	This table helps to make the alignment adjustments required when measuring cylindrical surfaces. The corrections for the pitch angle and the swivel angle are determined from a preliminary measurement and the Digimatic micrometers are adjusted accordingly. A flat-surfaced workpiece can also be leveled with this table.

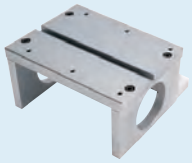

12AAG175

Calibration Stand

No.	Description
12AAG175	For mounting a roughness specimen or step gauge during calibration

Cross-travel Table

No.	Table top [mm]	XY travel [mm]
218-001	280 x 180	100 x 50
218-041	280 x 152	50 x 25

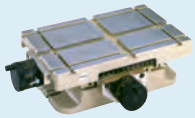

218-001

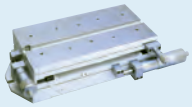

218-041

Digital Leveling Table

No.	Leveling range	Table top [mm]	XY travel [mm]
178-042-1	±1,5°	130 x 100	± 12,5

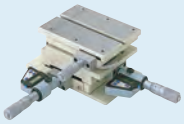

178-042-1

Leveling Table

No.	Leveling range	Table top [mm]	XY travel [mm]
178-043-1	±1,5°	130 x 100	± 12,5
178-016	±1,5°	130 x 100	40

178-043-1

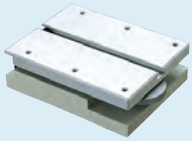

178-016

Precision Vise

No.	Description
178-019	Max. workpiece size : 36 mm Can be mounted on a leveling table

Rotary Vise

No.	Description
218-003	Two-slide jaw type Max. workpiece size : ø60 mm Minimum reading : 1°

178-019

V-Block

No.	Description
998291	Workpiece diameter : 1 mm to 160 mm Can be mounted on a leveling table

218-003

Vibration Isolator

No.	Packing size	Description
178-119	1000 x 1340 x 880 mm	For SV-2100/3200 series (wide base) For CV-3200/4500 series (wide base) For SV-C3200/4500 series (wide base)
178-115	600 x 1050 x 260 mm	Desktop type For SV-2100/3200 series (wide base) CV-3200/4500 series (wide base) SV-C3200/4500 (wide base)

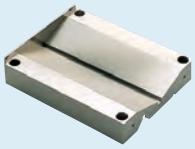

998291

All products to be sold to commercial customers. Product illustrations are without obligation. Product descriptions, in particular any and all technical specifications, are only binding when explicitly agreed upon. For suggested retail prices, please refer to the separate price list.

Mitutoyo

eco-fix Fixtures Form

eco-fix Kit Form S

Adapter plate Ø150mm usable with:

- Roundtest RA-10
- Roundtest RA-120
- Roundtest RA-120P
- Roundtest RA-1600
- THETA 1 for CV, SV, SV-C and CS types

No.
K551133

eco-fix Kit Form L

Adapter plate Ø200mm usable with:

- Roundtest RA-2200
- Roundtest RA-H5200
- Roundtest RA-2200CNC
- Roundtest RA-H5200CNC
- THETA 1 for CV, SV, SV-C and CS types

No.
K551134

All products to be sold to commercial customers. Product illustrations are without obligation. Product descriptions, in particular any and all technical specifications, are only binding when explicitly agreed upon. For suggested retail prices, please refer to the separate price list.

Roundtest RA-10

Series 211 - Form Measuring Instrument

This is a compact and affordable form measuring instrument.
The Roundtest RA-10 offers you the following benefits:

- It combines outstanding cost and performance with full measurement capabilities.
- The machine has a compact body with integrated electronics and printer, making it ideal for installation in space-restricted locations.
- You can easily view measurement results and recorded profiles on the large coloured LCD panel display.
- Despite being a low-priced model, the turntable with air bearings gives you rotational accuracy as high as (0,04+0,0006H)µm, assuring a precision that compares well with that of higher priced models.
- The control panel has large keys and an intuitive layout for easy operation.
- One-key calling function.
- One-key zero-set function.
- Support of 16 languages.
- It complies with EN ISO standard like 12181-1, 12181-2, 12781-1 and 12781-2.
- USB Communication Program – Microsoft® Excel ® based – to import results and create, save and print out inspection certificates on PC.

Specifications

Range	±1000 µm
Turntable	
Rotational accuracy	**Radial:** (0,04+0,0006H)µm H: Measuring height from turntable surface (mm) **Axial:** (0,04+0,0006X)µm X: Radial distance from center (mm)
Max. probing Ø	100 mm
Max. workpiece Ø	320 mm
Max. turntable loading [kg]	10 kg
Vertical column	
Max. probing height	152 mm
Display unit	
Data analysis items	Roundness, Coaxiality, Concentricity, Flatness, Runout radial
Printer	Built-in thermal line printer

Software
USB Communication Program
as a free download on www.mitutoyo.eu
(registration required)

Refer to FORM MEASUREMENT brochure

RA-10 with optional collet

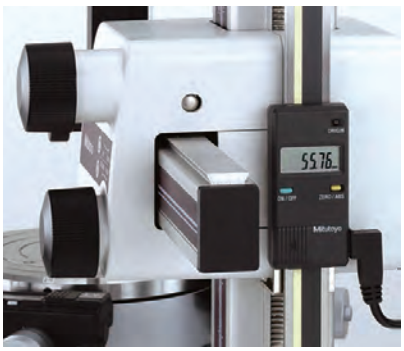

Z-axis scale unit

X-axis stop

All products to be sold to commercial customers. Product illustrations are without obligation. Product descriptions, in particular any and all technical specifications, are only binding when explicitly agreed upon. For suggested retail prices, please refer to the separate price list.

Roundtest RA-10

Series 211 - Form Measuring Instrument

Dimensions and accessories

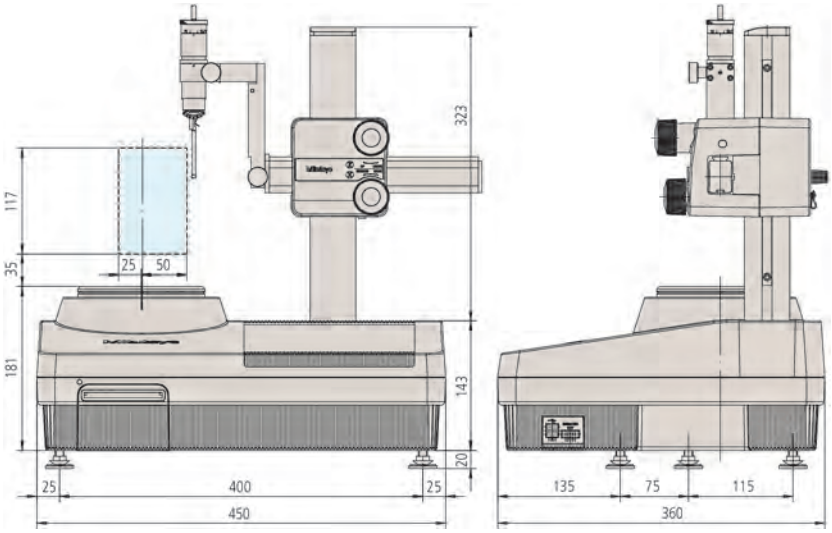

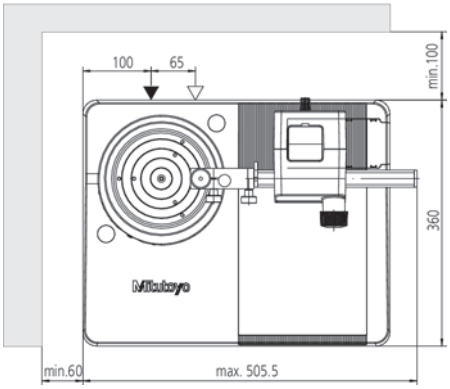

211-031

211-032

211-051

211-052

211-053

211-054

211-055

12AAH425

No.	Model	Max. workpiece ø [mm]	Max. probing Ø [mm]	Max. turntable loading [kg]
211-541D	RA-10	320	100	10

Optional accessories

No.	Description
12AAH402	Collet (Ø 0,5-1,0mm)*
12AAH403	Collet (Ø 1,0-1,5mm)*
12AAH404	Collet (Ø1,5-2,0mm)*
12AAH405	Collet (Ø 2,0-2,5mm)*
12AAH406	Collet (Ø2,5-3,0mm)*
12AAH407	Collet (Ø3,0-3,5mm)*
12AAH408	Collet (Ø3,5-4,0mm)*
12AAH409	Collet (Ø4,5-5,0mm)*
12AAH410	Collet (Ø5,0-6,0mm)*
12AAH411	Collet (Ø6,0-7,0mm)*
12AAH412	Collet (Ø 7,0-8,0mm)*
12AAH413	Collet (Ø8,0-9,0mm)*
12AAH414	Collet (Ø 9,0-10,0mm)*
211-013	Vibration damping stand
211-016	Reference hemisphere
211-031	Micro-chuck OD:1-1,5mm
211-032	Quick chuck OD:1-79, ID: 16-79 mm
211-045	Magnification checking gauge
211-051	Collet chuck holder (OD: 0,5-10mm)*
211-052	Quick chuck
211-053	V-block A (Screw clamp)
211-054	V-block B (spring clamp)
12AAH420	Spacer for reference hemisphere
12AAH425	Alignment table with D.A.T (mm)
12AAH427	Alignment table with mechanical heads
12AAH318	Z-axis scale unit
12AAH320	X-axis stop
356038	Stage for a low height workpiece
997090	Gauge block set for calibration

* Individual collet for collet chuck holder should be ordered separately.

Consumable spares

No.	Description
12AAH181	Printer paper (10 rolls)

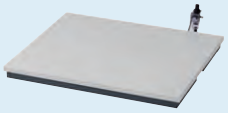
211-013

All products to be sold to commercial customers. Product illustrations are without obligation. Product descriptions, in particular any and all technical specifications, are only binding when explicitly agreed upon. For suggested retail prices, please refer to the separate price list.

Roundtest RA-120 and RA-120P

Series 211 - Form Measuring Instrument

These are compact, affordable and simple-to-use instruments for measuring roundform geometry. The Roundtest RA-120 and RA-120P offer you the following benefits:
– The turntable accuracy of (0,04+0,0006H)µm provides high level form analysis.

RA-120
– The RA-120 has a compact body with integrated electronics and printer, making it ideal for installation in space-restricted locations.
– You can easily view measurement results and recorded profiles on the large coloured LCD panel display.
– One-key operations.
– Support of 16 languages.
– It complies with EN ISO standard like 12181-1, 12181-2, 12781-1 and 12781-2
– USB Communication Program – Microsoft® Excel ® based – to import results and create, save and print out inspection certificates on PC.

RA-120P
– The RA-120P is a PC based model with all operations controlled via powerful ROUNDPAK software.
– Software ROUNDPAK gives you excellent possibilities for single measurement and part programming.

Specifications

Turntable	
Rotational accuracy	**Radial:** (0,04+0,0006H)µm H: Measuring height from turntable surface (mm) **Axial:** (0,04+0,0006X)µm X: Radial distance from center (mm)
Max. probing Ø	280 mm 380 mm in reverse position
Max. workpiece Ø	440 mm
Max. turntable loading [kg]	25 kg
Centering range	±3 mm
Leveling range	±1°
Vertical column	
Vertical travel [mm]	280 mm
Max. probing height	280 mm above turntable surface 480 mm in reverse position
Max. probing depth	100 mm (minimum ID: 30 mm)
Display unit	
Data analysis items	Roundness, Coaxiality, Flatness, Runout (radial), Runout (axial), Thickness deviation, Parallelism, Perpendicularity
Printer	Built-in thermal line printer (RA-120)
Software	**ROUNDPAK** (only RA-120P)

Software
USB Communication Program
as a free download on www.mitutoyo.eu
(registration required)
(only RA-120)

Refer to ROUNDTEST RA-120 brochure

Scan QR Code with your mobile device to watch the product lines video on YouTube

RA-120

RA-120P

All products to be sold to commercial customers. Product illustrations are without obligation. Product descriptions, in particular any and all technical specifications, are only binding when explicitly agreed upon. For suggested retail prices, please refer to the separate price list.

Roundtest RA-120 and RA-120P

Series 211 - Form Measuring Instrument

This is a compact roundness tester with D.A.T. (Digital Adjustment Table) function.
The Roundtest RA-120 and RA-120P give you the following benefits:
– The turntable displays centering and leveling adjustments digitally, making this challenging task easy enough for even an untrained operator to perform, through these four simple steps:

1. Preliminary measurement of two cross sections on the workpiece.
2. The centering and leveling adjustment values are displayed.
3. The digital micrometer heads on the rotary table are adjusted to match the values displayed.
4. Centering and leveling is complete. [Centering range : ±3 mm - Leveling range : ±1°]

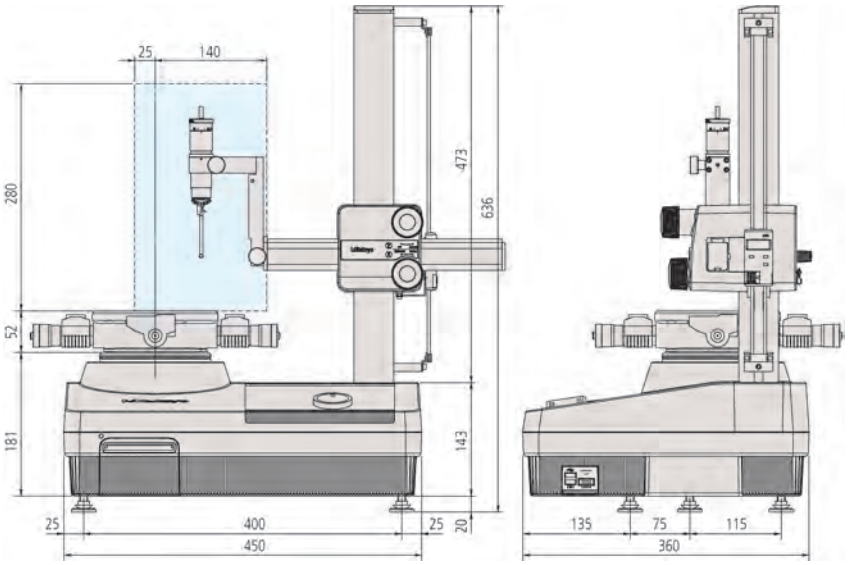

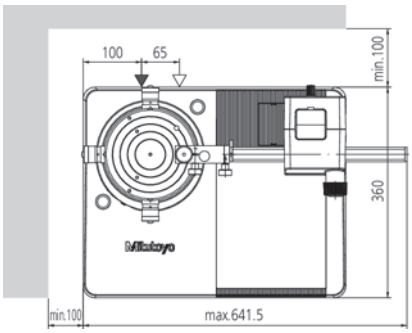

No.	Model	Max. workpiece ø [mm]	Max. probing Ø [mm]	Max. turntable loading [kg]
211-542D	RA-120 with D.A.T. function	440	280	25
211-544D	RA-120 with mechanical turntable	440	280	25
211-545D	RA-120P with D.A.T. function	440	280	25
211-547D	RA-120P with mechanical turntable	440	280	25

Additional Specifications

Optional accessories	Other optional and standard accessories are listed later in this section for accessories and styli.

Optional accessories

No.	Description
211-013	Vibration damping stand
211-014	Three jaw chuck OD:2-78, ID:25-68 mm
211-016	Reference hemisphere
211-031	Micro-chuck OD:1-1,5mm
211-032	Quick chuck OD:1-79, ID: 16-79 mm
211-045	Magnification checking gauge
211-061	Collect chuck OD:0,5-10mm
12AAH320	X-axis stop
356038	Stage for a low height workpiece
997090	Gauge block set for calibration

Consumable spares

No.	Description
12AAH181	Printer paper (10 rolls)

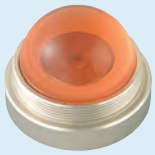

211-016

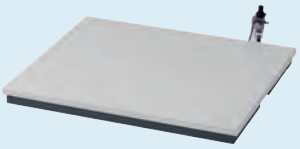

211-013

Z-axis scale unit (optional)

X-axis stop

Scan QR Code with your mobile device and watch our product videos on YouTube

All products to be sold to commercial customers. Product illustrations are without obligation. Product descriptions, in particular any and all technical specifications, are only binding when explicitly agreed upon. For suggested retail prices, please refer to the separate price list.

Roundtest RA-1600

Series 211 - Form Measuring System

This is a PC-compliant form measuring system which allows you to measure roundform geometry like cylindricity.
The Roundtest RA-1600 offers the following benefits:

- It is equipped with a high accurate turntable accuracy of (0,02+0,0006H)µm.
- You can carry out simple & accurate centering and leveling of the workpiece with D.A.T. (Digital Adjustment Table).
- The user friendly software, ROUNDPAK, gives you easy drag and drop usage.
- ROUNDPAK also has easy-to-use part programming and single measurement functions.
- A remote control box is including allowing you easy operation.
- There is also an auto follow function for easy and quick pre-centering of the workpiece.

RA-1600 (+desktop vibration isolator)

Specifications

Turntable	
Rotational accuracy	**Radial:** (0,02+0,0006H)µm H: Measuring height from turntable surface (mm) **Axial:** (0,02+0,0006X)µm X: Radial distance from center (mm)
Rotational speed	4, 6, 10 rpm
Max. probing Ø	280 mm
Max. workpiece Ø	560 mm
Max. turntable loading [kg]	25 kg
Centering range	±3 mm
Leveling range	±1°
Vertical column	
Max. probing height	300 mm above turntable surface
Max. probing depth	91 mm (minimum ID : ø32 mm) 50 mm (minimum ID : ø7 mm)
Straightness	0,2 µm / 100 mm 0,3 µm / 300 mm
Parallelism with turntable axis	1,5 µm / 300 mm
Software	**ROUNDPAK**

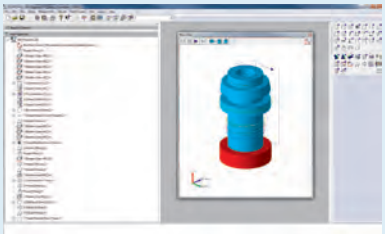

Measuring screen

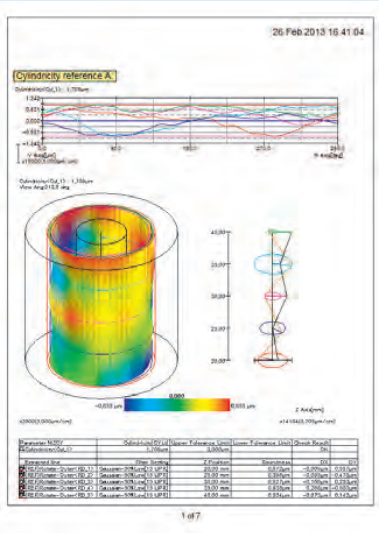

Result screen

ROUNDPAK
Simple to operate even with a full set of parameters and analysis functions.

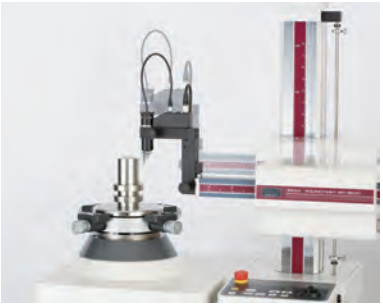

Spiral Measurement/Analysis (RA-1600)

Provided with a spiral measurement function that combines turntable rotation and rectilinear motion allowing cylindricity, coaxiality and other form characteristics to be measured in continuous data stream mode.

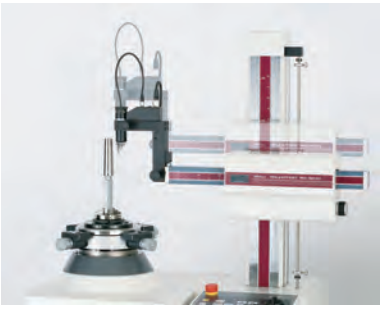

Measurement through X - axis tracking

Measurement while tracing is possible through a built-in linear scale in the X - axis.

All products to be sold to commercial customers. Product illustrations are without obligation. Product descriptions, in particular any and all technical specifications, are only binding when explicitly agreed upon. For suggested retail prices, please refer to the separate price list.

Mitutoyo

Roundtest RA-1600

Series 211 - Roundness Measuring System

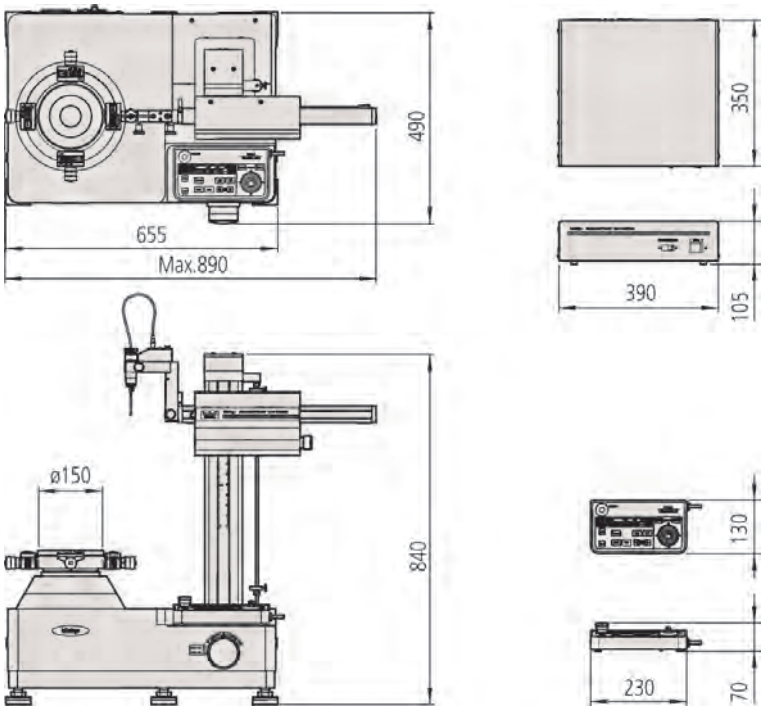

Dimensions

No.	Model	Max. workpiece ø [mm]	Max. probing Ø [mm]	Max. turntable loading [kg]
211-723D	RA-1600	560	280	25

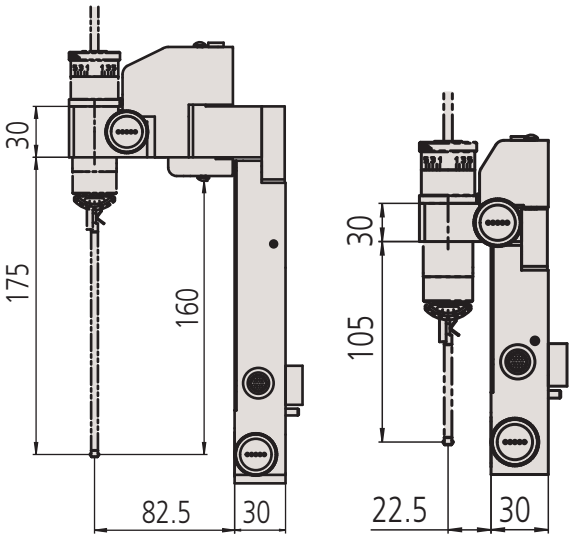

12AAF203 **12AAF204**

Additional Specifications

Optional accessories	Other optional and standard accessories are listed later in this section for accessories and styli.

Optional accessories

No.	Description
211-014	Three jaw chuck OD:2-78, ID:25-68 mm
211-031	Micro-chuck OD:1-1,5mm
211-032	Quick chuck OD:1-79, ID: 16-79 mm
211-045	Magnification checking gauge
211-061	Collect chuck OD:0,5-10mm
12AAL019	Side table
12AAL090	Sliding detector holder
12AAF203	Double length detector holder
12AAF204	Large diameter detector holder
12AAK110	Vibration isolator
12AAK120	Monitor arm
356038	Stage for a low height workpiece
997090	Gauge block set for calibration

Refer to ROUNDTEST RA-1600 brochure

All products to be sold to commercial customers. Product illustrations are without obligation. Product descriptions, in particular any and all technical specifications, are only binding when explicitly agreed upon. For suggested retail prices, please refer to the separate price list.

Roundtest RA-2200

Series 211 - Form Measuring Instrument

This is a highly accurate form measuring system which allows you to measure roundform geometry like cylindricity.
The Roundtest RA-2200 offers the following benefits:
- It has fully motorised axes movement.
- Its extremely high turntable accuracy of (0,02+0,00035H)µm gives you excellent form analysis.
- The user friendly software, ROUNDPAK, gives you easy drag and drop usage and a wide range of parameters.
- ROUNDPAK also has easy-to-use part programming and single measurement functions.
- A huge number of styli provides you with maximum flexibility.
- There is an auto follow function for easy and quick pre-centering of the workpiece.

There is a wide variety of models available to suit any application.
RA-2200DS/DH: These models have a navigation function supplied as standard, to quickly and simply guides you through the centering and leveling task. The models are equipped with the D.A.T. (Digital Adjustment Table).

RA-2200AS/AH: The models have an automatic centering and leveling turntable supplied as standard , freeing you from the centering and leveling task. The models are equipped with the A.A.T. (Automatic Adjustment Table).

RA-2200AS

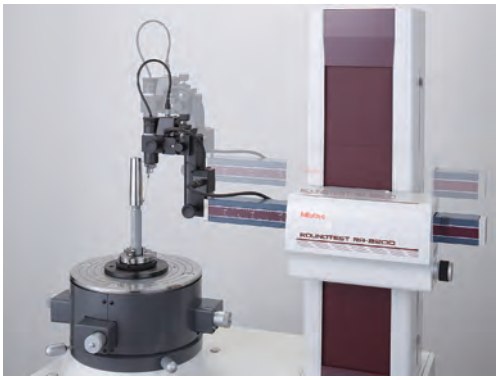

Automatic measurement

Specifications

Turntable	
Rotational accuracy	**Radial:** (0,02+0,00035H)µm H: Measuring height from turntable surface (mm) **Axial:** (0,02+0,00035X)µm X: Radial distance from center (mm)
Rotational speed	2, 4, 6, 10 rpm
Max. probing Ø	300 mm
Max. workpiece Ø	580 mm
Max. turntable loading [kg]	30 kg
Leveling range	±1°
Centering range	**DS / DH:** ±5 mm **AS / AH:** ±3 mm
Vertical column	
Max. probing height	**AS / DS :** 300 mm **AH / DH:** 500 mm above turntable surface
Max. probing depth	85 mm (minimum ID : ø32 mm) 50 mm (minimum ID : ø7 mm)
Straightness	**AS / DS :** 0,1 µm / 100 mm **AS / DS :** 0,15µm / 300 mm **AH / DH:** 0,25 µm / 500 mm
Parallelism with rotation center	**AS / DS :** 0,7 µm / 300 mm **AH / DH:** 1,2µm / 500 mm
Horizontal axis	
Straightness	0,7 µm / 150 mm
Perpendicularity to rotation center	1 µm / 150mm
Software	**ROUNDPAK** FORMTRACEPAK-AP (optional for roughness detection unit)

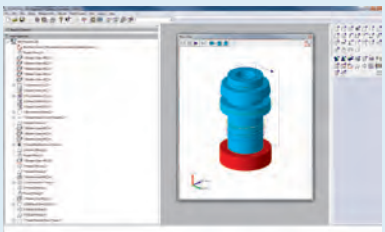

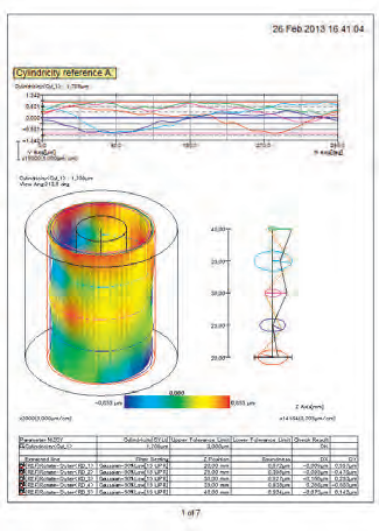

ROUNDPAK
Simple to operate even with a full set of parameters and analysis functions.

All products to be sold to commercial customers. Product illustrations are without obligation. Product descriptions, in particular any and all technical specifications, are only binding when explicitly agreed upon. For suggested retail prices, please refer to the separate price list.

Mitutoyo

Roundtest RA-2200

Series 211 - Roundness/Cylindricity Measuring System

Accessories and dimensions

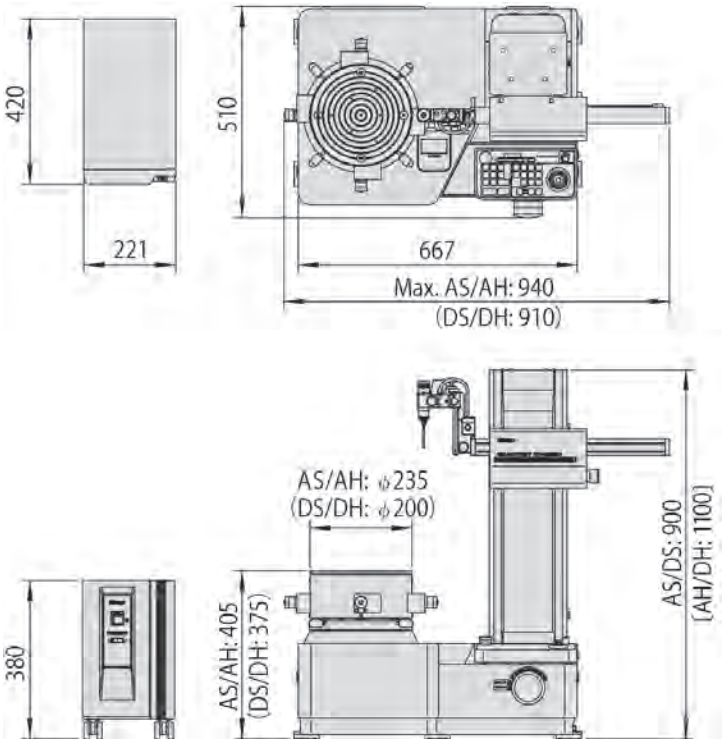

No.	Model	Centering/leveling adjustment 1*	Vertical travel [mm]	Max. workpiece ø [mm]	Max. probing Ø [mm]	Max. turntable loading [kg]
211-511D	RA-2200AS	AAT	300	580	300	30
211-512D	RA-2200AH	AAT	500	580	300	30
211-513D	RA-2200DS	DAT	300	580	300	30
211-515D	RA-2200DH	DAT	500	580	300	30

1* AAT : Automatic Adjustment Table
DAT : Digital Adjustment Table

Additional Specifications

Optional accessories	Other optional and standard accessories are listed later in this section for accessories and styli.

Optional accessories

No.	Description
211-014	Three jaw chuck OD:2-78, ID:25-68 mm
211-031	Micro-chuck OD:1-1,5mm
211-032	Quick chuck OD:1-79, ID: 16-79 mm
211-045	Magnification checking gauge
12AAL019	Side table
12AAF203	Double length detector holder
12AAF204	Large diameter detector holder
12AAK110	Vibration isolator
12AAK120	Monitor arm
356038	Stage for a low height workpiece
12AAF353	Roughness detection unit
178-396-2	Detector, 0,75mN

Refer to ROUNDTEST RA-2200 brochure

All products to be sold to commercial customers. Product illustrations are without obligation. Product descriptions, in particular any and all technical specifications, are only binding when explicitly agreed upon. For suggested retail prices, please refer to the separate price list.

Roundtest RA-H5200

Series 211 - High-precision Form Measuring Instrument

This is a highly accurate, precision form measuring system developed to give you the highest accuracy as well as high flexibility and analytical capability.
The Roundtest RA-H5200 offers the following benefits:

- Its integrated vibration isolator helps you to measure within the best conditions.
- It has a high measuring range and loading mass.
- The user friendly software, ROUNDPAK, gives you easy drag and drop usage and a wide range of parameters.
- ROUNDPAK also has easy-to-use part programming and single measurement functions.
- A.A.T. (Automatic Adjustment Table) gives you fully automatic centering and leveling.
- There is an auto follow function for easy and quick pre-centering of the workpiece.

Specifications

Turntable	
Rotational accuracy	**Radial:** (0,02+0,00035H)µm H: Measuring height from turntable surface (mm) **Axial:** (0,02+0,00035X)µm X: Radial distance from center (mm)
Rotational speed	2, 4, 6, 10 rpm
Max. probing Ø	400 mm
Max. workpiece Ø	680 mm
Max. turntable loading [kg]	65 kg 80 kg without auto centering
Centering range	±5 mm
Leveling range	±1°
Vertical column	
Max. probing height	**AS :** 350 mm **AH:** 550 mm above turntable surface
Max. probing depth	85 mm (minimum ID : ø32 mm) 50 mm (minimum ID : ø7 mm)
Straightness	**AS / AH :** 0,05 µm / 100 mm **AS :** 0,14µm / 350 mm **AH :** 0,2 µm / 550 mm
Parallelism with rotation center	**AS :** 0,2 µm / 350 mm **AH :** 0,32µm / 550 mm
Horizontal axis	
Straightness	0,4 µm / 200 mm
Perpendicularity to rotation center	0,5 µm / 200 mm
Software	**ROUNDPAK** FORMTRACEPAK-AP (optional for roughness detection unit)

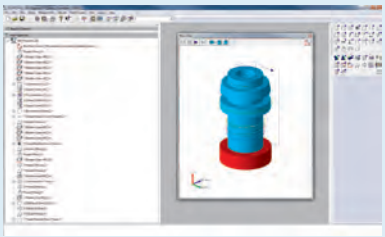

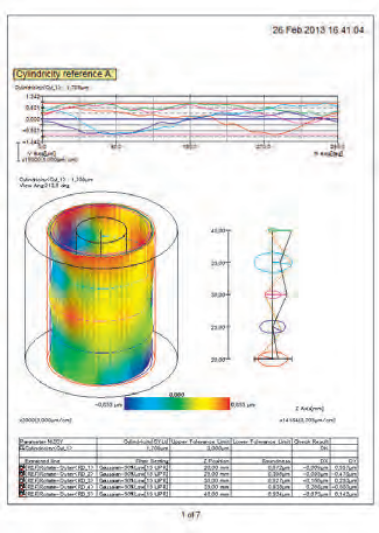

ROUNDPAK
Simple to operate even with a full set of parameters and analysis functions.

Highly accurate, automatic centering/leveling turntable
The performance of this turntable has been achieved through exceptional manufacturing accuracy of the critical components, in addition to a high-accuracy air-bearing that provides superior rigidity. The resulting rotational accuracy, the heart of a Roundtest measuring system, is world-class at 0.02+0.00035H µm.

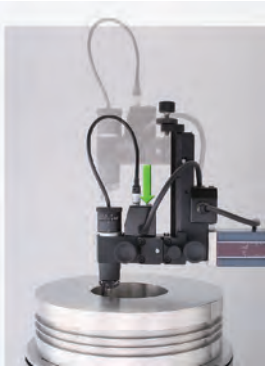

Sliding detector-unit holder provided as a standard feature
The detector-unit holder is equipped with a sliding mechanism, enabling one-touch measurement of a workpiece with a deep hole having a thick wall, which has been difficult with the conventional standard arm. Sliding distance : 112 mm.

All products to be sold to commercial customers. Product illustrations are without obligation. Product descriptions, in particular any and all technical specifications, are only binding when explicitly agreed upon. For suggested retail prices, please refer to the separate price list.

Roundtest RA-H5200

Series 211

Dimensions and accessories

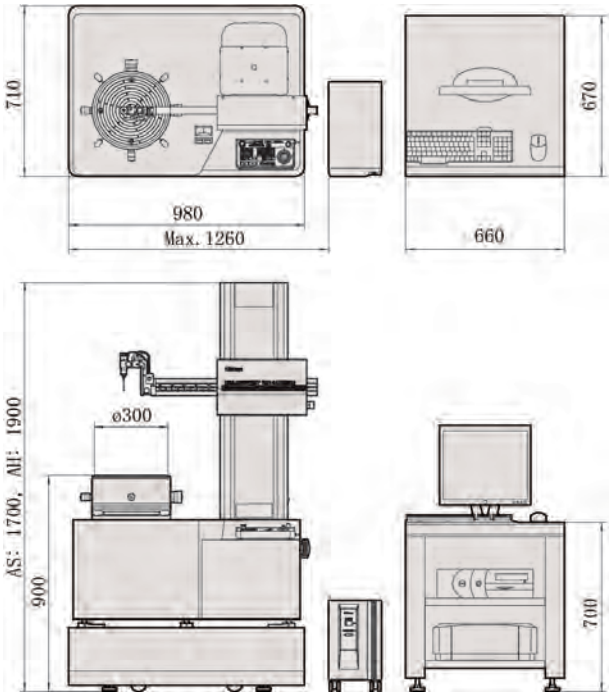

Dimensions

No.	Model	Centering/leveling adjustment 1*	Vertical travel [mm]	Max. workpiece ø [mm]	Max. probing Ø [mm]	Max. turntable loading [kg]
211-531D	RA-H5200AS	AAT	350	680	400	65
211-532D	RA-H5200AH	AAT	550	680	400	65

1* AAT : Automatic Adjustment Table

mm

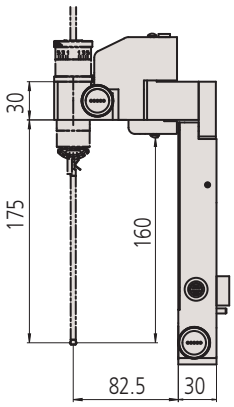

12AAF203

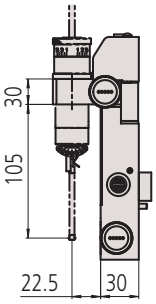

12AAF204

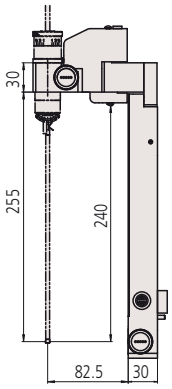

12AAF205

Additional Specifications

Optional accessories	Other optional and standard accessories are listed later in this section for accessories and styli.

Optional accessories

No.	Description
211-014	Three jaw chuck OD:2-78, ID:25-68 mm
211-031	Micro-chuck OD:1-1,5mm
211-032	Quick chuck OD:1-79, ID: 16-79 mm
211-045	Magnification checking gauge
12AAL019	Side table
12AAF203	Double length detector holder
12AAF204	Large diameter detector holder
12AAF205	Triple length holder for exta-deep holes
12AAF353	Roughness detection unit
178-396-2	Detector, 0,75mN

211-014

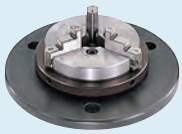

211-032

211-031

211-045

Refer to ROUNDTEST RA-H5200 brochure

All products to be sold to commercial customers. Product illustrations are without obligation. Product descriptions, in particular any and all technical specifications, are only binding when explicitly agreed upon. For suggested retail prices, please refer to the separate price list.

Roundtest Extreme RA-2200CNC

Series 211 - High-precision Form Measuring Instrument

This is a fully automatic CNC form measuring instrument that gives highly accurate results.
The Roundtest Extreme RA-2200CNC offers you the following benefits:

- It has a CNC controlled measuring system with orientation steps of 1°.
- The extremely high turntable accuracy of (0,02+0,00035H)µm gives you highly accurate form analysis.
- The user friendly software, ROUNDPAK, gives you easy drag and drop usage and a wide range of parameters.
- ROUNDPAK also has easy-to-use part programming and single measurement functions.
- An automatic centering and leveling turntable A.A.T. (Automatic Adjustment Table) is supplied as standard, freeing you from the centering and leveling task.

Specifications

Turntable	
Rotational accuracy	**Radial:** (0,02+0,00035H)µm H: Measuring height from turntable surface (mm) **Axial:** (0,02+0,00035X)µm X: Radial distance from center (mm)
Rotational speed	2, 4, 6, 10 rpm
Max. probing Ø	256 mm
Max. workpiece Ø	580 mm
Max. turntable loading [kg]	30 kg
Centering range	±3 mm
Leveling range	±1°
Vertical column	
Max. probing height	**AS :** 300 mm **AH:** 500 mm above turntable surface
Max. probing depth	104 mm (minimum ID : ø32 mm) 26 mm (minimum ID : ø12,7 mm)
Straightness	**AS / AH :** 0,1 µm / 100 mm **AS :** 0,15 µm / 300 mm **AH :** 0,25 µm / 500 mm
Parallelism with rotation center	**AS :** 0,7 µm / 300 mm **AH :** 1,2 µm / 500 mm
Horizontal axis	
Straightness	0,7 µm / 150 mm
Perpendicularity to rotation center	1 µm / 150 mm
Software	**ROUNDPAK** FORMTRACEPAK-AP (optional for roughness detection unit)

Optional accessories

No.	Description
12AAL019	Side table
12AAK110	Vibration isolator
12AAK120	Monitor arm
12AAG419	Roughness detection unit CNC, 0,75mN

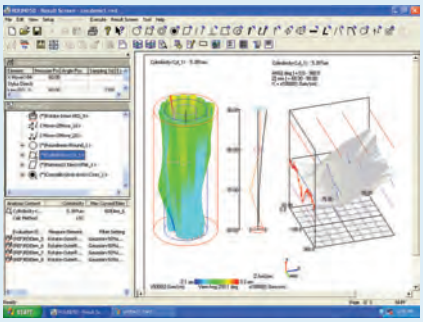

ROUNDPAK
Simple to operate even with a full set of parameters and analysis functions.

Refer to ROUNDTEST RA-2200 brochure

RA-2200 CNC
+ optional vibration isolator [12AAK110]
and side table [12AAL019]

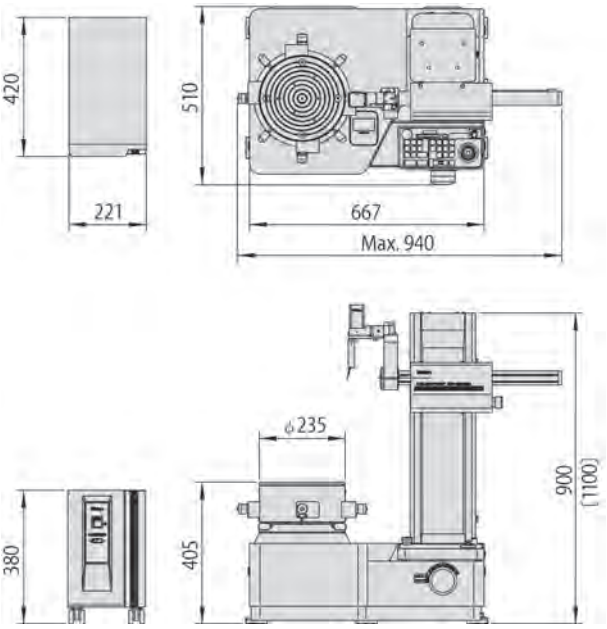

No.	Model	Centering/leveling adjustment 1*	Vertical travel [mm]	Max. work-piece ø [mm]	Max. probing Ø [mm]	Max. turntable loading [kg]
211-517D	RA-2200CNC AS	AAT	300	580	256	30
211-518D	RA-2200CNC AH	AAT	500	580	256	30

1* AAT : Automatic Adjustment Table

All products to be sold to commercial customers. Product illustrations are without obligation. Product descriptions, in particular any and all technical specifications, are only binding when explicitly agreed upon. For suggested retail prices, please refer to the separate price list.

Roundtest Extreme RA-H5200CNC

Series 211 - High-precision Roundness/Cylindricity Measuring System

This is a CNC form measuring instrument that combines high accuracy with automatic CNC measurements.
The Roundtest Extreme RA-H5200CNC offers you the following benefits:

- An integrated vibration isolator helps you to measure within best conditions.
- It will greatly improve your productivity and efficiency.
- You can take highly accurate, fast and operator-free measurements.
- The user friendly software, ROUNDPAK, gives you easy drag and drop usage and a wide range of parameters.
- ROUNDPAK also has easy-to-use part programming and single measurement functions.
- An automatic centering and leveling turntable A.A.T. (Automatic Adjustment Table) is supplied as standard, freeing you from the centering and leveling task.

RA-H5200CNC + side table [12AAL019]

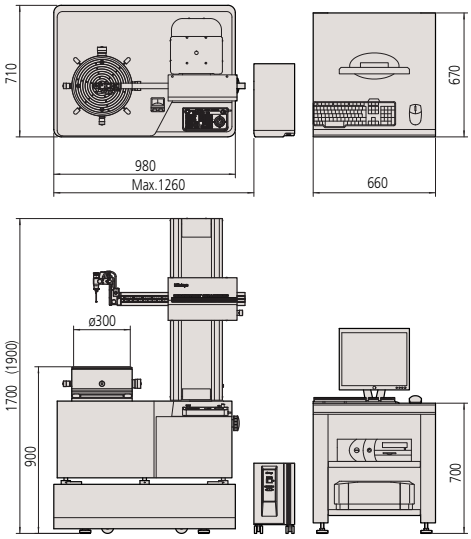

Dimensions

No.	Centering/leveling adjustment 1*	Model	Vertical travel [mm]	Max. work-piece ø [mm]	Max. probing Ø [mm]	Max. turntable loading [kg]
211-533D	AAT	RA-H5200CNC AS	350	680	356	65
211-534D	AAT	RA-H5200CNC AH	550	680	356	65

1* AAT : Automatic Adjustment Table

Specifications

Turntable	
Rotational accuracy	**Radial:** (0,02+0,00035H)µm H: Measuring height from turntable surface (mm) **Axial:** (0,02+0,00035X)µm X: Radial distance from center (mm)
Rotational speed	2, 4, 6, 10 rpm Auto centering: 20 rpm
Max. probing Ø	356 mm
Max. workpiece Ø	680 mm
Max. turntable loading [kg]	65 kg 80 kg without auto centering
Centering range	±5 mm
Leveling range	±1°
Vertical column	
Max. probing height	**AS :** 350 mm **AH:** 550 mm above turntable surface
Max. probing depth	104 mm (minimum ID : ø32 mm) 26 mm (minimum ID : ø12,7 mm)
Parallelism with rotation center	**AS :** 0,2 µm / 350 mm **AH :** 0,32 µm / 550 mm
Horizontal axis	
Straightness	0,4 µm / 200 mm
Perpendicularity to rotation center	0,5 µm / 200 mm
Software	**ROUNDPAK** FORMTRACEPAK-AP (optional for roughness detection unit)

Additional Specifications

Optional accessories	Other optional and standard accessories are listed later in this section for accessories and styli.

Optional accessories

No.	Description
12AAL019	Side table
12AAG419	Roughness detection unit CNC, 0,75mN

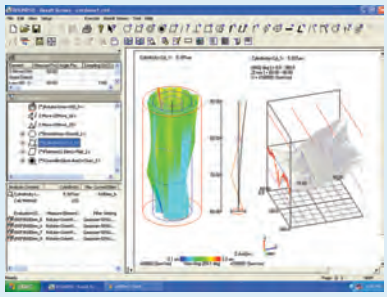

ROUNDPAK
Simple to operate even with a full set of parameters

All products to be sold to commercial customers. Product illustrations are without obligation. Product descriptions, in particular any and all technical specifications, are only binding when explicitly agreed upon. For suggested retail prices, please refer to the separate price list.

Roundtest Extreme RA-6000CNC

Series 211 – Large size Form Measuring Instrument

This is a fully automatic CNC form measuring instrument for heavy and accurate workpieces. The Roundtest Extreme RA-6000CNCbears the following benefits:

- Huge measuring range of 1050mm in height for long workpieces
- Wide probing range enables measurements of form parameters of huge-diameter workpieces
- Maximum loading capacity of 350kg for heavy and big size workpieces
- Highly-accurate measurements of large workpieces
- Fully automatic measurement provides fast and accurate processing
- ROUNDPAK software also comprises easy-to use part programing and single measurement functions
- A highly accurate automatic centering and leveling turntable A.A.T. (Automatic Adjustment Table) is supplied as standard, rendering manual centering and leveling redundant

Specifications

Turntable	
Rotational accuracy	**Radial:** (0,05+0,0006H)µm H: Measuring height from turntable surface (mm) **Axial:** (0,05+0,0006X)µm X: Radial distance from center (mm)
Rotational speed	2, 4, 6 rpm
Max. turntable loading [kg]	350 kg
Centering range	±5 mm
Leveling range	±1°
Vertical column	
Max. probing height	1050 mm

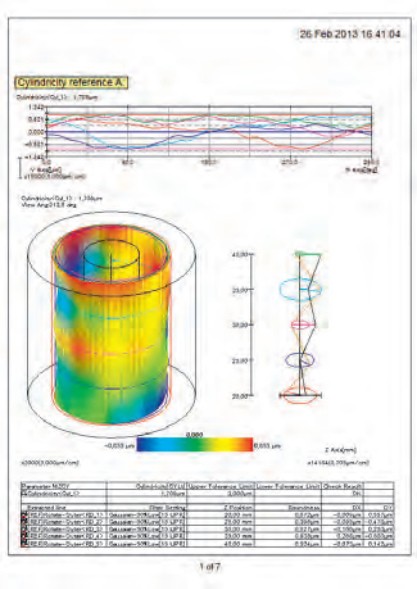

ROUNDPAK
Simple to operate even with a full set of parameters and analysis functions

RA-6000CNC

No.	Model	Centering/leveling adjustment 1*	Max. turntable loading [kg]	Vertical travel [mm]	Max. work-piece ø [mm]	Max. probing Ø [mm]
211-591D	RA-6000CNC	AAT	350	1050	900	880

1* AAT : Automatic Adjustment Table

All products to be sold to commercial customers. Product illustrations are without obligation. Product descriptions, in particular any and all technical specifications, are only binding when explicitly agreed upon. For suggested retail prices, please refer to the separate price list.

Optional Styli for Roundtest

Interchangeable styli for RA-10, RA-120, RA-120P, RA-1600, RA-2200, RA-H5200

12AAL021 - Standard
ø 1,6 mm tungsten carbide

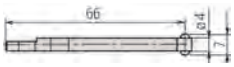

12AAL022 - Notch
ø 3 mm tungsten carbide

12AAL023 - Deep groove
R 0,25 mm sapphire

12AAL024 - Corner
R 0,25 mm sapphire

12AAL025 - Cutter mark
R 15 mm tungsten carbide

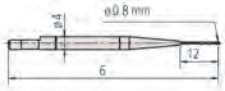

12AAL026 - Small hole
ø 0,8 mm tungsten carbide

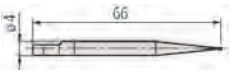

12AAL027- Small hole
ø 1 mm tungsten carbide

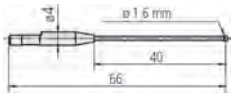

12AAL028 - Small hole
ø 1,6 mm tungsten carbide

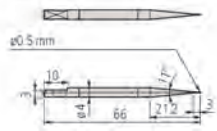

12AAL029- Extra small hole
ø 0,5 mm tungsten carbide

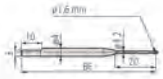

12AAL030- ø 1,6 mm ball
ø 1,6 mm tungsten carbide

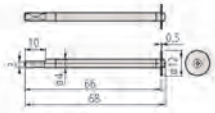

12AAL031- Disc
ø 12 mm

12AAL032- Crank
ø 0,5 mm tungsten carbide

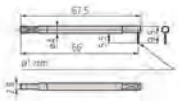

12AAL033- Crank
ø 1 mm tungsten carbide

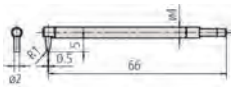

12AAL034- Flat surface
Tungsten carbide

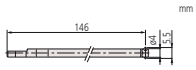

12AAL035- 2X-long standard
ø 1,6 mm tungsten carbide

12AAL036- 2X-long notch
ø 3 mm tungsten carbide

12AAL037- 2X-long deep groove
R 0,25 mm sapphire

12AAL038- 2X-long corner
R 0,25 mm sapphire

12AAL039- 2X-long type cutter mark
R 15 mm tungsten carbide

12AAL040- 2X-long small hole
ø 1 mm tungsten carbide

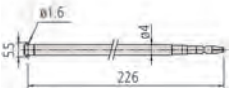

12AAL041- 3X-long standard
ø 1,6 mm tungsten carbide

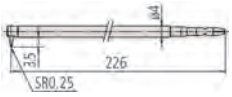

12AAL042- 3X-long deep groove
R 0,25 mm sapphire

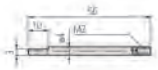

12AAL043- Stylus shank
for mounting M2 - CMM stylus

12AAL044- Stylus shank groove
for mounting M2 - CMM stylus

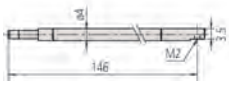

12AAL045- Stylus shank 2X groove
for mounting M2 - CMM stylus

Standard accessories

No.	Description
12AAL021	Standard stylus

Optional accessories

No.	Description
12AAL022	Stylus for notches, Ø3 mm, tungsten carbide
12AAL023	Stylus for deep groove, R 0,25 mm, Sapphire
12AAL024	Stylus for corner, R 0,25 mm, Sapphire
12AAL025	Stylus for cutter marks, R 15 mm, tungsten carbide
12AAL026	Stylus for small holes, Ø0,8 mm, tungsten carbide
12AAL027	Stylus for small holes, Ø1 mm, tungsten carbide
12AAL028	Stylus for small holes, Ø1,6 mm, tungsten carbide
12AAL029	Stylus for extra small hole, Ø0,5 mm, tungsten carbide
12AAL030	Stylus ball type, Ø1,6 mm, tungsten carbide
12AAL031	Stylus disc type, Ø12 mm
12AAL032	Stylus for cranks, Ø0,5 mm, tungsten carbide
12AAL033	Stylus for cranks, Ø1 mm, tungsten carbide
12AAL034	Stylus for flat surface, tungsten carbide
12AAL035	Stylus 2X-long standard type, Ø1,6 mm, tungsten carbide*1
12AAL036	Stylus 2X-long type for notches, Ø3 mm, tungsten carbide*1
12AAL037	Stylus 2X-long type for deep grooves, R 0,25 mm, Sapphire*1
12AAL038	Stylus 2X-long type for corners, R 0,25 mm, Sapphire*1
12AAL039	Stylus 2X-long type for cutter marks, R 15 mm, tungsten carbide*1
12AAL040	Stylus 2X-long type for small hole, Ø1 mm, tungsten carbide*1
12AAL041	Stylus 3X-long standard type, Ø1,6 mm, tungsten carbide*2
12AAL042	Stylus 3X-long type for deep grooves, R 0,25 mm, Sapphire*2
12AAL043	Stylus shank, for mounting M2-CMM stylus
12AAL044	Stylus shank for grooves, for mounting M2-CMM stylus
12AAL045	Stylus shank 2X-long type for grooves, for mounting M2-CMM stylus*1

*1 Not available for RA-10, RA-120, RA-120P
*2 Measuring is only possible in the vertical direction

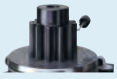

Notches

Flat surface

Cutter marks

Corner

Small hole

All products to be sold to commercial customers. Product illustrations are without obligation. Product descriptions, in particular any and all technical specifications, are only binding when explicitly agreed upon. For suggested retail prices, please refer to the separate price list.

Optional Styli for Roundtest

Interchangeable styli for RA-2200CNC, RA-H5200CNC, RA-6000CNC

Standard accessories

No.	Description
12AAE301	Stylus standard type for CNC, Ø1,6 mm, tungsten carbide
12AAE302	Stylus for flat surfaces for CNC, Ø1,6 mm, tungsten carbide

Optional accessories

No.	Description
12AAE303	Ball stylus for CNC, Ø1,6 mm, tungsten carbide
12AAE304	Ball stylus for CNC, Ø0,8 mm, tungsten carbide
12AAE305	Ball stylus for CNC, Ø0,5 mm, tungsten carbide
12AAE306	Stylus for deep holes, Ø1,6 mm, tungsten carbide
12AAE307	Stylus for deep holes, Ø1,6 mm, tungsten carbide
12AAE308	Stylus for deep grooves, Ø1,6 mm, tungsten carbide
12AAE309	Stylus for notches, Ø3,0 mm, tungsten carbide
12AAE310	Stylus for grooves, Ø1,6 mm, tungsten carbide

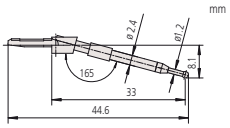

12AAE301 - Standard
ø 1,6 mm tungsten carbide

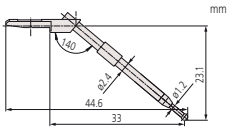

12AAE302 - Flat surface
ø 1,6 mm tungsten carbide

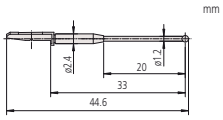

12AAE303 - ø 1,6 mm ball
ø 1,6 mm tungsten carbide

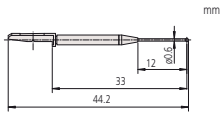

12AAE304 - ø 0,8 mm ball
ø 0,8 mm tungsten carbide

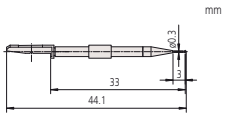

12AAE305 - ø 0,5 mm ball
ø 0,5 mm tungsten carbide

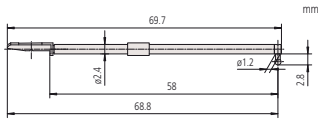

12AAE306 - Deep hole
ø 1,6 mm tungsten carbide

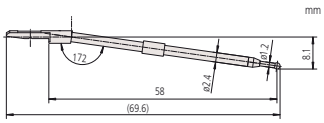

12AAE307 - Deep hole
ø 1,6 mm tungsten carbide

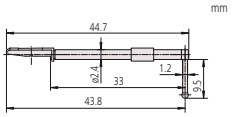

12AAE308 - Deep groove
ø 1,6 mm tungsten carbide

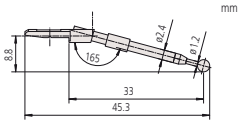

12AAE309 - Notch
ø 3 mm tungsten carbide

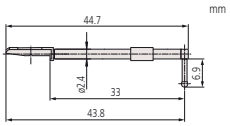

12AAE310 - Groove
ø 1,6 mm tungsten carbide

All products to be sold to commercial customers. Product illustrations are without obligation. Product descriptions, in particular any and all technical specifications, are only binding when explicitly agreed upon. For suggested retail prices, please refer to the separate price list.

Mitutoyo

Optional Accessories for Roundtest

Optional accessories for Roundtest and Roundtest Extreme

Auxiliary stage for a low-height workpiece

No.	Description
356038	Used for measuring a workpiece whose diameter is 40 mm or less and whose height is 20 mm or less

Chuck - Quick chuck

This Chuck is useful when measuring small workpieces. You can easily clamp them with its knurled ring.

No.	Holding capacity [mm]	External dimensions [mm]
211-032.	Internal jaw: ID = ø 16 - 69 External jaw: OD = ø 1 - 79	ø118 x 41
211-031.	Internal jaw: ø 0,1 - 1,5	ø 107 x 48,5

Chuck - Three jaw chuck (key operated)

No.	Holding capacity [mm]	External dimensions [mm]
211-014	Internal jaw: ID = ø 25 - 68 Internal jaw: OD = ø 2 - 35 External jaw: OD = ø 35 - 78	ø157 x 70,6

Cylindric square

No.	Cylindricity [µm]	Roundness [µm]	Perpendicularity [µm]	Straightness [µm]
350850	2	0,5	3	1

Gauge block set for calibration

No.	Description
997090	Standard accessory for RA-2200,RA-2200CNC Standard accessory for RA-H5200 and RA-H5200CNC

Magnification checking gauge

No.	Max. calibration range [µm]	Graduation [µm]
211-045	400	0,2

Origin point gauge

No.	Description
998382	Standard accessory for RA-1600, RA-2200 and RA-H5200

Vibrator isolator and accessories

No.	Vibration isolation method	External dimensions [mm]	Description
178-025	Air suspension Diaphragm isolation system	(WxDxH) 750x550x59	For RA-2200 and RA-2200CNC
178-024			Stand for RA-2200 and RA-2200CNC
12AAL019		660 x 670 x 700	Side table
12AAK110		830 x 800 x 700	Vibration isolator
12AAK120			Monitor arm

12AAK110 + 12AAK120

12AAK110 + 12AAL019

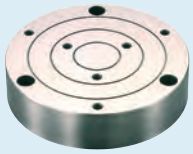

356038

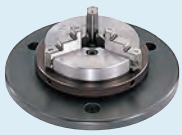

211-032

211-031

211-014

350850

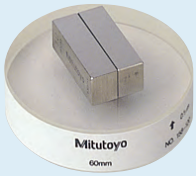

997090

211-045

998382

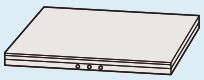

178-025

All products to be sold to commercial customers. Product illustrations are without obligation. Product descriptions, in particular any and all technical specifications, are only binding when explicitly agreed upon. For suggested retail prices, please refer to the separate price list.

Micro-Vickers Hardness HM-Series
Page 536

Vickers Hardness HV-Series
Page 539

Rockwell, Rockwell Superficial, Brinell
Page 546

Portable Hardness Tester
Page 551

Reference Material Blocks
Page 554

All products to be sold to commercial customers. Product illustrations are without obligation. Product descriptions, in particular any and all technical specifications, are only binding when explicitly agreed upon. For suggested retail prices, please refer to the separate price list.

Micro-Vickers Hardness Testing Machines HM-210/220

Series 810

This is a high performance hardness testing machine that uses advanced technology and is ideal for quality control. The HM-210/220 series offers you the following benefits:

- Touchscreen and software controlled types
- Its electromagnetic generation system enables nonstop setup for testing force.
- A high performance optical system provides a high quality image of the indentation load.
- A long working distance greatly reduces the possibility of collision.
- A range of six different objectives: 10X, 20X, 50X and 100X for measuring indentation images, and 2X and 5X for enabling wide-range overview images for positioning of indentation patterns.
- LED lighting gives you an observation image in natural colour, with better contrast, as well as longer operation due to lower power consumption.
- You can set different kinds of conditions on a touch panel, and display test results for easy operation.
- Software AVPAK-20 offers a multitude of options for automatic measurement and statistics.
- Test forces starting from as low as **0,4903 x 10-3N** (0,05gf) as well as standard test forces

Touchscreen type

Software type

HM-210

Model	HM-210	HM-210.
No.	**810-401D**	**810-404D**
Test force	**mN: 98,07; 196,1; 294,2; 490,3; 980,7; 1961; 2942; 4903; 9807** (gf) 10; 20; 30; 50; 100; 200; 300; 500; 1000	**mN: 98,07; 196,1; 294,2; 490,3; 980,7; 1961; 2942; 4903; 9807** (gf) 10; 20; 30; 50; 100; 200; 300; 500; 1000
System	System A	System A

HM-220

Model	HM-220	HM-220.
No.	**810-406D**	**810-409D**
Test force	**mN: 0,4903; 0,9807; 1,961; 2,942; 4,903; 9,807; 19,61; 29,42; 49,03; 98,07; 196,1; 294,2; 490,3; 980,7; 1961; 2942; 4903; 9807; 19610** (gf): 0,05; 0,1; 0,2; 0,3; 0,5; 1; 2; 3; 5; 10; 20; 30; 50; 100; 200; 300; 500; 1000; 2000	**mN: 0,4903; 0,9807; 1,961; 2,942; 4,903; 9,807; 19,61; 29,42; 49,03; 98,07; 196,1; 294,2; 490,3; 980,7; 1961; 2942; 4903; 9807; 19610** (gf): 0,05; 0,1; 0,2; 0,3; 0,5; 1; 2; 3; 5; 10; 20; 30; 50; 100; 200; 300; 500; 1000; 2000
System	System B / C / D	System B / C / D

Specifications

Standard	ISO 6507-2, JIS B 7725
Indenter / Objective turret	Motor driven and manual operation
Data output	RS-232C, Digimatic, USB 2 interface
XY stage [mm]	**Travel range system A + B**: 25 x 25 / 50 x 50 manual **Travel range system C + D :** 50 x 50 / 100 x 100 motorized
Arbitrary test force	1 type [Default: 245,2mN (25gf)]
Control panel	Built-in touch panel, 5,7" Color LCD (HM-210A/220A for System A), Control software (PC for System B/C/D)
External dimensions Main unit mass	System A: 315(W)×671(D) ×595(H)mm/38,5kg System B/C/D: 315(W)×586(D)×741(H)mm/37,4kg
Functions	Calculation of Vickers / Knoop*2 hardness, and ceramic fracture toughness based on IF method (JIS R1697), 3 display format (standard, list, simple), GO/NG judgment, test condition guide, curve and user correction, hardness corresponding value, statistics calculation
Objective lens unit	Up to 4 pcs. mountable (one mounted 50X as standard)
Output	Digimatic, serial, USB2 series A (for memory)*1, USB2 B Type (for system communication)
Resolution of diagonal length of an indentation	Objective lens less than 50X: 0,1µm (Objective lens more than 50X: 0,01µm)
Specimen dimensions	System A/B: height 133mm, depth 160mm (when using manual XY stage 25X25) System C: height 112mm, depth 160mm, System D: height 72mm, depth 160mm
Test force control	Electromagnetic generation of force (force motor) and automatic control (load, duration, unload)
Turret drive	Motor-driven and manual operation

Power turret with 2 indenter mounts and 4 objective mounts

Hardness Testing Machines brochure on request

For a list of optional accessories, refer to the following page.
Hardness test blocks can be found in the Hardness Testing Machines brochure.

All products to be sold to commercial customers. Product illustrations are without obligation. Product descriptions, in particular any and all technical specifications, are only binding when explicitly agreed upon. For suggested retail prices, please refer to the separate price list.

Micro-Vickers Hardness Testing Machines HM-210/220

Manual or complete automatic testing

Optional accessories

No.	Description
19BAA062M PA	Knoop diamond indenter ISO 4545 cert., M400 HK0.01 HM-100, HM-200, MVK Series
63ETB601	Reference material Vickers ISO 6507-3, 500 HV0,1
63ETB606	Reference material Vickers ISO 6507-3, 750 HV0,1
63ETB635	Reference material Vickers ISO 6507-3, 500 HV0,3
63ETB640	Reference material Vickers ISO 6507-3, 750 HV0,3
63ETB670	Reference material Vickers ISO 6507-3, 500 HV1
63ETB675	Reference material Vickers ISO 6507-3, 750 HV1
810-017	Special vise, (opening width 100mm)
810-013	Sheet specimen table
810-014	Thin specimen table, (horizontal type)
810-015	Thin specimen table, (vertical type)
810-019	Tilting specimen table
810-020	Adjustable specimen holder, Ø15-30mm
810-018	Rotary table, 360°
810-084	Rotatable adjustable specimen table, Ø15-30mm / 360°
810-085	Sheet specimen table
810-095	Rotary tilting specimen table, vise Ø15-50mm
375-056	Calibration Micro Scale
810-650-1	Resin mold specimen table, Ø25.4 mm
810-650-2	Resin mold specimen table, Ø30 mm
810-650-3	Resin mold specimen table, Ø31.75 mm
810-650-4	Resin mold specimen table, Ø38.1 mm
810-650-5	Specimen holder f. resin molded specimen, 1 specimen Ø40 mm
02ATE760	Table, QV-E/QS
810-641	Vibration Isolator, (for testing machine)

System A

HM-210A/HM-220A

Features:
- Touch-panel operation
- Measurement of indentation dimensions using a measuring microscope
- Positioning using a manual XY stage

System C

HM-210C/HM-220C

Features:
- Operated using AVPAK-20
- Automatic indentation reading
- Automatic positioning with motorized XY stage

System B

HM-210B/HM-220B
Automatic measurement by AVPAK-20 eliminates operator measurement errors.

Features:
- Operation using AVPAK-20
- Automatic measurement of indentations
- Positioning using a manual XY stage

System D

HM-210D/HM-220D
Top-end model with autofocus

Features:
- Operated using AVPAK-20
- Automatic identation reading
- Automatic positioning with motorized XY stage
- Autofocusing

Video camera unit 810-454D
(Can be used with the manual model main unit)
CCD camera and 8.4"/213,4mm TFT monitor Enables observation and measurement of indentations at high magnification, thereby reducing operator error

AVPAK-20 software for automatic hardness testing systems. Software that supports control, testing and report creation related to hardness testing. Supports parameter setting and automatic measurement.

High-functionality PC and TFT monitor
Compatible with Windows® 7/10* Professional. Supports a wide-screen TFT and provides improved operability.
*depending the version

All products to be sold to commercial customers. Product illustrations are without obligation. Product descriptions, in particular any and all technical specifications, are only binding when explicitly agreed upon. For suggested retail prices, please refer to the separate price list.

Mitutoyo

Micro-Vickers Hardness Testing Machines HM-210/220

Configuration

Up to three additional objective lenses can be added

		Minimum system configuration		In addition selectable FACTORY OPTIONS		Remarks
TOUCH SCREEN MODELS	SYSTEM A	HM-210 SYSTEM A	Main unit standard test force	810-401D	Video camera unit	810-454D	
			Manual XY stage 25 x 25mm	810-420	Objective lens 2X	11AAC104	
					Objective lens 5X	11AAC105	
		HM-210 SYSTEM A	Main unit standard test force	810-401D	Objective lens 10X	11AAC106	
			Manual XY stage 50 x 50mm	810-423	Objective lens 20X	11AAC107	
					Objective lens 100X	11AAC108	
					Indenter shaft unit	11AAC109	with 19BAA061 Knoop indenter
		HM-220 SYSTEM A	Main unit low test force	810-406D	Video camera unit	810-454D	
			Manual XY stage 25 x 25mm	810-420	Objective lens 2X	11AAC104	
					Objective lens 5X	11AAC105	
		HM-220 SYSTEM A	Main unit low test force	810-406D	Objective lens 10X	11AAC106	
			Manual XY stage 50 x 50mm	810-423	Objective lens 20X	11AAC107	
					Objective lens 100X	11AAC108	
					Indenter shaft unit	11AAC110	with 19BAA062 Knoop indenter

		Minimum system configuration		In addition selectable FACTORY OPTIONS		Remarks
SOFTWARE MODELS	SYSTEM B	HM-210 SYSTEM B	Main unit standard test force	810-404D	Objective lens 2X	11AAC104	
			Manual XY stage 25 x 25mm	810-420	Objective lens 5X	11AAC105	
			AVPAK-20*	11AAC666	Objective lens 10X	11AAC106	
					Objective lens 20X	11AAC107	
		HM-210 SYSTEM B	Main unit standard test force	810-404D	Objective lens 100X	11AAC108	
			Manual XY stage 50 x 50mm	810-423	Indenter shaft unit	11AAC109	with 19BAA061 Knoop indenter
			AVPAK-20*	11AAC666	Measuring microscope	11AAC129	
		HM-220 SYSTEM B	Main unit low test force	810-409D	Objective lens 2X	11AAC104	
			Manual XY stage 25 x 25mm	810-420	Objective lens 5X	11AAC105	
			AVPAK-20*	11AAC666	Objective lens 10X	11AAC106	
					Objective lens 20X	11AAC107	
		HM-220 SYSTEM B	Main unit low test force	810-409D	Objective lens 100X	11AAC108	
			Manual XY stage 50 x 50mm	810-423	Indenter shaft unit	11AAC110	with 19BAA062 Knoop indenter
			AVPAK-20*	11AAC666	Measuring microscope	11AAC129	

		Minimum system configuration		In addition selectable FACTORY OPTIONS		Remarks
SOFTWARE MODELS	SYSTEM C	HM-210 SYSTEM C	Main unit standard test force	810-404D	Objective lens 2X	11AAC104	
			Motorized XY stage 50 x 50mm	810-461D	Objective lens 5X	11AAC105	
			AVPAK-20*	11AAC666	Objective lens 10X	11AAC106	
					Objective lens 20X	11AAC107	
		HM-210 SYSTEM C	Main unit standard test force	810-404D	Objective lens 100X	11AAC108	
			Motorized XY stage 100 x 100mm	810-462D	Indenter shaft unit	11AAC109	with 19BAA061 Knoop indenter
			AVPAK-20*	11AAC666	Measuring microscope	11AAC129	
		HM-220 SYSTEM C	Main unit low test force	810-409D	Objective lens 2X	11AAC104	
			Motorized XY stage 50 x 50mm	810-461D	Objective lens 5X	11AAC105	
			AVPAK-20*	11AAC666	Objective lens 10X	11AAC106	
					Objective lens 20X	11AAC107	
		HM-220 SYSTEM C	Main unit low test force	810-409D	Objective lens 100X	11AAC108	
			Motorized XY stage 100 x 100mm	810-462D	Indenter shaft unit	11AAC110	with 19BAA062 Knoop indenter
			AVPAK-20*	11AAC666	Measuring microscope	11AAC129	

		Minimum system configuration		In addition selectable FACTORY OPTIONS		Remarks
SOFTWARE MODELS	SYSTEM D	HM-210 SYSTEM D	Main unit standard test force	810-404D	Objective lens 2X	11AAC104	
			Motorized XY stage 50 x 50mm	810-461D	Objective lens 5X	11AAC105	
			Auto Focus stage unit	810-465	Objective lens 10X	11AAC106	
			AVPAK-20*	11AAC666	Objective lens 20X	11AAC107	
					Objective lens 100X	11AAC108	
		HM-210 SYSTEM D	Main unit standard test force	810-404D	Indenter shaft unit	11AAC109	with 19BAA061 Knoop indenter
			Motorized XY stage 100 x 100mm	810-462D	Measuring microscope	11AAC129	
			Auto Focus stage unit	810-465			
			AVPAK-20*	11AAC666			
		HM-220 SYSTEM D	Main unit low test force	810-409D	Objective lens 2X	11AAC104	
			Motorized XY stage 50 x 50mm	810-461D	Objective lens 5X	11AAC105	
			Auto Focus stage unit	810-465	Objective lens 10X	11AAC106	
			AVPAK-20*	11AAC666	Objective lens 20X	11AAC107	
					Objective lens 100X	11AAC108	
		HM-220 SYSTEM D	Main unit low test force	810-409D	Indenter shaft unit	11AAC110	with 19BAA062 Knoop indenter
			Motorized XY stage 100 x 100mm	810-462D	Measuring microscope	11AAC129	
			Auto Focus stage unit	810-465			
			AVPAK-20*	11AAC666			

* The above set does not include PC.

For all systems: 50 x objective as standard.

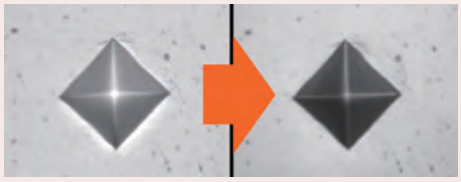

Observation image of the indentation (50X)
Stray light reduction around the indentation

Wide range of lenses available for different magnifications

Objectives	Vickers-Scale		
	HV 0,00005 - 0,02	HV 0,2 - 1	HV 1-2
2x	Use this objectives only for probe overview		
5x	Use this objectives only for probe overview		
10x			
20x			
50x			
100x			
10x objective for easy focus			
Use this table for first orientation			

All products to be sold to commercial customers. Product illustrations are without obligation. Product descriptions, in particular any and all technical specifications, are only binding when explicitly agreed upon. For suggested retail prices, please refer to the separate price list.

Vickers Hardness Testing Machine HV-110/120

Series 810

HV 110/120 has the following benefits:

- Line-up from manual operation to CNC
- **144 mm** (5,7 inch) colored touchsreen display (Type A) with higher visibility, easy to operate user interface
- Configuring a fully automatic system dramatically shortens the total cycle time for hardness testing using AVPAK-20 (Type B, C, D) for batch control of the testing, analysis and report creation process
- Integrated features of motorized type successfully reduce the total testing tact time
- Electromagnetic test force control for all models
- LED illumination employment extends the service life and offers a natural-colored observation image
- Supports Micro Brinell up to 62,5KG with an optional test force weight.

Manual type A **Software type D**

HV-110

Model	HV-110	HV-110,
No.	**810-440D**	**810-443D**
Test force	N: 9807; 19,61; 29,42; 49,03; 98,07; 196,1; 294,2; 490,3 (kgf): 1; 2; 3; 5; 10; 20; 30; 50	N: 9807; 19,61; 29,42; 49,03; 98,07; 196,1; 294,2; 490,3 (kgf): 1; 2; 3; 5; 10; 20; 30; 50
System	System A	System A

HV-120

Model	HV-120	HV-120.
No.	**810-445D**	**810-448D**
Test force	N: 2942; 4903; 9807; 24,51; 49,03; 98,07; 196,1; 294,2 (kgf): 0,3; 0,5; 1; 2,5; 5; 10; 20; 30	N: 2942; 4903; 9807; 24,51; 49,03; 98,07; 196,1; 294,2 (kgf): 0,3; 0,5; 1; 2,5; 5; 10; 20; 30
System	System B / C / D	System B / C / D

Scan QR Code with your mobile device and watch our product videos on YouTube

Specifications

External dimensions [mm]	System A: 307(W)×696(D)×786(H)mm System B/C/D: 307(W)×627(D)×875(H)mm
Objective lens	Up to 3 pcs. mountable (one standard lens 10X mounted as standard)
Force dwell time	5-999 sec (selectable)
Optical system	Infinity corrected optical system
Standard	JIS B 7725, ISO 6507-2
Illumination unit	LED light
Data output	RS-232C, Digimatic, USB 2. 0 interface
Indenter approach speed	60 µm/s, 150 µm/s selectable
Control panel	Built-in touch panel, 5,7" Color LCD (HM-110A/120A for System A), Control software (PC for System B/C/D)
Functions	Calculation of Vickers / Knoop*2 / Brinell*3 hardness, and ceramic fracture toughness based on IF method (JIS R1697), 3 display format (standard, list, simple), GO/NG judgment, test condition guide, curve and user correction, hardness corresponding value, statistics calculation
Main unit mass	HV-110: Approx. 60kg, HV-120: Approx. 58kg
Output	Digimatic, serial, USB2 series A (for memory)*1, USB2 B Type (for system communication)
Resolution of diagonal length of an indentation	Objective lens less than 50X: 0,1µm (Objective lens more than 50X: 0,01µm)
Specimen dimensions	System A: height 210mm, depth 170mm (when using flat anvil) System B: height 181mm, depth 170mm (when using manual XY stage 50X50mm) System C: height 172mm, depth 170mm, System D: height 132mm, depth 170mm
Test force control	Lever method and automatic control (load, duration, unload)
Turret drive	Motor driven and manual operation

Hardness Testing Machines brochure on request

All products to be sold to commercial customers. Product illustrations are without obligation. Product descriptions, in particular any and all technical specifications, are only binding when explicitly agreed upon. For suggested retail prices, please refer to the separate price list.

Vickers Hardness Testing Machine HV-110/120

Manual or complete automatic testing

System A

HV-110A/HV-120A

Features:
- 144 mm (5.7 inch) color LCD display
- 3 types of display styles settable
- Equipped measuring microscope allows diagonal length measurement by visual observation
- Positioning using a manual XY stage

System C

HV-110C/HV-120C

Features:
- Operation using highly functional AVPAK-20 software
- Light intensity of the LED illumination adjusted with aperture diaphragm or through AVPAK-20
- Automatic indentation reading
- Automatic positioning using motorized XY stage

System B

HV-110B/HV-120B

Features:
- Operation using highly functional AVPAK-20 software
- Light intensity of LED illumination adjusted with aperture or AVPAK-20
- Positioning using a manual XY stage

System D

HV-110D/HV-120D

Features:
- Operation using highly functional AVPAK-20 software
- Light intensity of the LED illumination adjusted with aperture diaphragm or through AVPAK-20
- Automatic positioning with motorized XY stage
- Auto focussing

Optional accessories

No.	Description
19BAA063MPA	Knoop diamond indenter ISO 4545 cert., V100 HK0.2 HV-100, AVK Series
63ETB775	Reference material Vickers ISO 6507-3, 750 HV1
63ETB749	Reference material Vickers ISO 6507-3, 500 HV10
63ETB754	Reference material Vickers ISO 6507-3, 750 HV10
63ETB875	Reference material Vickers ISO 6507-3, 500 HV20
63ETB880	Reference material Vickers ISO 6507-3, 750 HV20
63ETB897	Reference material Vickers ISO 6507-3, 500 HV30
63ETB902	Reference material Vickers ISO 6507-3, 750 HV30
810-038	Round table, Ø250 mm
810-040	V-anvil, groove length 40 mm, Ø15 mm-Ø60 mm
810-041	V-anvil, groove length 40 mm, Ø3 mm-Ø9 mm
810-423	Manual XY stage w. digital micrometers, 50x50mm HM-200 and HV-100 Series
11AAC702	Vickers hardness testing machines, Steel stand for HV-100 Series machine
11AAC719	Vickers hardness testing machines, Vibration isolator stand HV-100 Series
810-644	Adittional rack for 11AAC719

Manual type with 810-454D video system

All products to be sold to commercial customers. Product illustrations are without obligation. Product descriptions, in particular any and all technical specifications, are only binding when explicitly agreed upon. For suggested retail prices, please refer to the separate price list.

Vickers Hardness Testing Machine HV-110/120

Configuration

Two additional objective lenses can be selected

		Minimum system configuration			In addition selectable FACTORY OPTIONS		Remarks
TOUCH SCREEN MODELS	SYSTEM A	HV-110 SYSTEM A	Main unit standard test force	810-440D	Video camera unit	810-454D	
			Manual XY stage 50 x 50mm	810-423	Objective lens 2X	11AAC712	
					Objective lens 5X	11AAC713	
					Objective lens 20X	11AAC714	
					Objective lens 50X	11AAC715	
		HV-120 SYSTEM A	Main unit low test force	810-445D	Video camera unit	810-454D	
			Manual XY stage 50X50 mm	810-423	Objective lens 2X	11AAC712	
					Objective lens 5X	11AAC713	
					Objective lens 20X	11AAC714	
					Objective lens 50X	11AAC715	

		Minimum system configuration			In addition selectable FACTORY OPTIONS		Remarks
SOFTWARE MODELS	SYSTEM B	HV-110 SYSTEM B	Main unit standard test force	810-443D	Measuring microscope	11AAC718	Cannot be used simultaneously with the vision unit
			Manual XY stage 50 x 50mm	810-423	Objective lens 2X	11AAC712	
			AVPAK-20*	11AAC666	Objective lens 5X	11AAC713	
					Objective lens 20X	11AAC714	
					Objective lens 50X	11AAC715	
		HV-120 SYSTEM B	Main unit low test force	810-448D	Measuring microscope	11AAC718	Cannot be used simultaneously with the vision unit
			Manual XY stage 50 x 50mm	810-423	Objective lens 2X	11AAC712	
			AVPAK-20*	11AAC666	Objective lens 5X	11AAC713	
					Objective lens 20X	11AAC714	
					Objective lens 50X	11AAC715	

		Minimum system configuration			In addition selectable FACTORY OPTIONS		Remarks
SOFTWARE MODELS	SYSTEM C	HV-110 SYSTEM C	Main unit standard test force	810-443D	Measuring microscope	11AAC718	Cannot be used simultaneously with the vision unit
			Motorized XY stage 50 x 50mm	810-451	Objective lens 2X	11AAC712	
			AVPAK-20*	11AAC666	Objective lens 5X	11AAC713	
					Objective lens 20X	11AAC714	
					Objective lens 50X	11AAC715	
		HV-110 SYSTEM C	Main unit standard test force	810-433D			
			Motorized XY stage 100 x 100mm	810-452D			
			AVPAK-20*	11AAC666			
		HV-120 SYSTEM C	Main unit low test force	810-448D	Measuring microscope	11AAC718	Cannot be used simultaneously with the vision unit
			Motorized XY stage 50 x 50mm	810-451D	Objective lens 2X	11AAC712	
			AVPAK-20*	11AAC666	Objective lens 5X	11AAC713	
					Objective lens 20X	11AAC714	
					Objective lens 50X	11AAC715	
		HV-120 SYSTEM C	Main unit standard test force	810-433D			
			Motorized XY stage 100 x 100mm	810-452D			
			AVPAK-20*	11AAC666			

		Minimum system configuration			In addition selectable FACTORY OPTIONS		Remarks
SOFTWARE MODELS	SYSTEM D	HV-110 SYSTEM D	Main unit standard test force	810-443D	Video camera unit	810-454D	
			Motorized XY stage 50 x 50mm	810-451D	Objective lens 2X	11AAC712	
			Auto Focus stage unit	810-465	Objective lens 5X	11AAC713	
			AVPAK-20*	11AAC666	Objective lens 20X	11AAC714	
					Objective lens 50X	11AAC715	
					Objective lens 100X	11AAC716	
		HV-110 SYSTEM D	Main unit standard test force	810-443D	Measuring microscope	11AAC718	Cannot be used simultaneously with the vision unit
			Motorized XY stage 100 x 100mm	810-452D			
			Auto Focus stage unit	810-465			
			AVPAK-20*	11AAC666			
		HV-120 SYSTEM D	Main unit low test force	810-448D	Video camera unit	810-454D	
			Motorized XY stage 50 x 50mm	810-451D	Objective lens 2X	11AAC712	
			Auto Focus stage unit	810-465	Objective lens 5X	11AAC713	
			AVPAK-20*	11AAC666	Objective lens 20X	11AAC714	
					Objective lens 50X	11AAC715	
					Objective lens 100X	11AAC716	
		HV-120 SYSTEM D	Main unit low test force	810-448D	Measuring microscope	11AAC718	Cannot be used simultaneously with the vision unit
			Motorized XY stage 100 x 100mm	810-452D			
			Auto Focus stage unit	810-465			
			AVPAK-20*	11AAC666			

* The above set does not include PC.

For all systems: 10 x objective as standard.

All products to be sold to commercial customers. Product illustrations are without obligation. Product descriptions, in particular any and all technical specifications, are only binding when explicitly agreed upon. For suggested retail prices, please refer to the separate price list.

Mitutoyo

Vickers Hardness Testing Software

Software AVPAK-20 for System B,C and D No. 11AAC666

Software to control test sequence, evaluate hardness and make report
Supports Windows® 7/10*, 64 bit operating system
*depending the version.

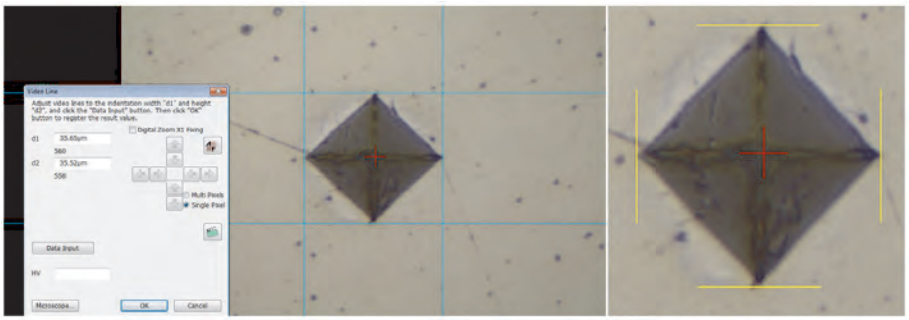

Indentation analysis function

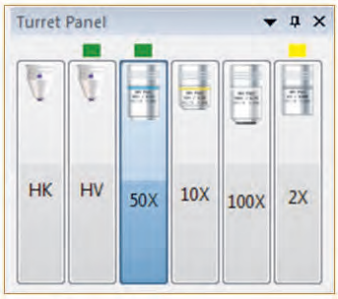

Turret control function

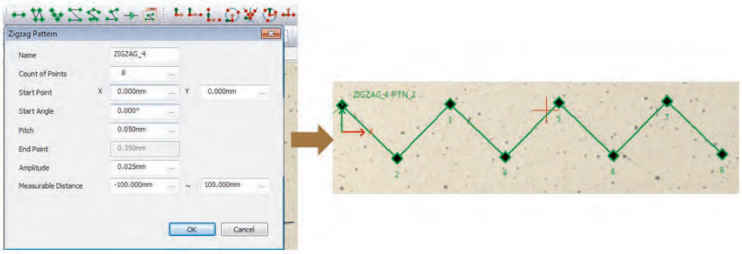

Test pattern function
Available to execute the test according to several patterns (line, zigzag, grid or circle/ arc) or its combination or generated pattern with arranged points done by the operator freely.

Coordinate alignment function
Several alignment methods (1-point, 2-points, 3-points, arc, and centre of circle, bisector, midpoint) are available.
Available to establish the coordinate along the contour for the several types of tests (offset, pattern, grid).

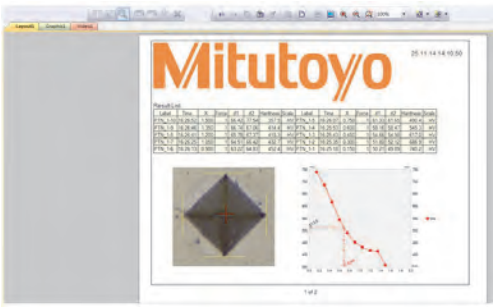

Analysis and report function
Provides to display several types of graph (carburise transition, carburize distribution, X-R control chart) and layouts.
It is possible to edit these graphs on the report.

Stitching function

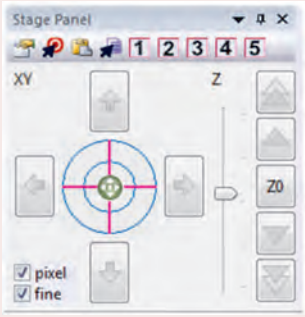

Stage control function

Functions

Stitching
Controls camera at lattice-like arranged positions and makes wide area image with several camera images (motorized XY stage is required)

Indentation analysis function
Analyse an indentation and to measure it´s diagonal length according EN ISO 6507-1

Illumination control function
Control the illumination by 100 levels. Provides to adjust the level according to the specimen automatically and to display saturation on the camera image

Stage control function
Control the motorized XY stage unit (for type C and D) and the autofocus stage unit (type D) by the joystick on the AVPAK-20 window. Also available to memorize and recall five XY positions

Turret control function
Provides to change the effective objective lenses or indenter by rotating the turret

Automatic execution function
Always records executed operations and play back this operation at anytime

All products to be sold to commercial customers. Product illustrations are without obligation. Product descriptions, in particular any and all technical specifications, are only binding when explicitly agreed upon. For suggested retail prices, please refer to the separate price list.

Vickers Hardness Testing Software

Software AVPAK-20 for System B, C and D

Graphic view (of stored images)
For displaying the entire specimen and checking the pattern positioning The digital zoom function can be used to easily magnify and check the indentation site.

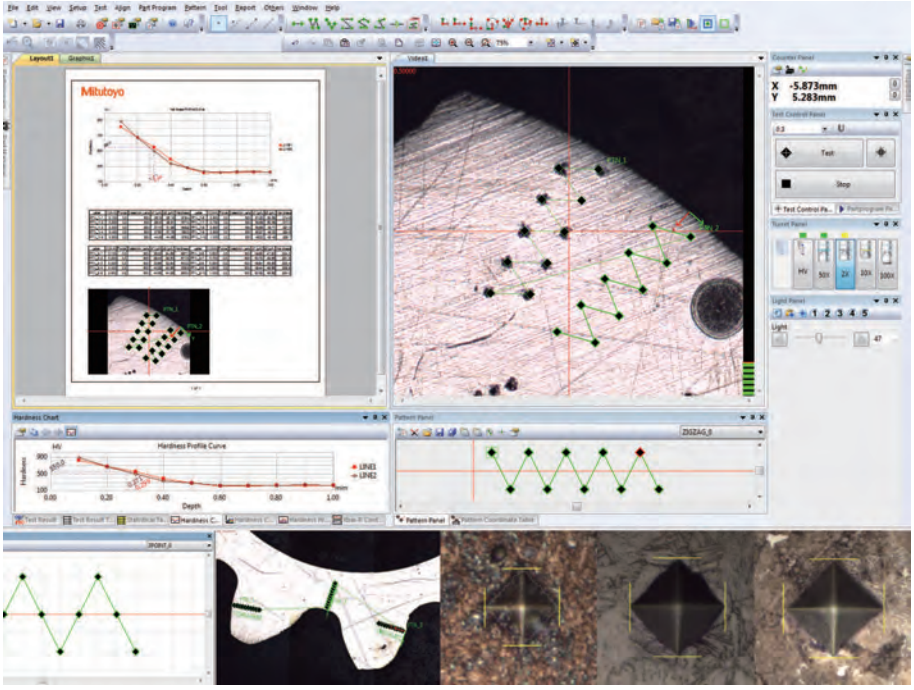

Screen layout for control, testing status and result display can be changed freely.

FUNCTIONS

Layout view
Photos from individual views, graphs, tables, etc., can be laid out freely to create the report in need.

Stitching
Takes images of an entire rectangular field from the moving stage then combines the images. Use stitching for a complete overview of sample.

Auto trace
Automatically traces the shape of the sample. Take images as the stage moves along the outer contours of the specimen, then combines the images.

Navigation function
(System B)
When the test position is to be moved during multipoint testing(CHD etc.), this function guides the travel of the XY fine adjustment manual stage to the next position by pop up on screen menu.

Handling of multiple specimens
Part program and Part Manager function support testing of multiple and irregular specimens.

Multi-specimen testing
Executes different part programs for each irregular specimen.

Parts Manager:
Executes a common part program for specimens having the same shape.

Pattern creation:
This tool supports the creation of test patterns such as straight lines, zigzag lines and teaching patterns.

Pattern pasting :
This tool supports the pasting of created test patterns by applying a coordinate system. It adjusts the origin, direction, etc. of the before created pattern.

All products to be sold to commercial customers. Product illustrations are without obligation. Product descriptions, in particular any and all technical specifications, are only binding when explicitly agreed upon. For suggested retail prices, please refer to the separate price list.

Micro-Vickers and Vickers Set

Configuration

Please order AVPAK-20 Software **11AAC666** and the PC additionally!

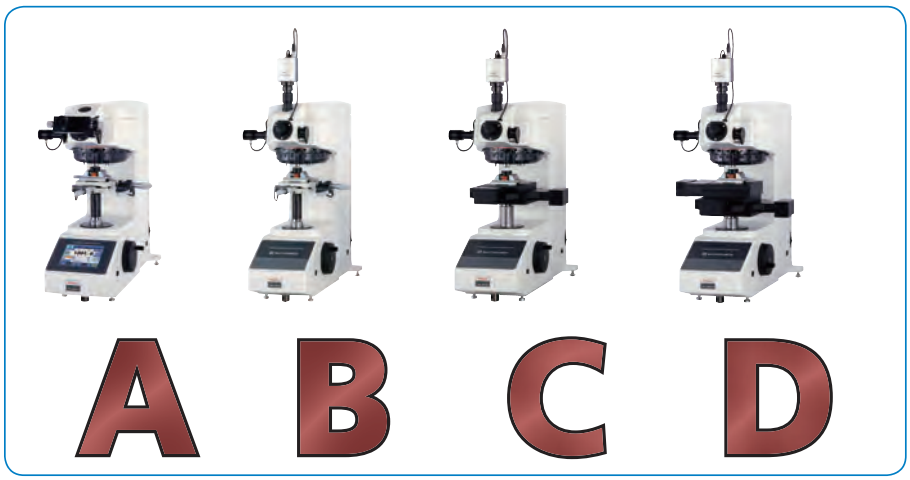

Single indenter configuration HM-200 A-Type sets

Contains:	810-401D-ASET HM-210A
810-401D	Manual main unit HM-210
11AAC106	10x Objective lens
Standard lens	50x Objective lens
810-420	Manual XY stage 25x25mm

810-016 vise not included

Contains:	810-406D-ASET HM-220A
810-406D	Manual main unit HM-220
11AAC106	10x Objective lens
11AAC108	100x Objective lens
Standard lens	50x Objective lens
810-420	Manual XY stage 25x25mm

810-016 vise not included

Single indenter configuration HM-200 B-Type sets

Contains:	810-404D-BSET1 HM-210B
810-404D	System main unit HM-210
11AAC106	10x Objective lens
Standard lens	50x Objective lens
810-420	Manual XY stage 25x25mm

810-016 vise not included

Contains:	810-409D-BSET1 HM-220B
810-409D	System main unit HM-220
11AAC106	10x Objective lens
11AAC108	100x Objective lens
Standard lens	50x Objective lens
810-420	Manual XY stage 25x25mm

810-016 vise not included

Double indenter configuration HM-200 B-Type sets

Contains:	810-404D-BSET2 HM-210B
810-404D	System main unit HM-210
11AAC109	Second indenter shaft unit for Knoop test
11AAC106	10x Objective lens
Standard lens	50x Objective lens
810-420	Manual XY stage 25x25mm

810-016 vise not included

Contains:	810-409D-BSET2 HM-220B
810-409D	System main unit HM-220
11AAC110	Second indenter shaft unit for Knoop test
11AAC106	10x Objective lens
11AAC108	100x Objective lens
Standard lens	50x Objective lens
810-420	Manual XY stage 25x25mm

810-016 vise not included

Single indenter configuration HM-200 C-Type sets

Contains:	810-404D-CSET HM-210C
810-404D	System main unit HM-210
11AAC104	2x Objective lens
11AAC106	10x Objective lens
Standard lens	50x Objective lens
810-462D	Motorized XY stage 100x100mm

810-016 vise not included

Contains:	810-409D-CSET HM-220C
810-409D	System main unit HM-220
11AAC104	2x Objective lens
11AAC106	10x Objective lens
11AAC108	100x Objective lens
Standard lens	50x Objective lens
810-462D	Motorized XY stage 100x100mm

810-016 vise not included

Single indenter configuration HM-200 D-Type sets

Contains:	810-404D-DSET HM-210D
810-404D	System main unit HM-210
11AAC104	2x Objective lens
11AAC106	10x Objective lens
Standard lens	50x Objective lens
810-462D	Motorized XY stage 100x100mm
810-465	Autofocus unit

Contains:	810-409D-DSET HM-220D
810-409D	System main unit HM-220
11AAC104	2x Objective lens
11AAC106	10x Objective lens
11AAC108	100x Objective lens
Standard lens	50x Objective lens
810-462D	Motorized XY stage 100x100mm
810-465	Autofocus unit

810-016 vise not included

All products to be sold to commercial customers. Product illustrations are without obligation. Product descriptions, in particular any and all technical specifications, are only binding when explicitly agreed upon. For suggested retail prices, please refer to the separate price list.

Micro-Vickers and Vickers Set

Please order AVPAK-20 Software **11AAC666** and the PC additionally!

Configuration

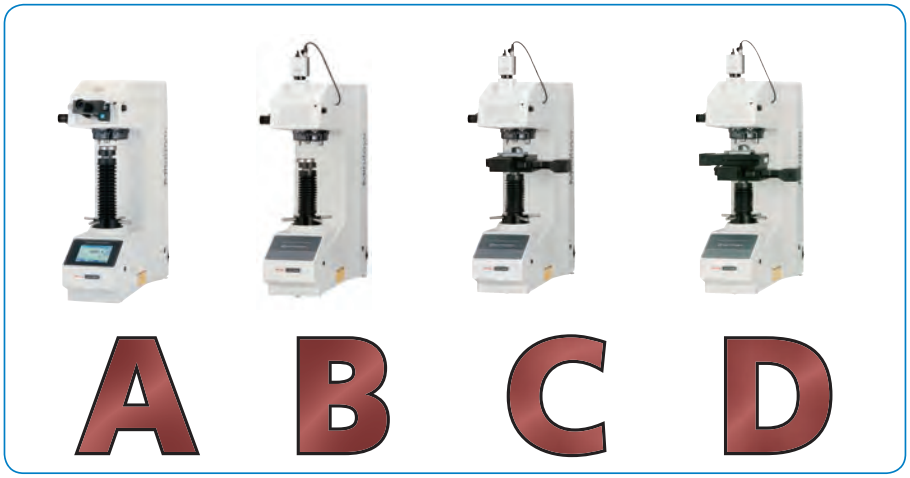

Configuration HV-100 A-Type Sets

Contains:	810-440D-ASET HV-110A
810-440D	Manual main unit HV-110
11AAC714	20x Objective lens
Standard lens	10x Objective lens

Contains:	810-445D-ASET HV-120A
810-445D	Manual main unit HV-120
11AAC714	20x Objective lens
Standard lens	10x Objective lens

Configuration HV-100 B-Type Sets

Contains:	810-443D-BSET HV-110B
810-443D	System main unit HV-110
11AAC714	20x Objective lens
Standard lens	10x Objective lens

Contains:	810-448D-BSET HV-120B
810-448D	System main unit HV-120
11AAC714	20x Objective lens
Standard lens	10x Objective lens

Configuration HV-100 C-Type Sets

Contains:	810-443D-CSET HV-110C
810-443D	System main unit HV-110
11AAC712	2x Objective lens
11AAC714	20x Objective lens
Standard lens	10x Objective lens
810-462D	Motorized XY stage 100x100mm

810-016 vise not included

Contains:	810-448D-CSET HV-120C
810-448D	System main unit HV-120
11AAC712	2x Objective lens
11AAC714	20x Objective lens
Standard lens	10x Objective lens
810-462D	Motorized XY stage 100x100mm

810-016 vise not included

Configuration HV-100 D-Type Sets

Contains:	810-443D-DSET HV-110D
810-443D	System main unit HV-110
11AAC712	2x Objective lens
11AAC714	20x Objective lens
Standard lens	10x Objective lens
810-462D	Motorized XY stage 100x100mm
810-465	Autofocus unit

810-016 vise not included

Contains:	810-448D-DSET HV-120D
810-448D	System main unit HV-120
11AAC712	2x Objective lens
11AAC714	20x Objective lens
Standard lens	10x Objective lens
810-462D	Motorized XY stage 100x100mm
810-465	Autofocus unit

810-016 vise not included

All products to be sold to commercial customers. Product illustrations are without obligation. Product descriptions, in particular any and all technical specifications, are only binding when explicitly agreed upon. For suggested retail prices, please refer to the separate price list.

Mitutoyo

Wizhard Rockwell, Rockwell Superficial, Brinell Hardness Testers HR-500 Series

Series 810

These hardness testing machines give you high performance and improved productivity.
The Wizhard Rockwell, Rockwell Superficial, Brinell Hardness Testers HR-500 Series offers you the following benefits:

- Multiple test force generation for Rockwell, Rockwell Superficial and Brinell hardness.
- A dolphin-nose indenter arm gives you easy reach of interior surfaces (min. ø40mm / ø22mm, when using an optional diamond indenter) and exterior surfaces.
- Real-time electronic test force control gives you accurate loading, and completely eliminates load force overshoot.
- An indenter escape function allows you carry out continuous testing at a fixed table position, which eliminates instability caused by table retraction.
- Auto-stop table elevation and automatic preloading provide stable test force generation.
- EXPAK software for simple data collection and statistics 11AAC237
- HR-500L long type with an optional max. specimen height of 395 mm

HR-521 / HR-522

HR-523

Conversion function [HV, HK, HR (Rockwell hardness A, B, C, D, F, G / Rockwell Superficial 15T, 30T, 45T, 15N, 30N, 45N), HS, HB, Tensile strength]
OK/NG judgment function
Continuous measurement function (for specimens of the same thickness)
Cylindrical correction, spherical correction, offset correction, multi-point correction functions
Statistical calculation function
Graph generation function (X-R control charts)

Model	HR-521	HR-521.	HR-522	HR-522.	HR-523	HR-523.
No.	**810-202D**	**810-205D**	**810-203D**	**810-206D**	**810-204D**	**810-207D**
Max. specimen height	250 mm	395 mm	250 mm	395 mm	250 mm	395 mm
Table lifting	Manual (with automatic brake)	Manual (with automatic brake)	Manual (with automatic brake)	Manual (with automatic brake)	Power drive	Power drive
Brinell Scale [N]	1839	1839	61.29 ; 98.07 ; 153.2 ; 245.2 ; 294.2 ; 306.5 ; 612.9 ; 980.7 ; 1226 ; 1839	61.29 ; 98.07 ; 153.2 ; 245.2 ; 294.2 ; 306.5 ; 612.9 ; 980.7 ; 1226 ; 1839	61.29 ; 98.07 ; 153.2 ; 245.2 ; 294.2 ; 306.5 ; 612.9 ; 980.7 ; 1226 ; 1839	61.29 ; 98.07 ; 153.2 ; 245.2 ; 294.2 ; 306.5 ; 612.9 ; 980.7 ; 1226 ; 1839

Specifications

Standard	JIS B 7726 / ISO6508-2 /ASTM E18)
Preleminary test force	26,42 : 98,07 N
Operation Unit	Touch-screen type
Load control	Automatic (load, dwell, unload)
Force dwell time	0-120 s (1 s increments)
Max. specimen depth	150 mm (from the center of the indenter shaft to back)
Data output	RS-232C, Digimatic code (SPC) and Centronics
Dimensions (WxDxH)	**Main unit** 250 x 670 x 605 mm **Control unit** 165 x 260 x 105 mm
Rockwell [N]	588,4; 980,7; 1471
Total test force Superficial [N]	147,1; 294,2; 441,3
Mass	65 kg

All products to be sold to commercial customers. Product illustrations are without obligation. Product descriptions, in particular any and all technical specifications, are only binding when explicitly agreed upon. For suggested retail prices, please refer to the separate price list.

Wizhard Rockwell, Rockwell Superficial, Brinell Hardness Testers HR-500 Series

Series 810

Additional product description and accessories for HR-500 series

Standard accessories

No.	Description
810-039	Flat anvil, Ø64 mm
810-040	V-anvil, groove length 40 mm, Ø15 mm-Ø60 mm
19BAA517	Hardness testing machines, Vinyl Cover HR-500 Series

Hardness test blocks, Diamond indenter, steel balls and split level are standard accessories.

Optional accessories

No.	Description
264-504-5D	Statistic Processing Printer DP-1VR, CEE Type
11AAC237	EXPAK-07 data processing program, HR-500 Series
Anvils	
810-037	Round table, Ø180 mm
810-038	Round table, Ø250 mm
810-041	V-anvil, groove length 40 mm, Ø3 mm-Ø9 mm
810-042	Stepped V-anvil, step height 13 mm, groove length 10 mm, Ø4mm- Ø16 mm
810-029	V-anvil, groove length 400 mm, Ø50 mm- Ø100 mm
810-030	Diamond spot anvil, for Rockwell Superficial scales Ø3.5 mm
810-043	Spot Anvil, Spot Ø12 mm
810-044	Stepped spot Anvil, Spot Ø5.5 mm, step height 13 mm
Indenter	
19BAA292MPA	Rockwell diamond indenter ISO 6508 cert., Short type for HR-500 Series
19BAA072MPA	Rockwell diamond indenter ISO 6508 cert., LR100 standard type
Portable microscopes for Brinell testing	
19BAA161D	Portable Microscope, 20x for Brinell measurement
19BAA318D	Portable Microscope, 40x for Brinell measurement
19BAA319D	Portable Microscope, 100x for Brinell measurement

Additional accessories are available for Brinell hardness testing. Refer to the Hardness Testing Machines brochure.
For identers and Hardness test blocks see chapter Hardness Test Blocks

The dolphin-nose indenter arm for inside testing

Hardness Testing Machines brochure on request

Control units

Touch-screen type
- **Touch-screen operation with a back-lit LCD graphic display.**
- **Remote selection of the test force linked to the hardness scale selection.**
- **Choice of message language in English, German, French, Spanish, Italian and Japanese for user-friendly operation.**
- **Cylindrical and spherical surface compensation.**
- **Data offset**
- **Conversion to other hardness scales.**
- **Powerful statistical processing with flexible data point editing and 1024 data memory.**
- **Measurement data editing**
- **OK/±NG tolerance judgement.**
- **Statistical processing, histogram and X-R chart**
- **Expak software for simple data collection 11AAC237**

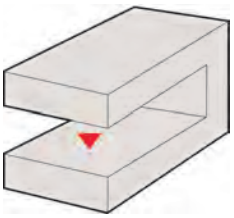

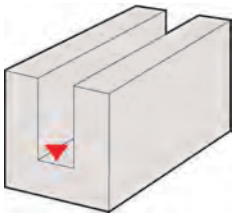

Various shapes of specimen can be tested (a dolphin nose type indenter mechanism has been adopted). The dolphin-nose indenter mechanism allows internal measurement of pipe samples as well as the top surface of a flat sample.

All products to be sold to commercial customers. Product illustrations are without obligation. Product descriptions, in particular any and all technical specifications, are only binding when explicitly agreed upon. For suggested retail prices, please refer to the separate price list.

Rockwell HR-100/200/300/400

Series 963

These are five economical Rockwell hardness testing machines to suit practically every application you need.
The Rockwell HR-100/200/300/400 offers you the following benefits:

- The newly designed frame provides maximum clearance for positioning the work piece, all you need is a flat table for mounting these testing machines.
- They are very simple to operate: the analogue types HR-110/HR-210 use an automatic presetting dial gauge.
- HR-110MR does not require a power source, and is considered to be environmentally friendly.
- Digital models HR-430MR/MS use automatic steering wheel braking and load sequencing for easy handling.
- Digital models HR-320MS and HR-430MR/MS can use our Digimatic Mini-processor (DP-1VR) for printing results, and you can use an input tool (USB-ITN-E) to connect to a PC for data transfer, analysis and storage.
- You can perform Brinell hardness tests by using the following optional accessories: a Brinell indenter, a weight set and a measurement microscope.

HR-110MR
Rockwell hardness testing machine

An environmentally friendly energy-saving model.
The basic operation is all manual, including weight-changing (total test force selection).

HR-210MR
Rockwell hardness testing machine

Manual weight changing (with total test force selected) and handling of preload force. Motor drive controls loading sequence.

HR-110MR and HR-210MR gauge

Model	HR-110MR	HR-210MR	HR-320MS	HR-430MR	HR-430MS
No.	**963-210-20**	**963-220D**	**963-231D**	**963-240D**	**963-241D**
Standard	JIS B 7726	JIS B 7726	JIS B 7726 / ISO6508-2 (ASTM E18)	JIS B 7726 / ISO6508-2 (ASTM E18)	JIS B 7726 / ISO6508-2 (ASTM E18)
Preliminary test force (N)	98,07	98,07	29,42; 98,07	98,07	29,42; 98,07
Test force Superficial (N)	-	-	147,1; 294,2; 441,3	-	147,1; 294,2; 441,3
Test force Rockwell (N)	588,4; 980,7; 1471	588,4; 980,7; 1471	588,4; 980,7; 1471	588,4; 980,7; 1471	588,4; 980,7; 1471
Display	Analog	Analog	Digital	Digital	Digital
Preliminary test force setting	-	-	-	Dial switching	Dial switching
Resolution	0,5 HR graduation	0,5 HR graduation	0,1 HR indication	0,1 HR indication	0,1 HR indication
Test force selection	Weight exchange	Weight exchange	Weight exchange	Dial switching	Dial switching
Test force application	Manual	Semi-automatic	Semi-Automatic	Automatic	Automatic
Test force duration	Manual	Fixed 3-5-5 sec. or manual	Fixed 3-5-5 sec. or manual	1-99 sec or manual	1-99 sec or manual
Data output	-	-	Digimatic (SPC), RS-232C	Digimatic (SPC), RS-232C	Digimatic (SPC), RS-232C

Specifications

Height	Max. 180 mm (100 if cover is attached) mm
Measuring depth	Max. 165 mm (from the center of the endenter axis)
Functions	HR-320MS, HR-430MR, HR-430MS : GO/NG, Compensation fubction, Hardness conversion

Optional accessories

No.	Description
56AAK286B	Brinell weight set, HR-110MR HR-210MR 3pcs.
56AAK287B	Brinell weight set, HR-320MS 4pcs.
56AAK288B	Brinell weight set, HR-430MR 3pcs.
56AAK289B	Brinell weight set, HR-430MS 4pcs.
810-037	Round table, Ø180 mm
810-038	Round table, Ø250 mm
19BAA161D	Portable Microscope, 20x for Brinell measurement
Anvils	
810-030	Diamond spot anvil, for Rockwell Superficial scales Ø3.5 mm
810-027	Hardness testing machines, Adjustable support for long workpieces
810-029	V-anvil, groove length 400 mm, Ø50 mm- Ø100 mm
810-026	Fine feed adjustment stage, for Jominy test(end quench test)specimen
810-028	Hardness testing machines, Height adjustable jack rest
810-040	V-anvil, groove length 40 mm, Ø15 mm- Ø60 mm
810-043	Spot Anvil, Spot Ø12 mm
810-041	V-anvil, groove length 40 mm, Ø3 mm- Ø9 mm
810-044	Stepped spot Anvil, Spot Ø5.5 mm, step height 13 mm
810-042	Stepped V-anvil, step height 13 mm, groove length 10 mm, Ø4mm- Ø16 mm
810-048	Steel table, for Rockwell hardness testing machines
Computer accessories (not HR-110, HR-210)	
264-504-5D	Statistic Processing Printer DP-1VR, CEE Type
06ADV380E	USB Input Tool Direct (Digimatic USB) cable, 2m, Round 6-Pin Type
937387	Digimatic Cable, Round 6-Pin Type, 1 m
965013	Digimatic Cable, Round 6 -Pin Type, 2m

For identers and Hardness test blocks see chapter Hardness Test Blocks

Scan QR Code with your mobile device and watch our product videos on YouTube

All products to be sold to commercial customers. Product illustrations are without obligation. Product descriptions, in particular any and all technical specifications, are only binding when explicitly agreed upon. For suggested retail prices, please refer to the separate price list.

Rockwell HR-100/200/300/400

Optional accessories
For identers and Hardness test blocks see chapter Hardness Test Blocks

Series 963

Additional product description for HR-100/200/300/400 Series

HR-320MS

Dual type (Rockwell / Rockwell Superficial) hardness testing machine:

Manually handles test force and preload force selection.
Motor drive controls loading sequence.

HR-430MR

Rockwell hardness testing machine:

Economy type, but supports dial switching, power steering and support of all test standards and is equipped with automatic brake handle auto start feature.
Motor drive controls loading sequence.

HR-430MS

Dual type (Rockwell / Rockwell Superficial) hardness testing machine:

Economy type, but supports dial switching, power steering and support of all test standards and is equipped with automatic brake handle auto start feature.
Motor drive controls loading sequence.

Features preload force selection

Automatic steering wheel brake

SPC Digimatic and RS-232C interface

All products to be sold to commercial customers. Product illustrations are without obligation. Product descriptions, in particular any and all technical specifications, are only binding when explicitly agreed upon. For suggested retail prices, please refer to the separate price list.

Rockwell HR-100/200/300/400

Series 963

Additional product description and accessories for HR-100/200/300/400 Series

810-038
Round table OD Ø250 mm

For large probes
like profiles

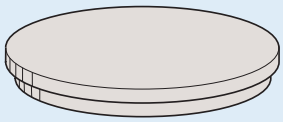

810-037
Round table OD Ø180 mm

For large probes
like profiles

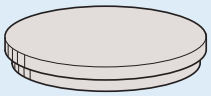

810-040
V-anvil (large)
(OD Ø40 mm, groove width 30 mm)
For shaft material (max Ø60 mm)

810-043
Spot anvil

(OD Ø12 mm)

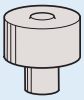

810-041
V-anvil (small)
(OD Ø 40 mm, groove width 6 mm)
For shaft material (max. Ø8.4 mm)

810-044
Spot anvil
(OD Ø5.5 mm)
For plate material

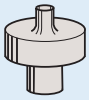

810-027
Variable rest

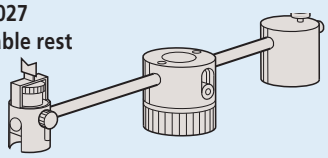

Test of long object probes (used together with anvil)

810-029
Special V-anvil (Length 400 mm, groove width 50 mm)

For shaft material
(max. Ø100 mm)

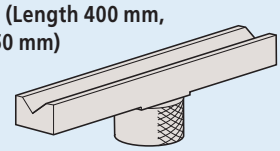

810-026
Micromovement table for Jominy test

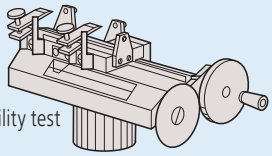

JIS G 0561
Steel hardenability test

810-030
Diamond spot anvil
(OD Ø10 mm)
For plate material
Exclusive use for Rockwell superficial hardness test

810-042
Small V-anvil
(OD Ø10 mm)
For shaft material (max. Ø16 mm)

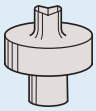

810-028
Jack rest

Testing of long object probes
(used together with anvil
or round table)

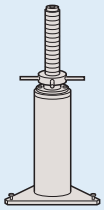

810-048
Mount for testing machine

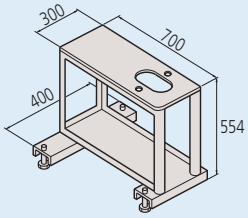

264-504-5
Digimatic miniprocessor DP-1VR
Connecting cable not included (sold separately), please order separately. Connecting cable (1 m), part No. 937387

06ADV380E
USB input tool
Direct USB-ITN

Easy data input to PC

All products to be sold to commercial customers. Product illustrations are without obligation. Product descriptions, in particular any and all technical specifications, are only binding when explicitly agreed upon. For suggested retail prices, please refer to the separate price list.

Impact Type Hardness Testing Unit HARDMATIC HH-411

Series 810

This is a lightweight, digital-reading portable hardness testing instrument for metal workpieces. The Hardmatic HH-411 offers you the following benefits:

- It operates on the rebound hardness principle (standardised according to ASTM A 956).
- Measurement is conducted with hardness value L (Leeb-value) but you can convert to any desired hardness scale.
- The display automatically shows GO/±NO GO with the tolerance function set and selected.
- It has a memory function for 1800 measured values, and automatic measuring direction angle-compensation.
- Expak software gives you simple data collection 11AAC238

810-298

Sample application

Specifications

Impact device	Impact hammer with integrated carbide-ball tip, D scale (ASTM A 956)
Functions	Auto angle compensation, Offset, OK/NG judgement, Hardness scale conversion, Data storage (1800 data entries), Statistical analysis (Average value, Max. value, Min. value, Dispersion), Auto sleep function, Impact counter display function
Power supply	Battery LR6 (2 pcs.) or AC adapter (optional)
Data output	RS-232C, SPC

Standard accessories

No.	Description
19BAA457	Replacement carbide ball, HH-411
19BAA460	Detector Cable f. UD-41X
19BAA258	Cleaning brush, HH-411
19BAA265	Reference material, 800HLD HH-411

Optional accessories

No.	Description
19BAA458	Impact hammer, DL impact device
06AEG302D	AC-Adapter, 9V 500mA, CEE Type
11AAC238	EXPAK-08 data processing program, HH-411
Computer accessories	
937387	Digimatic Cable, Round 6-Pin Type, 1 m
19BAA263	Reference material Vickers ISO 6507
264-504-5D	Statistic Processing Printer DP-1VR, CEE Type
Indenters	
810-288	Leeb impact device, HLDC impact device UD-412
810-289	Leeb impact device, HLD+15 impact device UD-413
810-290	Leeb impact device, HLDL impact device UD-414
Reference material (all blocks are 115 mm diameter, 33 mm thick, 3.7 kg mass)	
19BAA243	Reference material, 880HLD HH-411
19BAA244	Reference material, 830HLD HH-411
19BAA245	Reference material, 730HLD HH-411
Support rings for D/DC type impact devices	
19BAA248	Support ring cylindrical specimen, R10-20 HH-411
19BAA249	Support ring hollow cylindrical specim., R14-20 HH-411
19BAA250	Support ring spherical specimen, R10-27.5 HH-411
19BAA251	Support ring hollow spherical specim., R13.5-20 HH-411 (D/DC impact devices)

Model	HH-411
No.	**810-298**
Accuracy	±12 HL (800 HL +/- 1,5%)
Display unit	7-segment LCD
Hardness Display range	Leeb hardness: 1 to 999HL
	Conversion range / Increment
Vickers	43-950HV / 1 HV
Brinell	20-894 HB / 1 HB
Rockwell C	19,3-68,2 HRC / 0,1 HRC
Rockwell B	13,5-101,7 HRB / 0,1 HRB
Shore	13,2-99,3 HS / 0,1 HS
Tensile strength	499-1996 MPa / 1 MPa
Specimen Thickness	Min. 5 mm
Specimen Mass	5 kg or more
Dimensions	
Measuring/Display unit	ø28 x 175 mm / 70 x 110 x 35 mm
Specimen requirements	Min. specimen thickness of 5mm or more and mass of 5kg or more (However, a specimen of mass of 0.1 to 5kg is measurable by securing to a massive base) Testing point: 5mm or more from edge of specimen, 3mm or more between testing points Specimen surface roughness: Ra of 2µm or less
Resolution	1-999 HL
Mass	320 g

UD-412 Impact device
HLDC scale
Use for inner walls of cylinders. The grip is short to allow positioning within a cylinder.

UD-413 Impact device
HLD+15 scale
Use for concave workpieces such as gear teeth, ball bearings, etc.

UD-414 impact device
HLDL scale
Use for gear teeth, welded corners, etc.

All products to be sold to commercial customers. Product illustrations are without obligation. Product descriptions, in particular any and all technical specifications, are only binding when explicitly agreed upon. For suggested retail prices, please refer to the separate price list.

Digital and Analogue Durometers
HARDMATIC HH-300

Series 811

These compact digital/dial durometers can test a range of different materials and offer you the following benefits:

- You can use them for testing the hardness of the materials including natural rubber, neoprene, polyesters, PVC, leather, Thiokol, nitrite rubber, wax, vinyl, cellulose acetates, glass polystyrene, etc.
- Shore hardness „A“, „D“ and „E“.

HH-329; HH-331; HH-333; HH-335

Model	HH-329	HH-331	HH-333	HH-335
No.	**811-329-10**	**811-331-10**	**811-333-10**	**811-335-10**
Display	Analog Dial	Analog Dial	Analog Dial	Analog Dial
Shore Scale	Shore E	Shore A	Shore D	Shore A
Indenter b	ø 5 mm	ø 1,25 mm	ø 1,25 mm	ø 1,25 mm
Indenter d	-	ø 0,79 mm	-	ø 0,79 mm
Indenter r	Ø 2,5	-	R 0,1 mm	-
θ	-	35°	30°	35°
Pressure foot a	ø 5,4 mm	ø3mm	ø 3 mm	ø 3 mm
Pressure foot f	44 x18 mm	ø 18 mm	ø 18 mm	44 x 18 mm
Indenter protrusion	2,5 mm	2,5 mm	2,5 mm	2,5 mm
Spring force WE, WA, WD	WE=550+75 HE [mN]	WA=550+75HA [mN]	WD=444,5HD [mN]	WA=550+75HA [mN]
Dimensions (WxDxH)	146 x 68 x 34 mm	188 x 68 x 35 mm	188 x 68 x 35 mm	146 x 68 x 34 mm
Mass	0,3 kg	0,32 kg	0,32 kg	0,3 kg

HH-337; HH-335-01; HH-337-01

Model	HH-337	HH-335-01	HH-337-01
No.	**811-337-10**	**811-335-11**	**811-337-11**
Display	Analog Dial	Analog Dial	Analog Dial
Shore Scale	Shore D	Shore A	Shore D
Indenter b	ø 1,25 mm	ø 1,25 mm	ø 1,25 mm
Indenter d	-	ø 0,79 mm	-
Indenter r	R 0,1 mm	-	R 0,1 mm
θ	30°	30°	30°
Pressure foot a	ø 3 mm	ø 3 mm	ø 3 mm
Pressure foot f	44 x 18 mm	ø 18 mm	ø 18 mm
Indenter protrusion	2,5 mm	2,5 mm	2,5 mm
Spring force WE, WA, WD	WS=444,5HD [mN]	WA=550+75HA [mN]	WD=444,5HD [mN]
Dimensions (WxDxH)	146 x 68 x 34 mm	146 x 68 x 34 mm	146 x 68 x 34 mm
Mass	0,3 kg	0,27 kg	0,27 kg

811-335-11

811-333-10

Images show rectangular and round pressure foot models. Please refer to pressure foot f dimensions in the table for the choice of correct pressure foot.

For the choice of long or short type, refer to the dimensions column (WxDxH) in the table

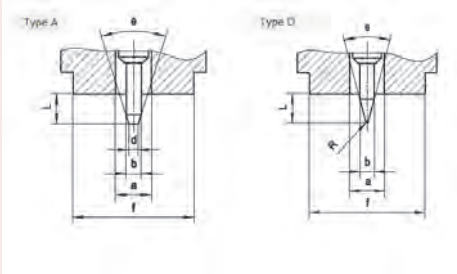

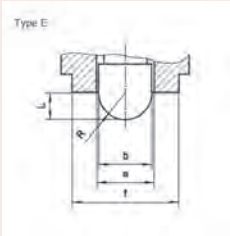

Diagrama da geometria do indentador

64AAA964

All products to be sold to commercial customers. Product illustrations are without obligation. Product descriptions, in particular any and all technical specifications, are only binding when explicitly agreed upon. For suggested retail prices, please refer to the separate price list.

Digital and Analogue Durometers
HARDMATIC HH-300

Series 811

HH-330, HH-332, HH-334; HH-336, HH-338

Model	HH-330	HH-332	HH-334	HH-336	HH-338
No.	**811-330-10**	**811-332-10**	**811-334-10**	**811-336-10**	**811-338-10**
Display	Digital	Digital	Digital	Digital	Digital
Shore Scale	Shore E	Shore A	Shore D	Shore A	Shore D
Indenter b	ø 5 mm	ø 1,25 mm	ø 1,25 mm	ø 1,25 mm	ø 1,25 mm
Indenter d	-	ø 0,79 mm	-	ø ,079 mm	-
Indenter r	Ø 2,5 mm	-	R 0,1 mm	-	R 0,1 mm
θ	-	35°	30°	35°	30°
Pressure foot a	ø 5,4 mm	ø 3 mm	ø 3 mm	ø 3 mm	ø 3 mm
Pressure foot f	44x18 mm	ø 18 mm	ø 18 mm	44x18 mm	44x18 mm
Indenter protrusion	2,5 mm	2,5 mm	2,5 mm	2,5 mm	2,5 mm
Spring force WE, WA, WD	WE=550+75HE [mN]	WA=550+75HA [mN]	WD=444,5HD [mN]	WA=550+75 HA [mN]	WD=444,5HD [mN]
Dimensions (WxDxH)	147 x 59 x 40	193 x 60 x 29,5	193 x 60 x 29,5	151 x 60 x 28,5	151 x 60 x 28,5
Mass	0,29 kg	0,31 kg	0,31 kg	0,29 kg	0,29 kg

HH-336-01, HH-338-01

Model	HH-336-01	HH-338-01
No.	**811-336-11**	**811-338-11**
Display	Digital	Digital
Shore Scale	Shore A	Shore D
Indenter b	ø 1,25 mm	ø 1,25 mm
Indenter d	ø 0,79 mm	-
Indenter r	-	R 0,1 mm
θ	35°	30°
Pressure foot a	ø 3 mm	ø 3 mm
Pressure foot f	ø 18 mm	ø 18 mm
Indenter protrusion	2,5 mm	2,5 mm
Spring force WE, WA, WD	WA=550+75HA [mN]	WS=444,5HD [mN]
Dimensions (WxDxH)	151 x 60 x 28,5	151 x 60 x 28,5
Mass	0,26 kg	0,26 kg

811-336-11

811-332-10

Optional accessories

No.	Description
Computer accessories	
264-504-5D	Statistic Processing Printer DP-1VR, CEE Type
905338	Digimatic Cable, Flat Straight Type, 1m
Hardness Testing block sets	
64AAA590	Reference material Shore, HH-300 Series Shore D 3pcs.
64AAA964	Reference material Shore, HH-300 Series Shore A 3pcs.
Testing stand	
811-012	Testing stand, HH-300 Series Shore D all types
811-013	Testing stand, HH-300 Series Shore A compact types
811-019	Testing stand, HH-300 Series Shore A long types

Testing stand

- Workstage dimension : ø90 mm
- Max. specimen height : 90 mm

Testing stand applications
These stands are used to mount Durometers. They allow constant-pressure hardness measurement by ensuring that the Durometer presses vertically on the workpiece surface at all times.
• Anyone can perform repeatable hardness measurement due to fewer possibilities of human error and measurement variations.
• The supplied weights can be attached directly to a Durometer and allow constant-pressure hardness measurement of large samples for which a stand cannot be used.
• The supplied weights are used for calibrating the spring tension of Durometers

Direct application of weights

All products to be sold to commercial customers. Product illustrations are without obligation. Product descriptions, in particular any and all technical specifications, are only binding when explicitly agreed upon. For suggested retail prices, please refer to the separate price list.

Hardness Test Blocks / Indenters

Hardness Test Blocks / Indenters

The daily or periodic verification of the hardness testing machine by the user is an important point on the way to a safe test result. In order to ensure perfect functioning of the hardness testing system, an indirect check of the machine by means of calibrated reference materials, also called hardness test blocks, is recommended to be carried out right before the daily use. In the indirect test, all parameters of the hardness testing system (test force, measuring system, indenter) are checked by the indentation on the calibrated reference material block. If the device is used only once a week, the check should only take place on this day. In three-shift operation, a check at the beginning of the shift is useful.
The hardness range of the hardness comparison plates should be selected so as to correspond as closely as possible to the hardness of the material to be tested. Now, at least one indentation, but more preferably several, is generated and evaluated. For example, damage to the indenter, and other disturbancies are easily noticed before testing the actualmaterial.

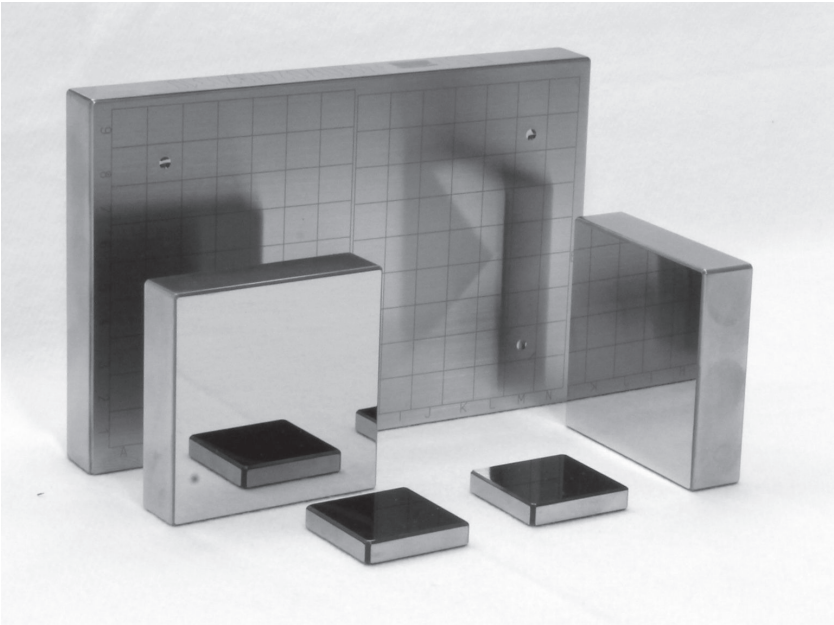

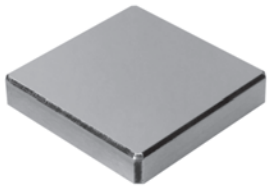

(30x30x6 mm)
Grid on request

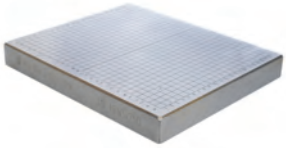

(150x100x16 mm)
Grid on request

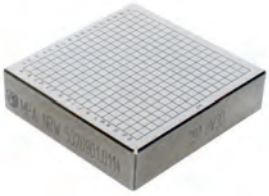

(60x60x16 mm)
Grid on request

All products to be sold to commercial customers. Product illustrations are without obligation. Product descriptions, in particular any and all technical specifications, are only binding when explicitly agreed upon. For suggested retail prices, please refer to the separate price list.

Hardness Test Blocks / Indenters

1. Rockwell Test Block with DAkkS / ISO certificate

No.	Description	Value	Scale	Shape	Size	Material
63ETB001	Reference material Rockwell ISO 6508-3	31	HRA	rectangle	60x60x16 mm	aluminum
63ETB010	Reference material Rockwell ISO 6508-3	68	HRA	rectangle	60x60x16 mm	steel
63ETB018	Reference material Rockwell ISO 6508-3	85	HRA	rectangle	60x60x16 mm	steel
63ETB021	Reference material Rockwell ISO 6508-3	40	HRBW	rectangle	60x60x16 mm	aluminum
63ETB023	Reference material Rockwell ISO 6508-3	65	HRBW	rectangle	60x60x16 mm	aluminum
63ETB028	Reference material Rockwell ISO 6508-3	95	HRBW	rectangle	60x60x16 mm	steel
63ETB031	Reference material Rockwell ISO 6508-3	20	HRC	rectangle	60x60x16 mm	steel
63ETB037	Reference material Rockwell ISO 6508-3	45	HRC	rectangle	60x60x16 mm	steel
63ETB042	Reference material Rockwell ISO 6508-3	65	HRC	rectangle	60x60x16 mm	steel
63ETB045	Reference material Rockwell ISO 6508-3	40	HRD	rectangle	60x60x16 mm	steel
63ETB050	Reference material Rockwell ISO 6508-3	60	HRD	rectangle	60x60x16 mm	steel
63ETB055	Reference material Rockwell ISO 6508-3	74	HRD	rectangle	60x60x16 mm	steel
63ETB059	Reference material Rockwell ISO 6508-3	81	HREW	rectangle	60x60x16 mm	aluminum
63ETB060	Reference material Rockwell ISO 6508-3	86	HREW	rectangle	60x60x16 mm	aluminum
63ETB065	Reference material Rockwell ISO 6508-3	80	HRF	rectangle	60x60x16 mm	aluminum
63ETB066	Reference material Rockwell ISO 6508-3	94	HRF	rectangle	60x60x16 mm	aluminum
63ETB071	Reference material Rockwell ISO 6508-3	32	HRG	rectangle	60x60x16 mm	aluminum
63ETB073	Reference material Rockwell ISO 6508-3	66	HRG	rectangle	60x60x16 mm	steel
63ETB075	Reference material Rockwell ISO 6508-3	83	HRG	rectangle	60x60x16 mm	steel
63ETB082	Reference material Rockwell ISO 6508-3	56	HRK	rectangle	60x60x16 mm	aluminum
63ETB083	Reference material Rockwell ISO 6508-3	73	HRK	rectangle	60x60x16 mm	aluminum
63ETB085	Reference material Rockwell ISO 6508-3	95	HRK	rectangle	60x60x16 mm	aluminum
63ETB089	Reference material Rockwell ISO 6508-3	72	HR15N	rectangle	60x60x16 mm	steel
63ETB094	Reference material Rockwell ISO 6508-3	85	HR15N	rectangle	60x60x16 mm	steel
63ETB096	Reference material Rockwell ISO 6508-3	90	HR15N	rectangle	60x60x16 mm	steel
63ETB102	Reference material Rockwell ISO 6508-3	46	HR30N	rectangle	60x60x16 mm	steel
63ETB106	Reference material Rockwell ISO 6508-3	64	HR30N	rectangle	60x60x16 mm	steel
63ETB109	Reference material Rockwell ISO 6508-3	77	HR30N	rectangle	60x60x16 mm	steel
63ETB115	Reference material Rockwell ISO 6508-3	25	HR45N	rectangle	60x60x16 mm	steel
63ETB120	Reference material Rockwell ISO 6508-3	55	HR45N	rectangle	60x60x16 mm	steel
63ETB122	Reference material Rockwell ISO 6508-3	66	HR45N	rectangle	60x60x16 mm	steel
63ETB128	Reference material Rockwell ISO 6508-3	73	HR15TW	rectangle	60x60x16 mm	aluminum
63ETB130	Reference material Rockwell ISO 6508-3	82	HR15TW	rectangle	60x60x16 mm	aluminum
63ETB131	Reference material Rockwell ISO 6508-3	88	HR15TW	rectangle	60x60x16 mm	aluminum
63ETB139	Reference material Rockwell ISO 6508-3	43	HR30TW	rectangle	60x60x16 mm	aluminum
63ETB141	Reference material Rockwell ISO 6508-3	60	HR30TW	rectangle	60x60x16 mm	aluminum
63ETB142	Reference material Rockwell ISO 6508-3	73	HR30TW	rectangle	60x60x16 mm	aluminum
63ETB147	Reference material Rockwell ISO 6508-3	12	HR45TW	rectangle	60x60x16 mm	aluminum
63ETB149	Reference material Rockwell ISO 6508-3	38	HR45TW	rectangle	60x60x16 mm	aluminum
63ETB151	Reference material Rockwell ISO 6508-3	58	HR45TW	rectangle	60x60x16 mm	aluminum

All products to be sold to commercial customers. Product illustrations are without obligation. Product descriptions, in particular any and all technical specifications, are only binding when explicitly agreed upon. For suggested retail prices, please refer to the separate price list.

Mitutoyo

Hardness Test Blocks / Indenters

2. Brinell Test Block with DAkkS / ISO certificate

No.	Description	Value	Scale	Shape	Size	Material
63ETB238	Refenrence material Brinell ISO 6506-3	80	HBW 1/30	rectangle	60x60x16 mm	aluminum
63ETB242	Refenrence material Brinell ISO 6506-3	200	HBW 1/30	rectangle	60x60x16 mm	steel
63ETB246	Refenrence material Brinell ISO 6506-3	400	HBW 1/30	rectangle	60x60x16 mm	steel
63ETB250	Refenrence material Brinell ISO 6506-3	600	HBW 1/30	rectangle	60x60x16 mm	steel
63ETB299	Refenrence material Brinell ISO 6506-3	80	HBW 2,5/62,5	rectangle	60x60x16 mm	aluminum
63ETB318	Refenrence material Brinell ISO 6506-3	200	HBW 2,5/187,5	rectangle	60x60x16 mm	steel
63ETB322	Refenrence material Brinell ISO 6506-3	400	HBW 2,5/187,5	rectangle	60x60x16 mm	steel
63ETB324	Refenrence material Brinell ISO 6506-3	500	HBW 2,5/187,5	rectangle	60x60x16 mm	steel
63ETB326	Refenrence material Brinell ISO 6506-3	600	HBW 2,5/187,5	rectangle	60x60x16 mm	steel
63ETB343	Refenrence material Brinell ISO 6506-3	80	HBW 5/62,5	rectangle	60x60x16 mm	aluminum
63ETB345	Refenrence material Brinell ISO 6506-3	130	HBW 5/62,5	rectangle	60x60x16 mm	aluminum
63ETB358	Refenrence material Brinell ISO 6506-3	80	HBW 5/125	rectangle	60x60x16 mm	aluminum
63ETB359	Refenrence material Brinell ISO 6506-3	110	HBW 5/125	rectangle	60x60x16 mm	aluminum
63ETB360	Refenrence material Brinell ISO 6506-3	130	HBW 5/125	rectangle	60x60x16 mm	aluminum
63ETB387	Refenrence material Brinell ISO 6506-3	80	HBW 5/250	rectangle	150x100x16 mm	aluminum
63ETB388	Refenrence material Brinell ISO 6506-3	110	HBW 5/250	rectangle	150x100x16 mm	aluminum
63ETB389	Refenrence material Brinell ISO 6506-3	130	HBW 5/250	rectangle	150x100x16 mm	aluminum
63ETB390	Refenrence material Brinell ISO 6506-3	160	HBW 5/250	rectangle	150x100x16 mm	aluminum
63ETB403	Refenrence material Brinell ISO 6506-3	110	HBW 5/750	rectangle	150x100x16 mm	aluminum
63ETB408	Refenrence material Brinell ISO 6506-3	300	HBW 5/750	rectangle	150x100x16 mm	steel
63ETB412	Refenrence material Brinell ISO 6506-3	500	HBW 5/750	rectangle	150x100x16 mm	steel
63ETB415	Refenrence material Brinell ISO 6506-3	650	HBW 5/750	rectangle	150x100x16 mm	steel
63ETB418	Refenrence material Brinell ISO 6506-3	80	HBW 10/250	rectangle	150x100x16 mm	aluminum
63ETB450	Refenrence material Brinell ISO 6506-3	80	HBW 10/1000	rectangle	150x100x16 mm	aluminum
63ETB451	Refenrence material Brinell ISO 6506-3	110	HBW 10/1000	rectangle	150x100x16 mm	aluminum
63ETB454	Refenrence material Brinell ISO 6506-3	200	HBW 10/1000	rectangle	150x100x16 mm	steel
63ETB488	Refenrence material Brinell ISO 6506-3	400	HBW 10/3000	rectangle	150x100x16 mm	steel
63ETB490	Refenrence material Brinell ISO 6506-3	500	HBW 10/3000	rectangle	150x100x16 mm	steel
63ETB493	Refenrence material Brinell ISO 6506-3	650	HBW 10/3000	rectangle	150x100x16 mm	steel

All products to be sold to commercial customers. Product illustrations are without obligation. Product descriptions, in particular any and all technical specifications, are only binding when explicitly agreed upon. For suggested retail prices, please refer to the separate price list.

Hardness Test Blocks / Indenters

3. Vickers Test Block with DAkkS / ISO certificate

No.	Description	Value	Scale	Shape	Size	Material
63ETB497	Reference material Vickers ISO 6507-3	200	HV0,01	square	30x30x6 mm	steel
63ETB498	Reference material Vickers ISO 6507-3	250	HV0,01	square	30x30x6 mm	steel
63ETB499	Reference material Vickers ISO 6507-3	300	HV0,01	square	30x30x6 mm	steel
63ETB514	Reference material Vickers ISO 6507-3	200	HV0,015	square	30x30x6 mm	steel
63ETB516	Reference material Vickers ISO 6507-3	300	HV0,015	square	30x30x6 mm	steel
63ETB518	Reference material Vickers ISO 6507-3	400	HV0,015	square	30x30x6 mm	steel
63ETB531	Reference material Vickers ISO 6507-3	200	HV0,02	square	30x30x6 mm	steel
63ETB535	Reference material Vickers ISO 6507-3	400	HV0,02	square	30x30x6 mm	steel
63ETB537	Reference material Vickers ISO 6507-3	500	HV0,02	square	30x30x6 mm	steel
63ETB548	Reference material Vickers ISO 6507-3	200	HV0,025	square	30x30x6 mm	steel
63ETB553	Reference material Vickers ISO 6507-3	450	HV0,025	square	30x30x6 mm	steel
63ETB558	Reference material Vickers ISO 6507-3	700	HV0,025	square	30x30x6 mm	steel
63ETB578	Reference material Vickers ISO 6507-3	200	HV0,05	square	30x30x6 mm	steel
63ETB583	Reference material Vickers ISO 6507-3	450	HV0,05	square	30x30x6 mm	steel
63ETB591	Reference material Vickers ISO 6507-3	850	HV0,05	square	30x30x6 mm	steel
63ETB595	Reference material Vickers ISO 6507-3	200	HV0,1	square	30x30x6 mm	steel
63ETB600	Reference material Vickers ISO 6507-3	450	HV0,1	square	30x30x6 mm	steel
63ETB607	Reference material Vickers ISO 6507-3	800	HV0,1	square	30x30x6 mm	steel
63ETB612	Reference material Brinell ISO 6507-3	200	HV0,2	square	30x30x6 mm	steel
63ETB617	Reference material Vickers ISO 6507-3	450	HV0,2	square	30x30x6 mm	steel
63ETB624	Reference material Vickers ISO 6507-3	800	HV0,2	square	30x30x6 mm	steel
63ETB629	Reference material Vickers ISO 6507-3	200	HV0,3	square	30x30x6 mm	steel
63ETB634	Reference material Vickers ISO 6507-3	450	HV0,3	square	30x30x6 mm	steel
63ETB641	Reference material Vickers ISO 6507-3	800	HV0,3	square	30x30x6 mm	steel
63ETB647	Reference material Vickers ISO 6507-3	200	HV0,5	square	30x30x6 mm	steel
63ETB652	Reference material Vickers ISO 6507-3	450	HV0,5	square	30x30x6 mm	steel
63ETB659	Reference material Vickers ISO 6507-3	800	HV0,5	square	30x30x6 mm	steel
63ETB664	Reference material Vickers ISO 6507-3	200	HV1	square	30x30x6 mm	steel
63ETB669	Reference material Vickers ISO 6507-3	450	HV1	square	30x30x6 mm	steel
63ETB676	Reference material Vickers ISO 6507-3	800	HV1	square	30x30x6 mm	steel
63ETB764	Reference material Vickers ISO 6507-3	200	HV1	square	60x60x16 mm	steel
63ETB769	Reference material Vickers ISO 6507-3	450	HV1	square	60x60x16 mm	steel
63ETB776	Reference material Vickers ISO 6507-3	800	HV1	square	60x60x16 mm	steel
63ETB684	Reference material Vickers ISO 6507-3	200	HV2	square	60x60x16 mm	steel
63ETB689	Reference material Vickers ISO 6507-3	450	HV2	square	60x60x16 mm	steel
63ETB696	Reference material Vickers ISO 6507-3	800	HV2	square	60x60x16 mm	steel
63ETB704	Reference material Vickers ISO 6507-3	200	HV3	square	60x60x16 mm	steel
63ETB709	Reference material Brinell ISO 6507-3	450	HV3	square	60x60x16 mm	steel
63ETB716	Reference material Vickers ISO 6507-3	800	HV3	square	60x60x16 mm	steel
63ETB724	Reference material Vickers ISO 6507-3	200	HV5	square	60x60x16 mm	steel
63ETB729	Reference material Vickers ISO 6507-3	450	HV5	square	60x60x16 mm	steel
63ETB736	Reference material Vickers ISO 6507-3	800	HV5	square	60x60x16 mm	steel
63ETB743	Reference material Vickers ISO 6507-3	200	HV10	square	60x60x16 mm	steel
63ETB853	Reference material Vickers ISO 6507-3	450	HV10	square	60x60x16 mm	steel
63ETB755	Reference material Vickers ISO 6507-3	800	HV10	square	60x60x16 mm	steel
63ETB869	Reference material Vickers ISO 6507-3	200	HV20	square	60x60x16 mm	steel
63ETB874	Reference material Vickers ISO 6507-3	450	HV20	square	60x60x16 mm	steel
63ETB881	Reference material Vickers ISO 6507-3	800	HV20	square	60x60x16 mm	steel
63ETB891	Reference material Vickers ISO 6507-3	200	HV30	square	60x60x16 mm	steel
63ETB896	Reference material Vickers ISO 6507-3	450	HV30	square	60x60x16 mm	steel
63ETB903	Reference material Vickers ISO 6507-3	800	HV30	square	60x60x16 mm	steel
63ETB909	Reference material Vickers ISO 6507-3	200	HV50	square	60x60x16 mm	steel
63ETB914	Reference material Vickers ISO 6507-3	450	HV50	square	60x60x16 mm	steel
63ETB921	Reference material Vickers ISO 6507-3	800	HV50	square	60x60x16 mm	steel
63ETB927	Reference material Vickers ISO 6507-3	800	HV100	square	60x60x16 mm	steel
63ETB932	Reference material Vickers ISO 6507-3	450	HV100	square	60x60x16 mm	steel
63ETB939	Reference material Vickers ISO 6507-3	800	HV100	square	60x60x16 mm	steel

4. Knoop Test Block with DAkkS / ISO certificate

No.	Description	Value	Scale	Shape	Size	Material
63ETB942	Reference material Knoop ISO 4545-3	140	HK0,005	square	30x30x6 mm	steel

All products to be sold to commercial customers. Product illustrations are without obligation. Product descriptions, in particular any and all technical specifications, are only binding when explicitly agreed upon. For suggested retail prices, please refer to the separate price list.

Mitutoyo

Hardness Test Blocks / Indenters

4. Knoop Test Block with DAkkS / ISO certificate

No.	Description	Value	Scale	Shape	Size	Material
63ETB946	Reference material Knoop ISO 4545-3	450	HK0,005	square	30x30x6 mm	steel
63ETB950	Reference material Knoop ISO 4545-3	140	HK0,01	square	30x30x6 mm	steel
63ETB954	Reference material Knoop ISO 4545-3	450	HK0,01	square	30x30x6 mm	steel
63ETB958	Reference material Knoop ISO 4545-3	140	HK0,15	square	30x30x6 mm	steel
63ETB962	Reference material Knoop ISO 4545-3	450	HK0,15	square	30x30x6 mm	steel
63ETB966	Reference material Knoop ISO 4545-3	140	HK0,025	square	30x30x6 mm	steel
63ETB970	Reference material Knoop ISO 4545-3	450	HK0,025	square	30x30x6 mm	steel
63ETB973	Reference material Knoop ISO 4545-3	720	HK0,025	square	30x30x6 mm	steel
63ETB974	Reference material Knoop ISO 4545-3	140	HK0,05	square	30x30x6 mm	steel
63ETB978	Reference material Knoop ISO 4545-3	450	HK0,05	square	30x30x6 mm	steel
63ETB982	Reference material Knoop ISO 4545-3	840	HK0,05	square	30x30x6 mm	steel
63ETB983	Reference material Knoop ISO 4545-3	140	HK0,1	square	30x30x6 mm	steel
63ETB987	Reference material Knoop ISO 4545-3	450	HK0,1	square	30x30x6 mm	steel
63ETB991	Reference material Knoop ISO 4545-3	840	HK0,1	square	30x30x6 mm	steel
63ETB992	Reference material Knoop ISO 4545-3	140	HK0,2	square	30x30x6 mm	steel
63ETB995	Reference material Knoop ISO 4545-3	450	HK0,2	square	30x30x6 mm	steel
63ETB999	Reference material Knoop ISO 4545-3	840	HK0,2	square	30x30x6 mm	steel
63ETB563	Reference material Knoop ISO 4545-3	140	HK0,3	square	30x30x6 mm	steel
63ETB567	Reference material Knoop ISO 4545-3	450	HK0,3	square	30x30x6 mm	steel
63ETB571	Reference material Knoop ISO 4545-3	840	HK0,3	square	30x30x6 mm	steel
63ETB464	Reference material Knoop ISO 4545-3	140	HK0,5	square	30x30x6 mm	steel
63ETB468	Reference material Knoop ISO 4545-3	450	HK0,5	square	30x30x6 mm	steel
63ETB472	Reference material Knoop ISO 4545-3	840	HK0,5	square	30x30x6 mm	steel
63ETB473	Reference material Knoop ISO 4545-3	140	HK1	square	30x30x6 mm	steel
63ETB477	Reference material Knoop ISO 4545-3	450	HK1	square	30x30x6 mm	steel
63ETB495	Reference material Knoop ISO 4545-3	840	HK1	square	30x30x6 mm	steel
63ETB496	Reference material Knoop ISO 4545-3	140	HK2	square	60x60x16 mm	steel
63ETB530	Reference material Knoop ISO 4545-3	450	HK2	square	60x60x16 mm	steel
63ETB594	Reference material Knoop ISO 4545-3	840	HK2	square	60x60x16 mm	steel

5. Brinell Indenter

No.	Ball Indenter	Ball only	Material	Machine type	Comment
19BAA162		5 mm	carbide	HR-100-200-300-400-500 Series Durotwin HV-100 Series	without certificate
19BAA162MPA		5mm	carbide	HR-100-200-300-400-500 Series Durotwin HV-100 Series	with ISO certificate
19BAA163		10 mm	carbide	HR-100-200-300-400-500 Series Durotwin HV-100 Series	without certificate
19BAA163MPA		10mm	carbide	HR-100-200-300-400-500 Series Durotwin HV-100 Series	with ISO certificate
19BAA277	1mm		with carbide ball	HR-100-200-300-400-500 Series Durotwin HV-100 Series	without certificate
19BAA279	2,5mm		with carbide ball	HR-100-200-300-400-500 Series Durotwin HV-100 Series	without certificate
19BAA280	5mm		with carbide ball	HR-100-200-300-400-500 Series Durotwin HV-100 Series	without certificate
19BAA281		1 m	carbide	HR-100-200-300-400-500 Series Durotwin HV-100 Series	without certificate
19BAA281MPA		1mm	carbide	HR-100-200-300-400-500 Series Durotwin HV-100 Series	with ISO certificate
19BAA283		2,5 mm	carbide	HR-100-200-300-400-500 Series Durotwin HV-100 Series	without certificate
19BAA283MPA		2,5mm	carbide	HR-100-200-300-400-500 Series Durotwin HV-100 Series	with ISO certificate
19BAA284	10mm		with carbide ball	HR-100-200-300-400-500 Series Durotwin HV-100 Series	without certificate

6. Vickers Indenter

No.	Diamond Indenter	Material	Machine type	Comment
19BAA059MPA	HV 0,01	HM/MVK	HM-100 HM-200 MVK Series	with ISO certificate
19BAA060MPA	HV 0,2	HV/AVK	HV-100 AVK Series	with ISO certificate

7. Knoop Indenter

No.	Diamond Indenter	Material	Machine type
19BAA062MPA	HK 0,01	HM/MVK	HM-100 HM-200 MVK Series with ISO certificate
19BAA063MPA	HK 0,2	HV/AVK	HV-100 AVK Series with ISO certificate

All products to be sold to commercial customers. Product illustrations are without obligation. Product descriptions, in particular any and all technical specifications, are only binding when explicitly agreed upon. For suggested retail prices, please refer to the separate price list.

Hardness Test Blocks / Indenters

8. Rockwell Indenter

No.	Diamond Indenter	Ball Indenter	Ball only	Material	Machine type	Comment
19BAA072ASTM	Rockwell diamond			standard	all Mitutoyo Rockwell machines	ASTM E-18
19BAA072MPA	Rockwell diamond			standard	all Mitutoyo Rockwell machines	with ISO certificate
19BAA072MPA10	Rockwell diamond			standard	all Mitutoyo Rockwell machines	extended measuring range down to 10HRC
19BAA072MPAL	Rockwell diamond			slim 6mm wide	all Mitutoyo Rockwell machines	with ISO certificate
19BAA073MPA	Rockwell diamond			standard	all Mitutoyo Rockwell machines	ISO 6508-3
19BAA292MPA	Rockwell diamond			short for Ø22mm	HR 500 Series	with ISO certificate
19BAA504		3,175 mm		with carbide ball	all Mitutoyo Rockwell machines	without certificate
19BAA505		6,35 mm		with carbide ball	all Mitutoyo Rockwell machines	without certificate
19BAA506		12,7 mm		with carbide ball	all Mitutoyo Rockwell machines	without certificate
19BAA507			1,5875 mm	carbide	all Mitutoyo Rockwell machines	without certificate
19BAA507MPA			1,5875 mm	carbide	all Mitutoyo Rockwell machines	with ISO certificate
19BAA508			3,175 mm	carbide	all Mitutoyo Rockwell machines	without certificate
19BAA508MPA			3,175 mm	carbide	all Mitutoyo Rockwell machines	with ISO certificate
19BAA509			6,35 mm	carbide	all Mitutoyo Rockwell machines	without certificate
19BAA509MPA			6,35 mm	carbide	all Mitutoyo Rockwell machines	with ISO certificate
19BAA510			12,7 mm	carbide	all Mitutoyo Rockwell machines	without certificate
19BAA510MPA			12,7 mm	carbide	all Mitutoyo Rockwell machines	with ISO certificate
19BAA515		1,5875 mm		with carbide ball	all Mitutoyo Rockwell machines	without certificate

All products to be sold to commercial customers. Product illustrations are without obligation. Product descriptions, in particular any and all technical specifications, are only binding when explicitly agreed upon. For suggested retail prices, please refer to the separate price list.

CMM Software
Page 561

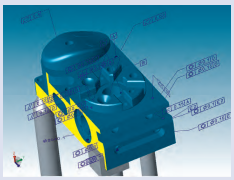

Manual CMMs
Page 565

Small- and Medium Size CMMs
Page 566

Large Size CMMs
Page 572

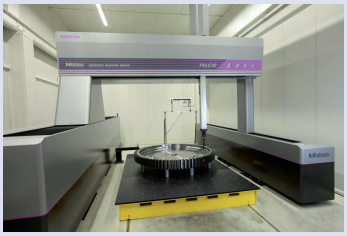

In-Line and Shopfloor CMMs
Page 573

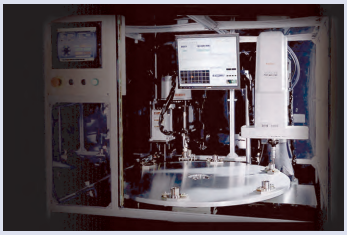

Measuring Heads, Probes and Styli
Page 576

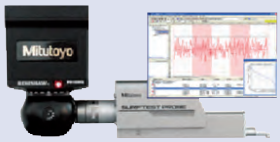

Fixtures and Enclosures
Page 582

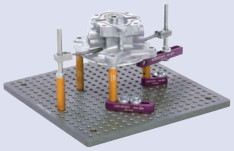

All products to be sold to commercial customers. Product illustrations are without obligation. Product descriptions, in particular any and all technical specifications, are only binding when explicitly agreed upon. For suggested retail prices, please refer to the separate price list.

CMM Software

MiCAT Planner

The new CMM software generation for an efficient, safe and automatic CMM programming. MiCAT Planner drastically reduces the programming time and thus will make your work much more efficient!
Programs will now be made within minutes where it took hours or even days before.
MiCAT planner is using tolerance information inside the CAD file and creates the complete part program by considering your individual measurement strategy and your specific CMM.
This guarantees a collision-free program in the shortest possible time.

- Automatic program generation in just 5 steps!
- Fully collision controlled
- Program path optimization to reduce measurement time

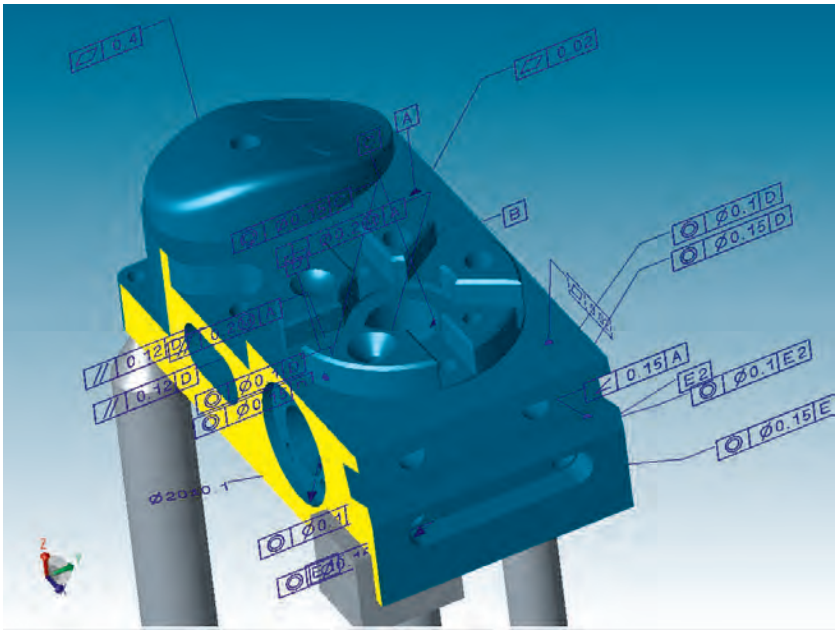

Step 1: Load the CAD model.
- **Various CAD transaltors available: stp, Catia V4/V5, Creo, NX, Parasolid, SolidEdge, SolidWorks, Inventor**
- **Add missing tolerance information**

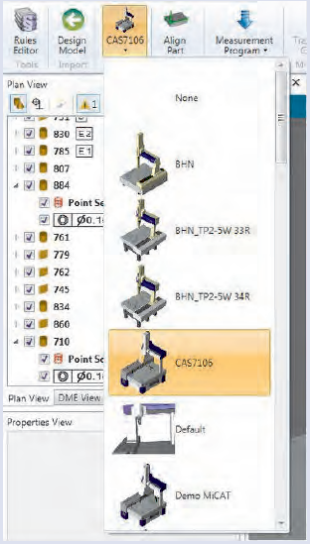

Step 2: Select the CMM

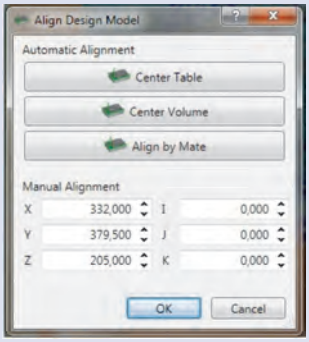

Step 3: Align CAD model

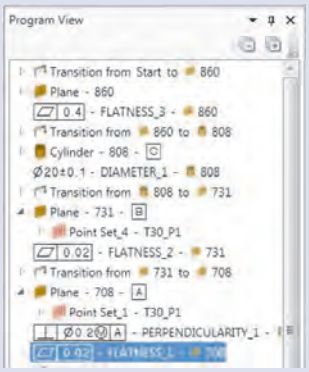

Step 4: Create the part program

Step 5: Transfer to MCOSMOS

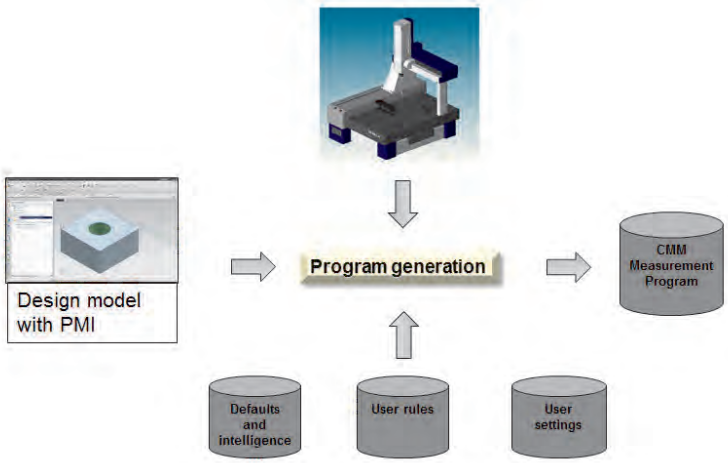

Workflow by MiCAT Planner

See how fast programs are generated with MiCAT Planner

All products to be sold to commercial customers. Product illustrations are without obligation. Product descriptions, in particular any and all technical specifications, are only binding when explicitly agreed upon. For suggested retail prices, please refer to the separate price list.

Mitutoyo

CMM Software

MCOSMOS - The Modular Software for all Kinds of Measurement

The heart of your CMM: to organize, execute, calculate and report.
- Organize your measurement programs on the network
- Add comands and instructions to guide the operator
- Create individual reports meeting your customer's needs
- Archieve your results in formats like PDF, XLS, HTML and many other
- SPC with MeasurLink or export data to CAQ systems
- Export detected geometrical elements to CAD systems
- Revision Management for authorised usage of validated partprograms **as standard**
- Meet the requirements of FDA Title 21 CFR Part 11 without extra costs

The following packages are also available for Offline programming.
The so called "**Offline MCOSMOS**" packages allow you to create part programs whilst the CMM is proofing your product quality.

Software package	MCOSMOS Manual	MCOSMOS-1 Basic package	MCOSMOS-2 CAD package	MCOSMOS-3 Full package
Part Manager • System configuration • Part program handling • Data management • Create report templates	●	●	●	●
GEOPAK • On/Off-line • For prismatic elements • Operator guidance • Parametric programs	●	●	●	●
CAT1000P • CAD programming • For prismatic elements • Collision control • Incl. simulation			●	●
CAT1000S • CAD programming • Free-form inspection • Surface + edge points • Grahical Reports			●	●
SCANPAK • For 2D contours • Evaluate + manipulate • Graphical Reports • Data exchange to CAD + NC				●

Additional software packages meeting your needs:

MeasurLink:
SPC software with certified AQDEF interface. Allows you to collect data from different vendors and devices. Its database offers collecting and analyzing data from all over the world, analyse your process and create individual reports.

GEARPAK:
Turn your CMM into a gear measurement device! Extend your capabilities, measure gears, worm gears, helical gears. Just input the gear parameters - the rest will be done by GEARPAK: measurement strategy, path generation, probe changes, and of course the measurement report of your gear.

ROUNDPAK-CMM
Special evaluation tool for scanning measurements typically known from form measurement instruments. Topographic views and evaluation of form and position deviations.

PartManager

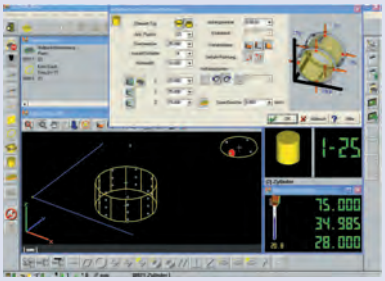
GEOPAK

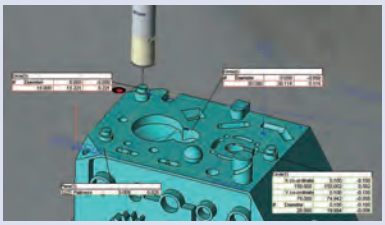
CAT1000P

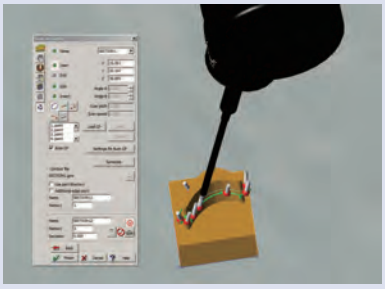
CAT1000S

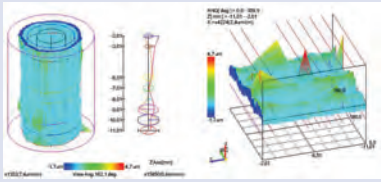
ROUNDPAK-CMM

For details, please ask for the MCOSMOS brochure.

All products to be sold to commercial customers. Product illustrations are without obligation. Product descriptions, in particular any and all technical specifications, are only binding when explicitly agreed upon. For suggested retail prices, please refer to the separate price list.

CMM Software

MAFIS Express - Rapid Air Foil Inspection Software

Mitutoyo introduces the fastest way for inspecting blades and blisks: MAFIS Express.

- Increases your throughput by time savings up to 90%
- Intuitive programming and easy handling
- For many kinds of airfoils like blades, blisks, gas turbines
- Easy Off-line programming on the CAD model
- Individual setting of the inspection routine: measure all or just some dedicated intersections
- Support of standards set by Rolls-Royce®, P&W, Siemens®, GE®, Honeywell®, SNECMA, Turbomeca® and others
- Ideal with the Revo® or SP25M probe heads

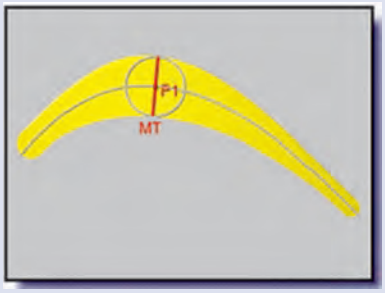

Maximum thickness

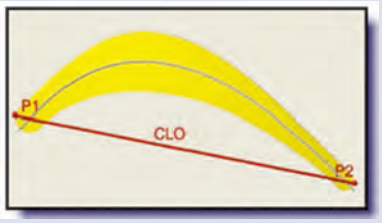

Overall Chord Length

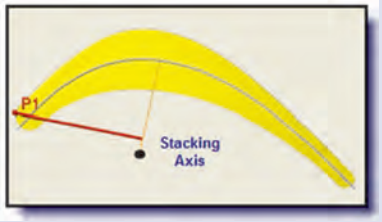

Stacking Axis

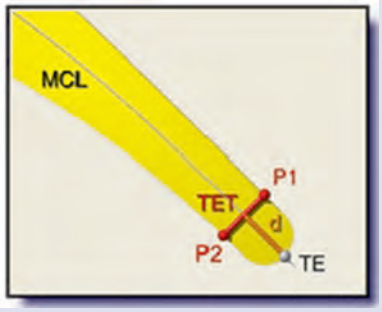

Trailing Edge – thickness on specific distance

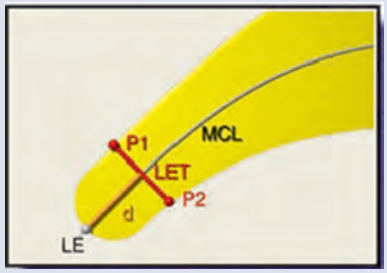

Leading Edge – thickness on specific distance

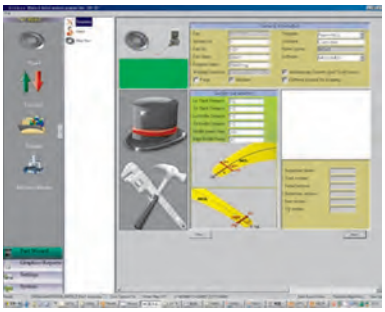

MAFIS Express

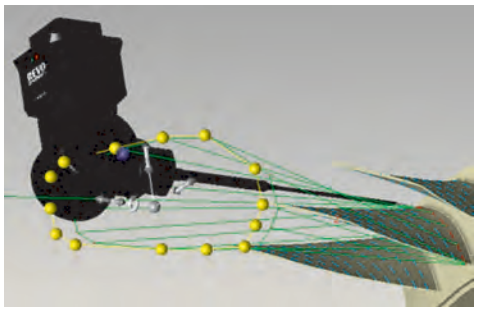

Setting intersections on the CAD model

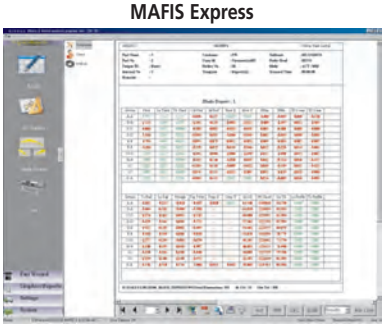

Numerical evaluation

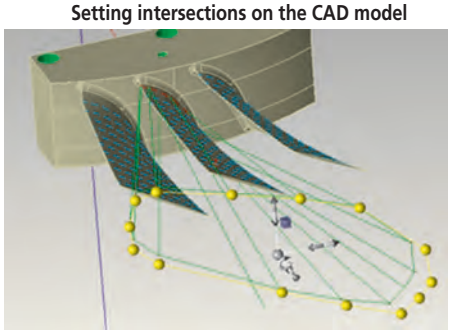

Optimizing the probe path

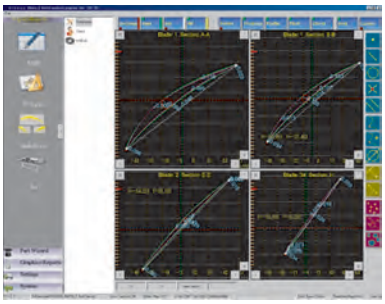

Graphical evaluation

Take a look how quick air foils are inspected by MAFIS Express

All products to be sold to commercial customers. Product illustrations are without obligation. Product descriptions, in particular any and all technical specifications, are only binding when explicitly agreed upon. For suggested retail prices, please refer to the separate price list.

CMM Software

MSURF-S and MSURF-I are dedicated for line laser scanner measurment with SurfaceMeasure series by Mitutoyo.

MSURF-S

- Scanning paths can be created by simply defining three items : the scanning starting point, the scanning length, and the scanning width
- Scanning paths can be stored as measurement macros
- Point cloud data obtained from scanning can be exported in text or STL format
- MSURF-S can be started from MCOSMOS

MSURF-I

- Importing CAD data
- Feature-by-feature comparison
- Comparison of cross-sectional shapes

MSURF Planner

- Automatic scanning path programming.
- Automatic path generation for surface or feature extraction
- Mirroring function

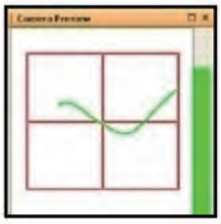

Screen sample from MSURF-S

Screen sample from MSURF-S

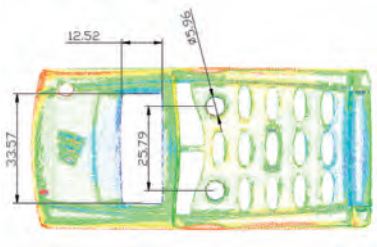

Screen sample from MSURF-I

MSURF-G

Off-line version for part program generation

- Semi-automatic function for creating measurement paths with optimum probe orientation
- Detection of collision between the probe and the workpiece model
- Generation of simulated data for the point cloud expected to be obtained through scanning
- Displaying measurement movements (scanner movements) in animation

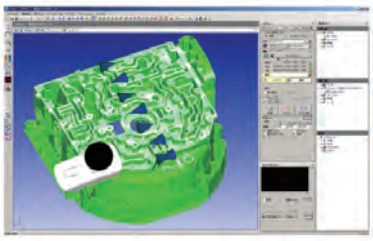

Screen sample from MSURF-G

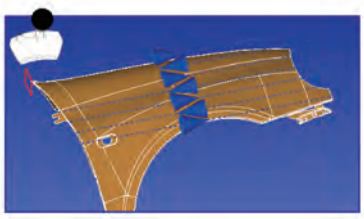

Screen sample from MSURF-G

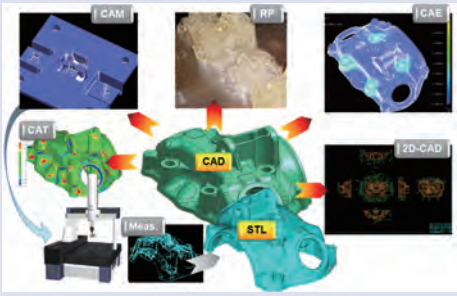

Screen sample from MSURF-S/I

SurfaceMeasure

SurfaceMeasure 606T

All products to be sold to commercial customers. Product illustrations are without obligation. Product descriptions, in particular any and all technical specifications, are only binding when explicitly agreed upon. For suggested retail prices, please refer to the separate price list.

CRYSTA-PLUS M Series

Series 196 - Manual CMM

This is a manual floating type coordinate measuring machine designed to give you very high accuracy in a wide range of applications, from simple dimensional to complex form measurement. The Crysta-Plus M offers you the following benefits:

- High-precision air bearings and lightweight moving members give you very smooth operation.
- With powerful MCOSMOS software
- Continuous fine feed over the entire measuring range.
- You can also add an optional temperature compensation system.

Specifications

Digital step	0,5 µm
Accuracy	E0, MPE from: (3+0,4L/100) µm
Guide system	Air bearing
Axis clamp	One-touch air clamp
Fine feed	Entire range

One-touch air clamp and fine feed for rapid and easy positioning

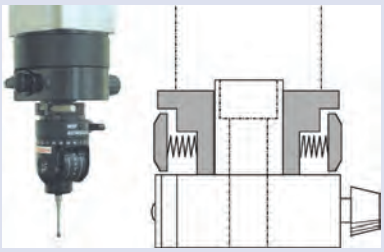

Ergonomically designed guide grip on Z-axis for reliable measurement (only for Crysta-Plus M776 and M7106)

Accuracy is specified for the following environmental conditions for the CMM

Temperature range		19°C - 21°C	**15°C - 30°C***
Temperature change	Per hour	-	**2 K**
	Per 24 hours	-	**5 K**
Temperature gradient	Vertical	0.5 K/m	**1 K/m**
	Horizontal	0.5 K/m	**1 K/m**

***The values shown in bold in the table above apply when using the temperature compensation system (optional):**

CRYSTA-Plus M brochure on request

Mitutoyo offers you over 600 styli plus highly specialised equipment for your measuring task.

Crysta-Plus M574

Crysta-Plus M7106

Crysta-Plus M Models:

No.	Model	Range [mm]	Loading Weight [kg]	Loading Height [mm]	Mass [kg]
196-683	443	400 x 400 x 300	180	480	410
196-684D	443	400 x 400 x 300	180	480	410
196-591	544	500 x 400 x 400	180	590	512
196-592	544	500 x 400 x 400	180	590	512
196-596	574	500 x 700 x 400	180	590	646
196-597	574	500 x 700 x 400	180	590	646
196-342	776	700 x 700 x 600	500	800	1560
196-352	7106	700 x 1000 x 600	800	800	1800

MCOSMOS

All products to be sold to commercial customers. Product illustrations are without obligation. Product descriptions, in particular any and all technical specifications, are only binding when explicitly agreed upon. For suggested retail prices, please refer to the separate price list.

CRYSTA-APEX S 500, 700 & 900 Series

Series 357 - Compact shop floor CNC CMM

The CRYSTA-APEX S Series is a high performance, cost effective coordinate measuring machine, designed and constructed according to Mitutoyo's extensive experience in CNC CMM technology. It offers you the following benefits:

- Lightweight materials and an innovative machine structure deliver high motion stability, accuracy and affordability.
- The temperature compensation function (16°C to 26°C) allows you to take accurate measurements even on the shop floor.
- Compatible vision and scanning probe technologies give you flexible and effective measurement capabilities.
- Multi-sensors capability

CRYSTA-Apex S9106

CRYSTA-Apex S Models:

No.	Model	Range [mm]	Loading Weight [kg]	Loading Height [mm]	Mass [kg]
191-244-10	544	500 x 400 x 400	180	545	515
191-248-10	574	500 x 700 x 400	180	545	625
191-252-10	776	700 x 700 x 600	800	800	1675
191-254-10	7106	700 x 1000 x 600	1000	800	1951
191-292-10	9106	900 x 1000 x 600	1200	800	2231
191-292H-10	9108	900 x 1000 x 800	1200	1000	2261
191-294-10	9166	900 x 1600 x 600	1500	800	2868
191-294H-10	9168	900 x 1600 x 800	1500	1000	2898
191-296-10	9206	900 x 2000 x 600	1800	800	3912
191-296H-10	9208	900 x 2000 x 800	1800	1000	3942

Specifications

Digital step	0,1 µm
Accuracy	E0, MPE from: (1,7+0,3L/100) µm
Max. drive speed	519 mm/s (3-axis)

Accuracy is specified for the following environmental conditions for the CMM:

Temperature range		18°C - 22°C	16°C - 26°C
Temperature change	Per hour	1 K	1 K
	Per 24 hours	2 K	5 K
Temperature gradient	Vertical	1 K/m	1 K/m
	Horizontal	1 K/m	1 K/m

Joystick controller (optional)
Features:
-2 Levers
-Speed control
-Axis clamping
-Change operating position
-Store position

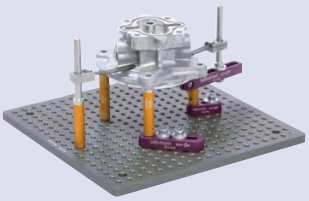

Mitutoyo eco-fix fixture kits:
- flexible & quick setup
- time & cost saving
- easy adaption of product changes

CRYSTA-Apex S brochure on request

Scan QR Code with your mobile device and watch our product videos on YouTube

All products to be sold to commercial customers. Product illustrations are without obligation. Product descriptions, in particular any and all technical specifications, are only binding when explicitly agreed upon. For suggested retail prices, please refer to the separate price list.

CRYSTA-APEX S 1200 Series

Series 191 - Standard CNC CMM

The CRYSTA-APEX S Series is a high performance, cost effective coordinate measuring machine, designed and constructed according to Mitutoyo's extensive experience in CNC CMM technology. It offers you the following benefits:

- Lightweight materials and an innovative machine structure deliver high motion stability, accuracy and affordability.
- The temperature compensation function (16°C to 26°C) allows you to take accurate measurements even on the shop floor.
- Compatible vision and scanning probe technologies give you flexible and effective measurement capabilities.
- Multi-sensors capability

Specifications

Digital step	0,1 µm
Accuracy	E0, MPE from: (2,3+0,3L/100) µm
Max. drive speed	693 mm/s

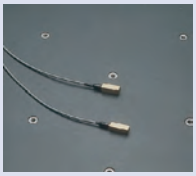

Temperature compensation system (temperature sensors)

Accuracy is specified for the following environmental conditions for the CMM:

Temperature range		18°C - 22°C	16°C - 26°C
Temperature change	Per hour	1 K	1 K
	Per 24 hours	2 K	5 K
Temperature gradient	Vertical	1 K/m	1 K/m
	Horizontal	1 K/m	1 K/m

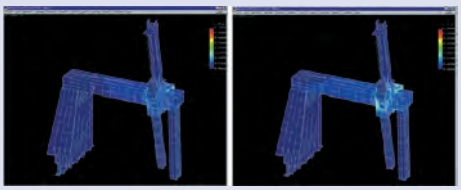

The machine structure has been optimized using FEM (Finite-element Method) and modal analysis

Mitutoyo offers you over 600 styli plus highly specialised equipment for your measuring task - Refer to the small tool section of the catalogue for detailed information.

Refer to the CRYSTA-Apex S brochure

CRYSTA-Apex S 122010

CRYSTA-Apex S Models:

No.	Model	Range [mm]	Loading Weight [kg]	Loading Height [mm]	Mass [kg]
191-392-10	121210	1200 x 1200 x 1000	2000	1000	4050
191-394-10	122010	1200 x 2000 x 1000	2500	1000	6150
191-396-10	123010	1200 x 3000 x 1000	3000	1000	9110

All products to be sold to commercial customers. Product illustrations are without obligation. Product descriptions, in particular any and all technical specifications, are only binding when explicitly agreed upon. For suggested retail prices, please refer to the separate price list.

CRYSTA-APEX S 1600 & 2000 Series

Series 191 - Standard CNC CMM

Large size and high performance CNC CMM, designed to provide high accuracy in various environment, ready for touch trigger probe, scanning probe, optical probe and laser scanner probe.

- Proven bridge type construction
- High rigidity air-bearing guiding on every axis
- High accuracy
- High speed and acceleration
- Temperature compensation from 16° to 24°C
- Glass scale with high resolution 0,1 µm
- Granite working table with M8 threads
- Multi-Function Joystick Box including two levers and speed adjustment
- Optional with anti-vibration table

CRYSTA-Apex S 163012

CRYSTA-Apex S Models:

No.	Model	Range [mm]	Loading Weight [kg]	Loading Height [mm]	Mass [kg]
191-286-10EU	162012	1600 x 2000 x 1200	3000	1400	9300
191-266-10EU	163012	1600 x 3000 x 1200	3500	1400	10600
191-276-10EU	164012	1600 x 4000 x 1200	4500	1400	14800
191-286H-10EU	162016	1600 x 2000 x 1600	3000	1800	9350
191-266H-10EU	163016	1600 x 3000 x 1600	3500	1800	10650
191-366H-10EU	203016	2000 x 3000 x 1600	4000	1800	14100
191-276H-10EU	164016	1600 x 4000 x 1600	4500	1800	14850
191-376H-10EU	204016	2000 x 4000 x 1600	5000	1800	19400

Specifications

Digital step	0,1 µm
Accuracy	E0, MPE from: (3,3+0,45L/100) µm
Max. drive speed	693 mm/s

Joystick controller

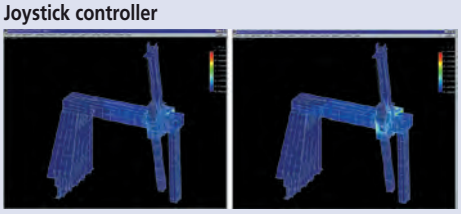

The machine structure has been optimized using FEM (Finite-element Method) and modal analysis

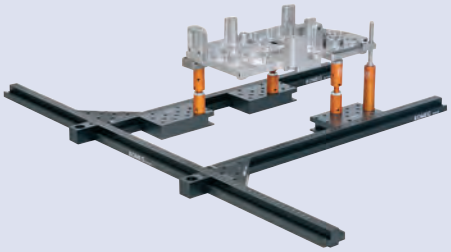

Quick Rail
The perfect system for a big variation of parts

Refer to the CRYSTA-Apex S brochure

All products to be sold to commercial customers. Product illustrations are without obligation. Product descriptions, in particular any and all technical specifications, are only binding when explicitly agreed upon. For suggested retail prices, please refer to the separate price list.

STRATO-APEX 500, 700 & 900 Series

Series 355 - High accuracy CNC CMM

This a high accuracy CNC coordinate measuring machine that allows you to get accurate results at lightning speed.
The STRATO-APEX Series offers you the following benefits:
- High measurement accuracy and high-speed motion
- High-performance scanning.
- Ultra high precision scales on each axis.
- Anti-vibration system reduces the impact of nearby vibration sources (optional for 574)
- Multi-sensors capability

Specifications

Digital step	500: 0,05 µm 700/900: 0,02 µm
Accuracy	E0, MPE from: (0,7+0,25L/100) µm
Max. drive speed	519 mm/s

Accuracy is specified for the following environmental conditions for the CMM:

Temperature range		19°C - 21°C
Temperature change	Per hour	1 K
	Per 24 hours	2 K
Temperature gradient	Vertical	1 K/m
	Horizontal	1 K/m

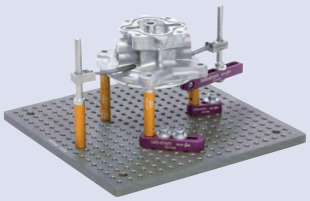

Mitutoyo eco-fix fixture kits:
- flexible & quick setup
- time & cost saving
- easy adaption of product changes

Refer to the STRATO-Apex brochure

STRATO-Apex 9106

STRATO-Apex Models:

No.	Model	Range [mm]	Loading Weight [kg]	Loading Height [mm]	Mass [kg]
355-522-10	574	500 x 700 x 400	180	560	1530
355-502-10	776	700 x 700 x 600	500	770	1895
355-507-10	7106	700 x 1000 x 600	800	770	2180
355-512-10	9106	900 x 1000 x 600	800	770	2410
355-517-10	9166	900 x 1600 x 600	1200	770	3085

All products to be sold to commercial customers. Product illustrations are without obligation. Product descriptions, in particular any and all technical specifications, are only binding when explicitly agreed upon. For suggested retail prices, please refer to the separate price list.

STRATO-APEX 1600 Series

Series 355 - High accuracy CNC CMM

High precision large size bridge type CNC CMM, designed to provide top scanning performance with high accuracy, ready for touch trigger probe, scanning probe, optical probe, laser scanner probe.

- Improve structural rigidity bridge type construction with compensation technology
- High accuracy
- High speed and acceleration
- Temperature compensation from 18° to 22°C
- High precision glass scale with resolution 0,05 µm
- Integrated vibration-damping units with auto-levelling air springs
- Granite working table with M8 threads
- Multi-Function Joystick Box including two levers and a speed adjustment

STRATO-Apex Models:

No.	Model	Range [mm]	Loading Weight [kg]	Loading Height [mm]	Mass [kg]
355-532-10	162012	1600 x 2000 x 1200	3500	1350	11150
355-534-10	162016	1600 x 2000 x 1600	3500	1750	11200
355-536-10	163012	1600 x 3000 x 1200	4000	1350	15300
355-538-10	163016	1600 x 3000 x 1600	4000	1750	15350

Specifications

Digital step	0,05 µm
Accuracy	E0, MPE from: (2,5+0,4L/100) µm
Max. drive speed	606 mm/s
3D Acceleration	1350 mm/s²

Accuracy is specified for the following environmental conditions for the CMM:*

Temperature range		18°C - 22°C
Temperature change	Per hour	1 K
	Per 24 hours	2 K
Temperature gradient	Vertical	1 K/m
	Horizontal	1 K/m

Mitutoyo offers you over 600 styli plus highly specialised equipment for your measuring task.

Refer to the STRATO-Apex brochure

All products to be sold to commercial customers. Product illustrations are without obligation. Product descriptions, in particular any and all technical specifications, are only binding when explicitly agreed upon. For suggested retail prices, please refer to the separate price list.

LEGEX Series

Specifications

Digital step	0,01 µm
Accuracy	E0, MPE from: (0,28+0,1L/100) µm
Max. drive speed	200 mm/s

Accuracy is specified for the following environmental conditions for the CMM*

Temperature range		20±1°C
Temperature change	Per hour	0,5 K
	Per 24 hours	1 K/m
Temperature gradient	Vertical	1 K/m
	Horizontal	1 K/m

CMM calibration using a virtually zero thermal expansion glass gauge

Mitutoyo offers you over 600 styli plus highly specialised equipment for your measuring task.

Series 356 - Ultra-High Precision Premium CNC CMM

This LEGEX Series is the most accurate CNC coordinate measuring machine that gives you the ultimate accuracy.
The LEGEX Series offers you the following benefits:

- Rigorous analysis of all possible error-producing factors, and elimination or minimisation of their effects, delivers unsurpassed accuracy of 0,28µm.
- Ultra-high accuracy crystallised-glass scale with the ultra-low expansion coefficient of $0{,}01 \times 10^{-6}$/K is used on each axis.
- The fixed bridge structure and precision air bearings, running on highly rigid guideways, give you superior motion stability and ultra-high geometrical accuracy.
- You can use many different types of optional probe systems, including touch-trigger probes, laser scanning probes, and a vision measuring probe.

Legex 9106

LEGEX Models:

No.	Model	Range [mm]	Loading Weight [kg]	Loading Height [mm]	Mass [kg]
356-403-10	574	500 x 700 x 450	250	700	3500
356-413-10	774	700 x 700 x 450	500	700	5000
356-423-10	776	700 x 700 x 600	500	850	5100
356-433-10	9106	900 x 1000 x 600	800	850	6500

All products to be sold to commercial customers. Product illustrations are without obligation. Product descriptions, in particular any and all technical specifications, are only binding when explicitly agreed upon. For suggested retail prices, please refer to the separate price list.

FALCIO-APEX Gantry Series

Series 355 - High accuracy Large CNC CMM

High precision gantry type CNC CMM, designed to provide top scanning performance for your largest workpieces, ready for touch trigger probe, scanning probe, optical probe, laser scanner probe.

- Improve structural rigidity gantry type construction with compensation technology
- High accuracy
- High speed and acceleration
- Temperature compensation from 18° to 22°C
- High precision glass scale with resolution 0,1 µm
- Multi-Function Joystick Box including two levers and a speed adjustment
- **Available in many different sizes from 2000 x 3000 x 1600 mm to 3000 x 5000 x 2000 mm.**

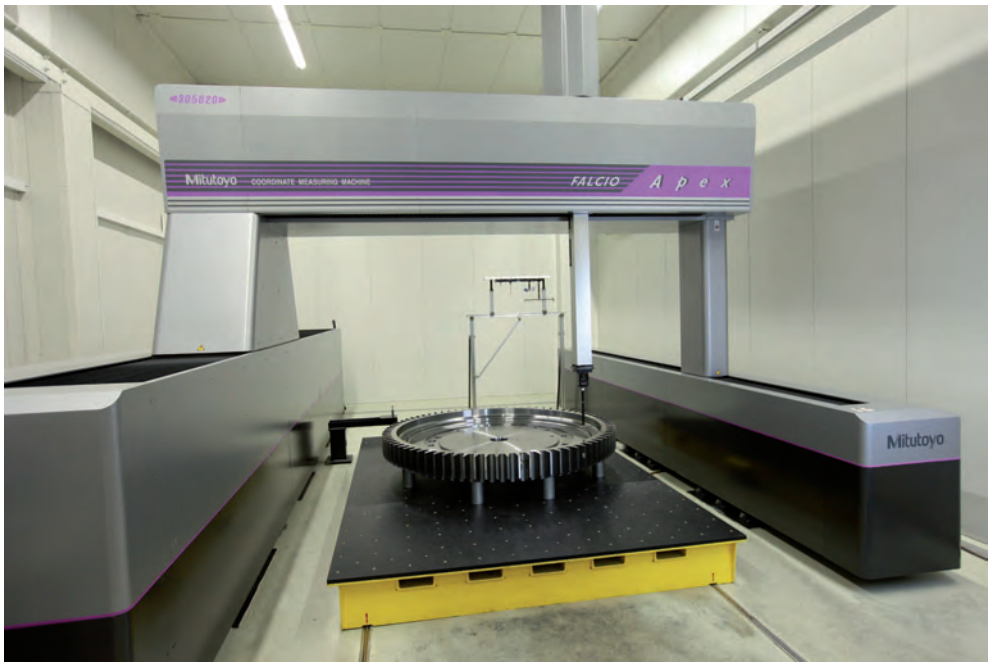

FALCIO-Apex 305020 G measuring a gear for a wind turbine engine

No.	Range [mm]	Mass [kg]
FALCIO-Apex 203015 G	2000 x 3000 x 1500	12000
FALCIO-Apex 305020 G	3000 x 5000 x 2000	16000

Specifications

Digital step	0,1 µm
Accuracy	E0, MPE from: (3,5+0,45L/100) µm
Max. drive speed	520 mm/s

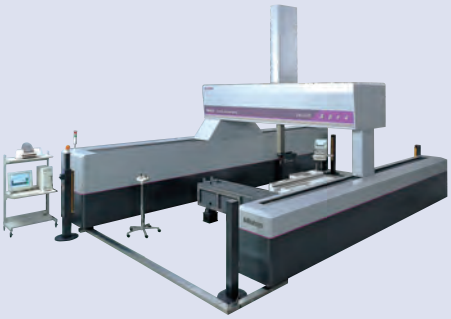

Accuracy is specified for the following environmental conditions for the CMM:*

Temperature range		18°C - 22°C
Temperature change	Per hour	1 K
	Per 24 hours	2 K
Temperature gradient	Vertical	1 K/m
	Horizontal	1 K/m

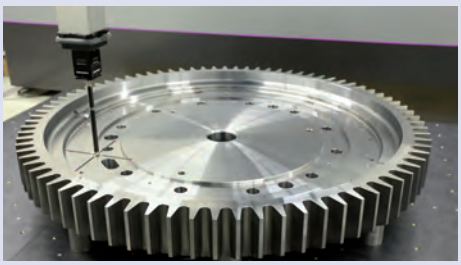

Scanning with probe SP80 and 100 mm styli.

Safety System
For this type series, Mitutoyo offers a customized safety system. Depending on the local situation in your facility, Mitutoyo will propose a tailor-made solution meeting the requirements of the Machinery Directive.

Foundation
This type series always requires a special foundation. Please contact your local Mitutoyo partner for further details.

Mitutoyo offers you over 600 styli plus highly specialised equipment for your measuring task.

All products to be sold to commercial customers. Product illustrations are without obligation. Product descriptions, in particular any and all technical specifications, are only binding when explicitly agreed upon. For suggested retail prices, please refer to the separate price list.

MACH KO-GA-ME Series

Series 357 - Agile Measurement System

- Compact in-line system
- High-speed measurements
- For scanning and touch-trigger measurements
- Ideal for single feature inspection
- Extremely Small Footprint - perfect for automated cells
- Also as stand alone solution
- Designed for production environment 10°C-35°C

Specifications

Digital step	0,02 µm
Accuracy	E0, MPE from: (2,4+0,57L/100) µm
Max. drive speed	340 mm/s
3D Acceleration	6750 mm/s²

MACH Ko-ga-me 12128-3V with optional stand

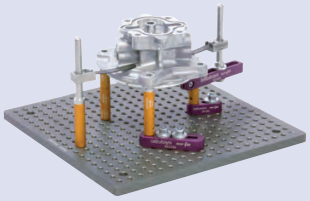

Mitutoyo eco-fix fixture kits:
- flexible & quick setup
- time & cost saving
- easy adaption of product changes

Refer to the INLINE Measuring systems brochure

Take a look how MACH Ko-ga-me can boost your productivity

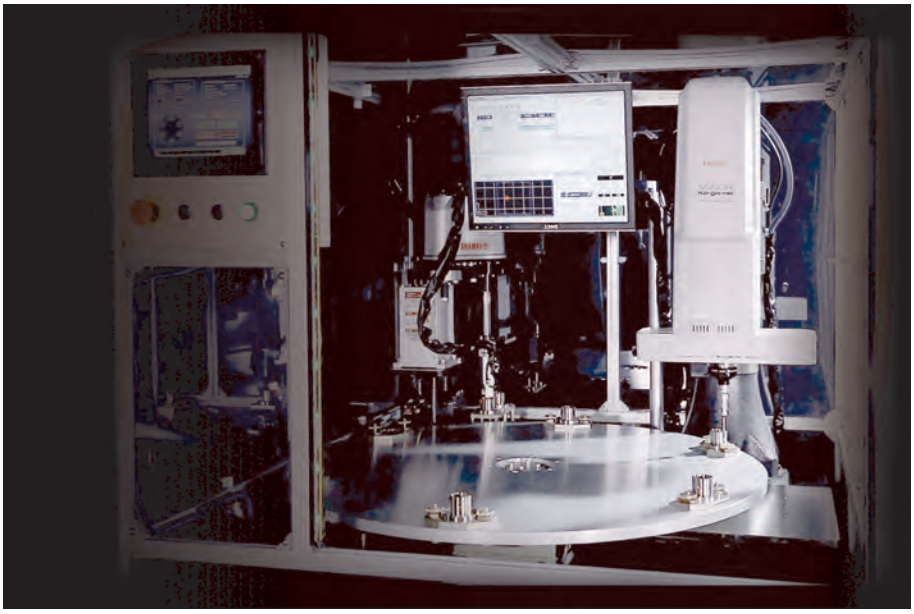

In-line Application example with MACH Ko-ga-me

MACH Ko-ga-me Models:

No.	Model	Range [mm]	Mass [kg]
357-165	12128-3V	120 x 120 x 80	36

All products to be sold to commercial customers. Product illustrations are without obligation. Product descriptions, in particular any and all technical specifications, are only binding when explicitly agreed upon. For suggested retail prices, please refer to the separate price list.

MACH-3A 653

Series 360 - High-Speed In-Line CMM

Super high speed and acceleration Production-line Coordinate Measuring Machine with horizontal spindle, designed for intensive use in hostile workshop environment.

- Super High speed and acceleration
- Drastic reduction of the measurement cycle compared with any conventional CMM
- All in One Compact design to minimize the foot print in the workshop and to improve the dust resistance
- Work piece handling and routing in the same posture as for other horizontal spindle machining centres
- Control unit and PC are installed in the dust-tight rack with heat exchanger.
- Ease-of-maintenance construction and air-free operation using high accuracy linear ball bearing
- Temperature compensation from 5°C to 40°C
- Glass scale with high resolution 0,1 µm
- Safety joystick box with deadman switch and speed adjustment
- Optional with index table for higher flexibility

No.	Model	Range [mm]
360-415-10	MACH-3A 653	600 x 500 x 280

Specifications

Digital step	0,1 µm
Accuracy	E0, MPE from: (2,2+0,35L/100) µm
Max. drive speed	1212 mm/s

Accuracy is specified for the following environmental conditions for the CMM

Temperature range		5°C - 40°C
Temperature change	per hour	2 K
	per 24 hours	10 K
Temperature gradient	Vertical	1 K/m
	Horizontal	1 K/m

Safety System
For this type series, Mitutoyo offers a customized safety system. Depending on the local situation in your facility, Mitutoyo will propose a tailor-made solution meeting the requirements of the Machinery Directive.

Refer to the INLINE Measuring systems brochure

Take a look how MACH-3A 653 can boost your productivity

All products to be sold to commercial customers. Product illustrations are without obligation. Product descriptions, in particular any and all technical specifications, are only binding when explicitly agreed upon. For suggested retail prices, please refer to the separate price list.

MACH-V 9106

Series 360 - In-line type CNC CMM

High speed and acceleration Production-line Coordinate Measuring Machine with vertical spindle, designed for intensive use in hostile workshop environment.

- Higher speed and accuracy with barycentric drive
- Improved dust resistance by installing all drive system and scale units in the dust-tight enclosure on the machine top
- Control unit and PC are installed in the dust-tight rack
- Space-saving design helps installation in a production line
- Flexible loading options due open access to the measuring area
- Ease-of-maintenance construction and air-free operation using high accuracy linear ball bearing
- Temperature compensation from 5° to 35°C
- Glass scale with high resolution 0,1 µm.

Specifications

Digital step	0,1 µm
Accuracy	E0, MPE from: (2,5+0,35L/100) µm
Max. drive speed	866 mm/s

Accuracy is specified for the following environmental conditions for the CMM*

Temperature range		5°C - 35°C
Temperature change	per hour	2 K
	per 24 hours	10 K
Temperature gradient	Vertical	1 K/m
	Horizontal	1 K/m

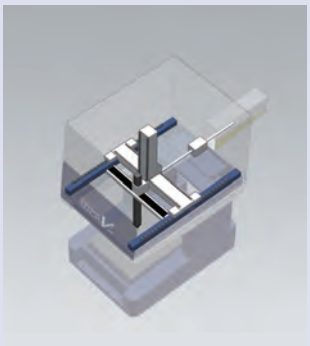

MACH-V 9106

Safety System
For this type series, Mitutoyo offers a customized safety system. Depending on the local situation in your facility, Mitutoyo will propose a tailor-made solution meeting the requirements of the Machinery Directive.

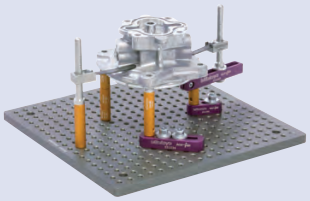

Mitutoyo eco-fix fixture kits:
- flexible & quick setup
- time & cost saving
- easy adaption of product changes

No.	Model	Range [mm]
360-224-10EU	MACH-V9106	900 x 1000 x 600

Scan QR Code with your mobile device and watch our product videos on YouTube

All products to be sold to commercial customers. Product illustrations are without obligation. Product descriptions, in particular any and all technical specifications, are only binding when explicitly agreed upon. For suggested retail prices, please refer to the separate price list.

CMM Probes

SURFTEST Probe

Surface Roughness Measurement directly on the CMM!

This latest Mitutoyo probe head closes the gap between typical dimensional CMM measurements and surface roughness inspection. Instead of having to take the workpiece to another measuring instrument or using additional portable systems, the SURFTEST Probe adds roughness measurement capability to your CMM and so avoids all the cost and inconvenience of additional systems. It brings the proven technology of the SJ-310 series to the CMM with all its highly capable range of detectors developed for handling specialist applications such as roughness measurement on gears, inside small holes or deep grooves, in addition to simple flat surface measuring tasks.

- Proven technology from Mitutoyo's SJ-310 Surftest
- Chose from five types of detector for variant applications
- High accuracy – no CMM movement during measurement
- One CNC measurement cycle produces all results
- Graphical and numerical output
- One Measurement report for all GD&T requirements

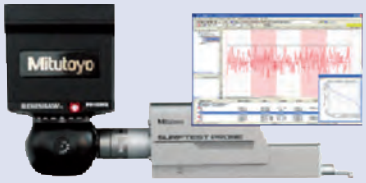

SURFTEST Probe

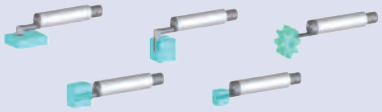

Optional detectors

Scan QR Code with your mobile device and watch our product videos on YouTube

SurfaceMeasure

Mitutoyo's Laser Line Scanning Probe

- Suitable for inspection by CAD comparison and reverse engineering purposes.
- Autojoint mounting compatible with PH10M/MQ and automatic probe change racks.
- Automatic laser intensity and camera sensitivity adjustment according to the surface texture.
- Powder-sprayless measurement even for glossy or multiple colors surfaces.
- High Speed Scanning by High Acquisition rate of 75000 points/sec (1000 points/line).
- Scanning uncertainty: 12 µm.
- Maximum scanning width: 60 mm.
- Working Distance: 93 mm.

SurfaceMeasure

QVP

Mitutoyo's Vision Probe System for CMMs

- Fast optical measurements – the perfect choice for small features and soft materials
- Ideal in combination with tactile probes
- Prepared for automatic probe change
- Four objective lenses offer different optical magnification
- From 0,375 x to 3,75 x
- White LED ring light
- White LED coaxial light

QVP (Quick Vision Probe)

All products to be sold to commercial customers. Product illustrations are without obligation. Product descriptions, in particular any and all technical specifications, are only binding when explicitly agreed upon. For suggested retail prices, please refer to the separate price list.

CMM Probes

MPP-310Q

MPP-310Q

Ultra-High Precision Scanning Probe

- High resolution of 0,01 µm
- Measuring range ±1 mm
- Extremely low measuring forces of 0,03 N
- Styli length up to 200 mm
- Air bearing for smooth measurements
- Axis clamping for scanning on slanted or arched surfaces

PH20

PH20

Rapid tactile measurements at any probe angle

- Head touch for improved repeatability
- Feature-based calibration for improved accuracy
- Probe change with TP20 moduls
- Allowing subsequent measurement at any head angle
- Full support in MCOSMOS

Revo

Revo

5-axis measurement technology

- Rapid scanning at any angle
- dynamic 2-axis head provides most of the stylus motion
- High accuracy and repeatability
- Scanning with 5-axes of simultaneous motion allows unparalleled measurement flexibility
- 'Head-touches' take measurement points faster, with improved accuracy and repeatability
- 5-axis motion eliminates time spent indexing the head

Refer to the Measuring Heads brochure

5-axis scanning options with CRYSTA-Apex and Revo

All products to be sold to commercial customers. Product illustrations are without obligation. Product descriptions, in particular any and all technical specifications, are only binding when explicitly agreed upon. For suggested retail prices, please refer to the separate price list.

CMM Probes

Scanning probe systems

SP80

SP25M

SP600M

Touch-trigger probe systems

TP7M
High accuracy type

TP200
Compact and high accuracy (stylus change type)

SCR200
Rack

Micro Touch Probe
UMAP-CMM

TP20
Compact type

MCR20
Rack

MH20i / MH20
Manual Probes

Probe heads

PH10M
Motor drive index type

MIH
Manual index type

PH1
Simple manual type

CMM Probes brochure on demand

All products to be sold to commercial customers. Product illustrations are without obligation. Product descriptions, in particular any and all technical specifications, are only binding when explicitly agreed upon. For suggested retail prices, please refer to the separate price list.

Styli Kits

Mitutoyo offers you over 600 styli plus highly specialised equipment within a wide range of selected materials like steel, aluminium, ceramics, ruby, zirconium oxide or silicon nitride.

Styli Kit M2 Addition

Styli Kit M2 Addition

No.	Contents	Description	Length [mm]
K651382	1x Part No. K651058	5-way stylus holder M2	7,5
	1x Part No. K651040	Extension steel M2	30
	1x Part No. K651039	Extension steel M2	20
	4x Part No. K651038	Extension steel M2	10
	1x Part No. K651022	Stylus steel-ruby M2	20
	1x Part No. K651021	Stylus steel-ruby M2	20
	5x Part No. K651019	Stylus steel-ruby M2	20
	1x Part No. K651012	Stylus steel-ruby M2	10
	2x Part No. K651223	Pin spanner ø 1,2 mm	23

Styli Kit M2 Basic 1

Styli Kit M2 Basic 1

No.	Contents	Description	Length [mm]
K651377	1x Part No. K651012	Stylus steel-ruby M2	10
	1x Part No. K651014	Stylus steel-ruby M2	10
	1x Part No. K651019	Stylus steel-ruby M2	20
	1x Part No. K651016	Stylus steel-ruby M2	10
	1x Part No. K651021	Stylus steel-ruby M2	20
	1x Part No. K651022	Stylus steel-ruby M2	20
	1x Part No. K651031	Cylinder stylus steel M2	13
	1x Part No. K651062	Adaptor M2	7
	1x Part No. K651054	5-way stylus M2	30
	1x Part No. K651083	Disk stylus steel M2	7,5
	1x Part No. K651085	Disk stylus steel - ruby M2	10
	1x Part No. K651038	Extension steel M2	10
	1x Part No. K651039	Extension steel M2	20
	2x Part No. K651223	Pin spanner ø 1,2 mm	23

Styli Kit M2 Basic 2

Styli Kit M2 Basic 2

No.	Contents	Description	Length [mm]
K651354	1x Part No. K651235	Stylus tungsten carbide-ruby M2	20
	1x Part No. K651249	Stylus tungsten carbide-ruby M2	20
	1x Part No. K651019	stylus steel-ruby M2	20
	1x Part No. K651347	Stylus carbon fiber-ruby M2	50
	1x Part No. K651348	Stylus carbon fiber-ruby M2	50
	1x Part No. K651349	Stylus carbon fiber-ruby M2	50
	1x Part No. K651350	Stylus extension CRP M2	40
	1x Part No. K651351	Stylus extension CRP M2	50
	1x Part No. K651352	Stylus extension CRP M2	70
	1x Part No. K651353	Stylus extension CRP M2	90
	1x Part No. K651058	5-way stylus holder M2	7,5
	1x Part No. K651223	pin spanner ø 1,2 mm	

Styli Kit M2 Expansion

Styli Kit M2 Expansion

No.	Contents	Description	Length [mm]
K651378	1x Part No. K651236	Stylus tungsten carbide-ruby M2	10
	1x Part No. K651248	Stylus tungsten carbide-ruby M2	20
	2x Part No. K651257	Stylus tungsten carbide-ruby M2	30
	1x Part No. K651233	Stylus tungsten carbide-ruby M2	10
	1x Part No. K651276	Stylus tungsten carbide-ruby M2	10
	1x Part No. K651012	Stylus steel-ruby M2	10
	1x Part No. K651013	Stylus steel-ruby M2	10
	1x Part No. K651014	Stylus steel-ruby M2	10
	1x Part No. K651015	Stylus steel-ruby M2	10
	2x Part No. K651020	Stylus steel-ruby M2	20
	1x Part No. K651032	Cylinder stylus-ruby M2	20
	1x Part No. K651052	4-way stylus-ruby M2	10
	1x Part No. K651098	Tip stylus tungsten carbide M2	10
	1x Part No. K651083	Disk stylus steel M2	7,5
	1x Part No. K651084	Disk stylus steel M2	7,5
	1x Part No. K651041	Extension steel M2	40
	2x Part No. K651223	Pin spanner ø 1,2 mm	23

All products to be sold to commercial customers. Product illustrations are without obligation. Product descriptions, in particular any and all technical specifications, are only binding when explicitly agreed upon. For suggested retail prices, please refer to the separate price list.

Styli Kits

Styli Kit M2 Professional

No.	Contents	Description	Length [mm]
K651379	1x Part No. K651236	Stylus tungsten carbide-ruby M2	10
	1x Part No. K651248	Stylus tungsten carbide-ruby M2	20
	1x Part No. K651233	Stylus tungsten carbide-ruby M2	10
	2x Part No. K651276	Stylus tungsten carbide-ruby M2	10
	2x Part No. K651012	Stylus steel-ruby M2	10
	1x Part No. K651013	Stylus steel-ruby M2	10
	3x Part No. K651014	Stylus steel-ruby M2	10
	5x Part No. K651019	Stylus steel-ruby M2	20
	1xPart No. K651015	Stylus steel-ruby M2	10
	2xPart No. K651020	Stylus steel-ruby M2	20
	1x Part No. K651016	Stylus steel-ruby M2	10
	2x Part No. K651021	Stylus steel-ruby M2	20
	3x Part No. K651017	Stylus steel-ruby M2	10
	3x Part No. K651022	Stylus steel-ruby M2	20
	2x Part No. K651018	Stylus steel-ruby M2	10
	2x Part No. K651024	Stylus steel-ruby M2	10
	1x Part No. K651025	Stylus steel-ruby M2	11
	1x Part No. K651030	Cylinder stylus steel M2	11
	1x Part No. K651031	Cylinder stylus steel M2	13
	1x Part No. K651032	Cylinder stylus steel M2	20
	1x Part No. K651062	Adaptor M2	7
	1x Part No. K651052	4-way stylus-ruby M2	10
	1x Part No. K651053	5-way stylus-ruby M2	18
	1xPart No. K651054	5-way stylus-ruby M2	30
	1xPart No. K651097	Tip stylus steel M2	15
	1xPart No. K651098	Tip stylus tungsten carbide M2	10
	1x Part No. K651083	Disk stylus steel M2	7,5
	1x Part No. K651084	Disk stylus steel M2	7,5
	1xPart No. K651085	Disk stylus steel - ruby M2	10
	1xPart No. K651090	Hollow ball ceramic M2	11
	1xPart No. K651058	5-way stylus holder M2	7,5
	4xPart No. K651037	Extension steel M2	5
	2x Part No. K651038	Extension steel M2	10
	2x Part No. K651039	Extension steel M2	20
	2xPart No. K651040	Extension steel M2	30
	2x Part No. K651041	Extension steel M2	40
	2x Part No. K651223	Pin spanner ø 1,2 mm	23

Styli Kit M2 Starter

No.	Contents	Description	Length [mm]
K651376	1x Part No. K651012	Stylus steel-ruby M2	10
	1x Part No. K651019	Stylus steel-ruby M2	20
	1x Part No. K651021	Stylus steel-ruby M2	20
	1x Part No. K651022	Stylus steel-ruby M2	20
	1x Part No. K651038	Extension steel M2	10
	1x Part No. K651039	Extension steel M2	20
	2x Part No. K651223	Pin spanner ø 1,2 mm	23

Styli Kit M3 CRP 1

No.	Contents	Description	Length [mm]
K651318	1x Part No. K651297	Stylus carbon fiber-ruby M3	21
	1x Part No. K651298	Stylus carbon fiber-ruby M3	21
	1x Part No. K651301	Stylus carbon fiber-SiNi M3	21
	1x Part No. K651299	Stylus carbon fiber-ruby M3	31
	1x Part No. K651300	Stylus carbon fiber-ruby M3	40
	1x Part No. K651303	Stylus carbon fiber-ruby M3	50
	1x Part No. K651223	pin spanner ø 1,2 mm	

Styli Kit M3 CRP 2

No.	Contents	Description	Length [mm]
K651319	1x Part No. K651302	Stylus carbon fiber-ruby M3	21
	1x Part No. K651304	Stylus carbon fiber-ruby M3	21
	1x Part No. K651303	Stylus carbon fiber-ruby M3	50
	1x Part No. K651306	Stylus carbon fiber-ruby M3	50
	1x Part No. K651305	Stylus carbon fiber-ruby M3	75
	1x Part No. K651223	Pin spanner ø 1,2 mm	

Styli Kit M2 Professional

Styli Kit M2 Starter

Styli Kit M3 CRP 1

Styli Kit M3 CRP 2

All products to be sold to commercial customers. Product illustrations are without obligation. Product descriptions, in particular any and all technical specifications, are only binding when explicitly agreed upon. For suggested retail prices, please refer to the separate price list.

Styli Kits

Styli Kit M3 Basic

Styli Kit M3 Basic

No.	Contents	Description	Length [mm]
K651381	1x Part No. K651170	Adaptor steel M3	5
	1x Part No. K651146	Stylus steel-ruby M3	21
	5x Part No. K651147	Stylus steel-ruby M3	21
	1x Part No. K651148	Stylus steel-ruby M3	21
	3x Part No. K651151	Stylus steel-ruby M3	31
	1x Part No. K651152	Stylus steel-ruby M3	33,5
	1x Part No. K651169	5-way stylus holder M3	13
	1x Part No. K651180	swivel steel M3	11,5
	1x Part No. K651172	disc stylus M3	33
	1x Part No. K651174	disc stylus M3	7,5
	1x Part No. K651157	extension steel M3	20
	1x Part No. K651159	extension steel M3	35
	2x Part No. K651223	Pin spanner ø 1,2 mm	23
	1x Part No. K650135	hexagonal screwdriver	

Styli Kit M3 CRP 3

Styli Kit M3 CRP 3

No.	Contents	Description	Length [mm]
K651320	1x Part No. K651302	Stylus carbon fiber-ruby M3	21
	1x Part No. K651304	Stylus carbon fiber-ruby M3	21
	1x Part No. K651303	Stylus carbon fiber-ruby M3	50
	1x Part No. K651306	Stylus carbon fiber-ruby M3	75
	1x Part No. K651305	Stylus carbon fiber-ruby M3	100
	1x Part No. K651223	Pin spanner ø 1,2 mm	

Styli Kit M3 Starter

Styli Kit M3 Starter

No.	Contents	Description	Length [mm]
K651380	1x Part No. K651146	Stylus steel-ruby M3	21
	1x Part No. K651147	Stylus steel-ruby M3	21
	1x Part No. K651148	Stylus steel-ruby M3	21
	1x Part No. K651151	Stylus steel-ruby M3	31
	1x Part No. K651152	Stylus steel-ruby M3	33,5
	1x Part No. K651157	extension steel M3	20
	1x Part No. K651159	extension steel M3	35
	2x Part No. K651223	Pin spanner ø 1,2 mm	23

Styli Kit M4

Styli Kit M4

No.	Contents	Description	Length [mm]
K651383	1x Part No. K651184	Stylus ceramic-ruby M4	100
	1x Part No. K651182	Stylus ceramic-ruby M4	50
	1x Part No. K651216	Adaptor ceramic M4/M3	100
	1x Part No. K651215	Adaptor ceramic M4/M3	75
	1x Part No. K651214	Adaptor ceramic M4/M3	50
	1x Part No. K651204	extension ceramic M4	50
	1x Part No. K651203	extension ceramic M4	30
	1x Part No. K651170	Adaptor M3/M2	5
	1x Part No. K651208	Adaptor M4/M3	9
	2x Part No. K650346	Pin spanner	49
	2x Part No. K651223	Pin spanner	23
	1x Part No. K651058	5-way stylus holder M2	7,5
	1x Part No. K651169	5-way stylus holder M3	13
	1x Part No. K651206	5-way stylus holder M4	18
	1x Part No. K651186	Stylus steel-ruby M4	19,5
	4x Part No. K651187	Stylus steel-ruby M4	19
	1x Part No. K651188	Stylus steel-ruby M4	18

All products to be sold to commercial customers. Product illustrations are without obligation. Product descriptions, in particular any and all technical specifications, are only binding when explicitly agreed upon. For suggested retail prices, please refer to the separate price list.

Mitutoyo

CMM Fixtures

CMM Fixtures

Mitutoyo offers you the full range of CMM equipment from the machine itself to probe systems, software up to clamping systems.
The Fixture series "eco-fix" offer you:
- a quick, easy & flexible way to create fixtures,
- practice-oriented modular concept,
- time and cost-saving way to buit fixtures,
- easy adaption of product changes to the fixtures,
- leight-weight aluminium parts,
- strong, hardcoated and anodised parts for long life under rough conditions.

eco-fix Kit S

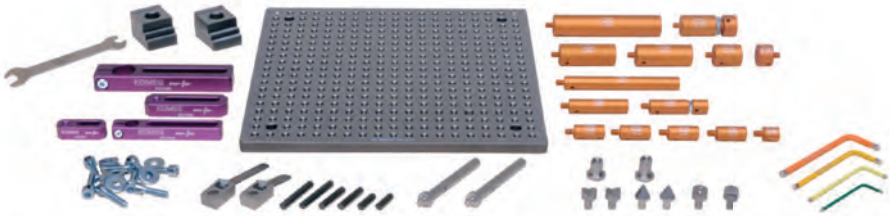

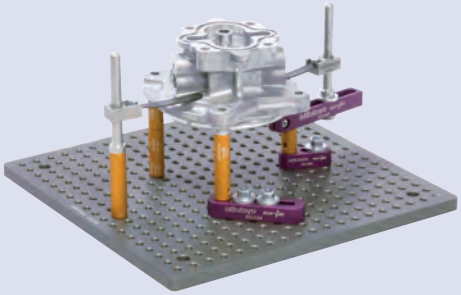

For prismatic parts
- **59 parts,**
- **Base plate 250x250mm,**
- **M6 threats in a grid of 50x50mm,**
- **Location pins 25-100mm,**
- **Stopper elements,**
- **Back squares,**
- **Cone receiver,**
- **V-Blocks,**
- **Spring clips**

No.
K551048

eco-fix Kit Mag S

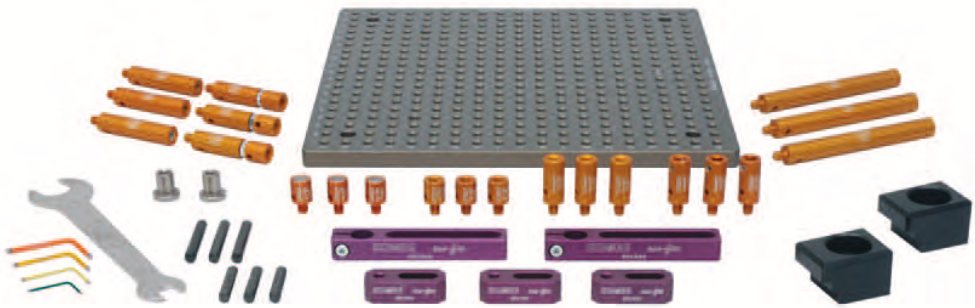

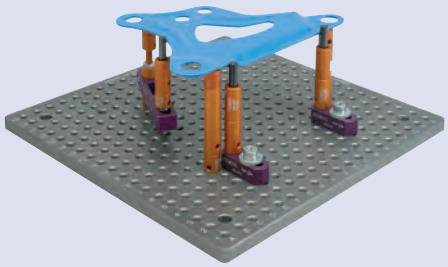

For magnetic parts – ideal for shett-metal
- **70 parts,**
- **Base plate 250x250mm,**
- **M6 threats in a grid of 50x50mm,**
- **Location pins 25-100mm,**
- **Magnetic receivers**

No.
K551089

All products to be sold to commercial customers. Product illustrations are without obligation. Product descriptions, in particular any and all technical specifications, are only binding when explicitly agreed upon. For suggested retail prices, please refer to the separate price list.

CMM Fixtures

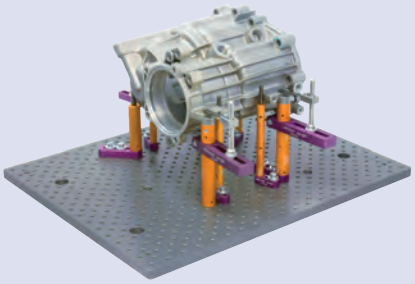

eco-fix Kit L

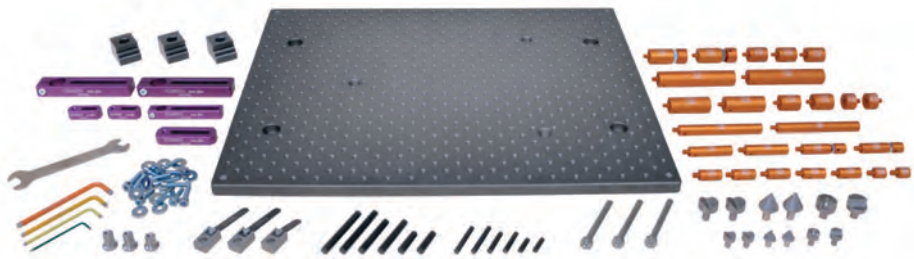

For prismatic parts
- 98 parts,
- Base plate 500x400mm,
- M6 threats in a grid of 50x50mm,
- Location pins 25-100mm,
- Stopper elements,
- Back squares,
- Cone receiver,
- V-Blocks,
- Spring clips

No.
K551049

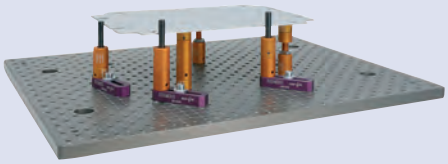

eco-fix Kit Mag L

For magnetic parts – ideal for shett-metal
- 79 parts,
- Base plate 500x400mm,
- M6 threats in a grid of 50x50mm,
- Location pins 25-100mm,
- Magnetic receivers

No.
K551090

All products to be sold to commercial customers. Product illustrations are without obligation. Product descriptions, in particular any and all technical specifications, are only binding when explicitly agreed upon. For suggested retail prices, please refer to the separate price list.

CMM Fixtures

eco-fix Kit quick-rail

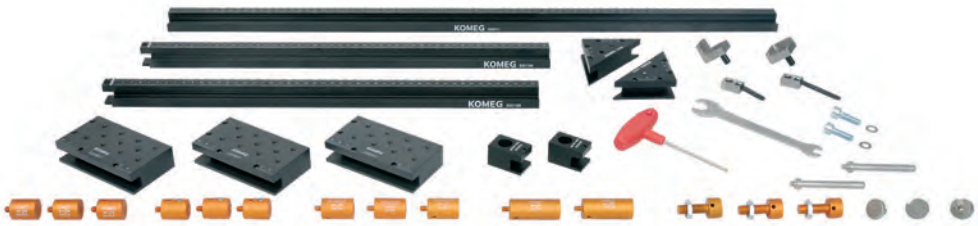

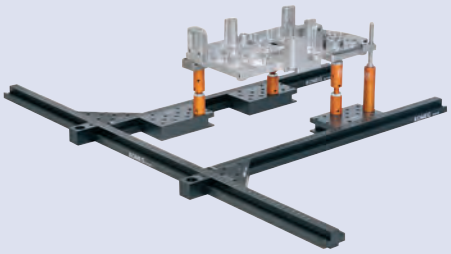

The perfect system for a big variation of parts

- **3 rails**
- **1 rail with 800mm length, fixed to CMM**
- **2 rails 500mm for flexible positioning of rail and base plates**
- **Location pins 25-100mm,**
- **Stopper elements,**
- **Back squares,**
- **Spring clips,**

See how fast & easy eco-fix offers a clamping solution for your workpieces

No.
K550914

VARI-FIX

- flexible RST profiles
- fully height-adjustable
- rotative parts allow 360° positioning
- combinable with all eco-fix parts

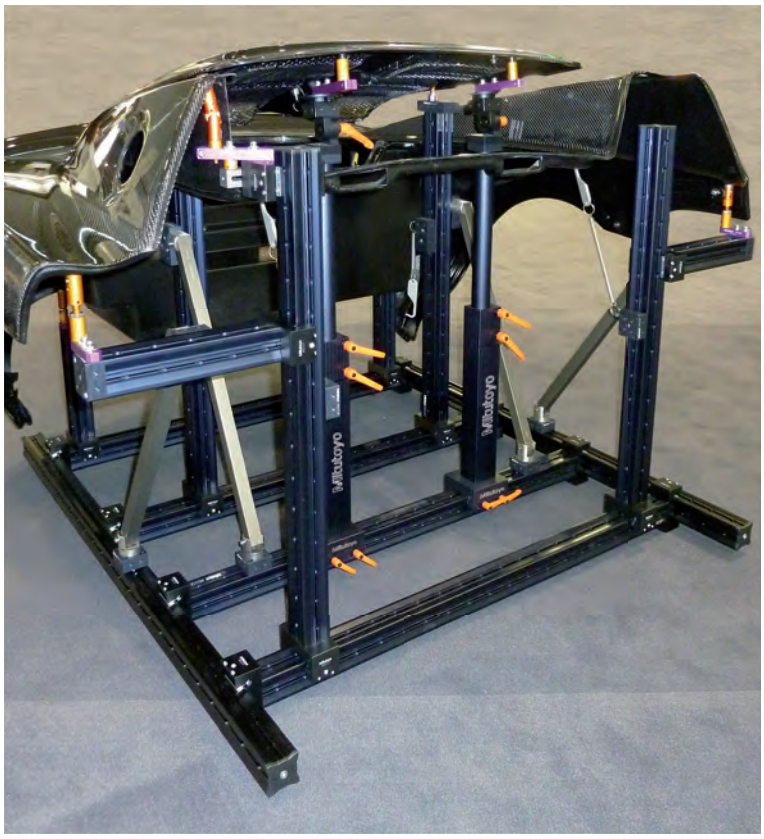

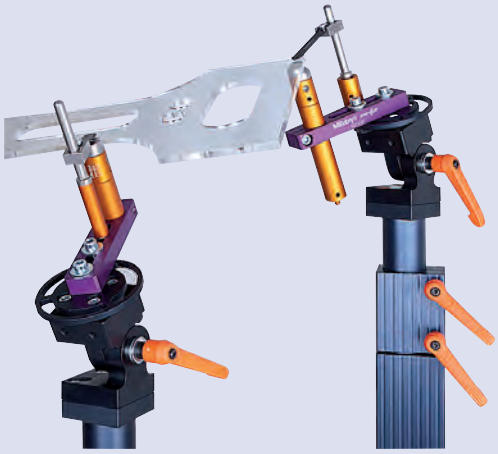

All products to be sold to commercial customers. Product illustrations are without obligation. Product descriptions, in particular any and all technical specifications, are only binding when explicitly agreed upon. For suggested retail prices, please refer to the separate price list.

CMM Enclosures

Protect your investment for contamination, improve reliability of measurements and reduce maintenance costs. Mitutoyo's Inspection Enclosures are designed to help keep your CMMs and instruments free of airborne contamination.

Features and benefits:
- Standard fans create positive pressure inside the enclosure to exclude airborne contaminants, increase reliability of measurements and reduce CMM maintenance costs.
- Air-conditioning option is available to add temperature control to the clean air environment.
- Enclosed volume provides greatly improved working conditions for intricate inspection operations.
- Double doors fold back enabling easy access for part loading.
- Modular Design with removable panels enables easy construction around existing machines, straightforward relocation (if required) and assists in annual CMM servicing.
- Enclosures are robustly built to whitstand the demands of a busy shopfloor manufacturing facility.
- Transparent, polycarbonate, easy-clean panels pass sufficient light for normal use and are shatterproof, tough and durable.
- Clean, functional design enhances the appearance of your CMMs.

Technical details:
- Framework fabricated from extruded aluminium.
- Lower panels made from PVC - available in a variety of colours
- Upper panels in clear polycarbonate.

All products to be sold to commercial customers. Product illustrations are without obligation. Product descriptions, in particular any and all technical specifications, are only binding when explicitly agreed upon. For suggested retail prices, please refer to the separate price list.

Manual 2D Vision Measuring Systems Quick Image
Page 587

Manual and CNC Vision Measuring Systems Quick Scope
Page 589

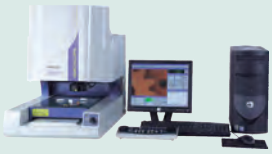

3D CNC Vision Measuring Systems Quick Vision
Page 593

3D CNC Multisensor Measuring Systems Quick Vision
Page 599

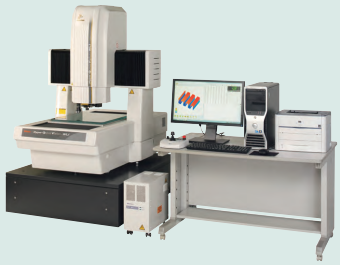

3D CNC Measuring Sysems for Micro Geometries
Page 603

Software for Quick Vision Systems
Page 606

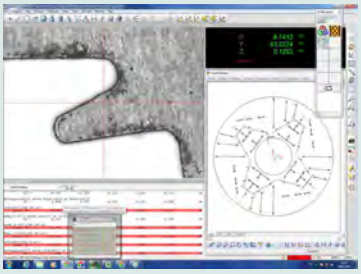

Accessories for Vision Systems
Page 608

All products to be sold to commercial customers. Product illustrations are without obligation. Product descriptions, in particular any and all technical specifications, are only binding when explicitly agreed upon. For suggested retail prices, please refer to the separate price list.

Quick Image

Series 361

The ultimate in simple operation with **one click measurement.**
This non-contact 2D vision measuring system brings you a new concept in 2D vision measuring instruments. It offers several unique features to improve the efficiency of your measurements, including:

- Long focal depth and wide field of view.
- Double telecentric optical system.
- 3Mega-pixel colour camera.
- Four-quadrant LED ring light.
- Motorized stage models provide highest measurement efficiency.

QI-A2010C

QI-B4020C

Specifications

Measuring Mode	High-resolution mode and Normal mode
Optical system working distance	90 mm
Optical system depth of focus	**High-resolution mode** : ±0,6 mm (QI-A and B) **Normal mode** : ±11 mm (QI-A) ±1,8 mm (QI-B)
Accuracy [1]	$U_{1(x,y)}$ = ±(3,5+0,02L) µm **L** = measured length (mm) [1]According to Mitutoyo inspection method
Optical system magnification	**QI-A models** : 0,2X **QI-B models** : 0,5X
CCD camera	3 Megapixels colour CCD camera
Illumination	- Contour LED - Coaxial LED - 4-quadrant LED ring light

Optional accessories

No.	Description
937179T.	Footswitch
12AAJ088.	Reinfor ced footswitch

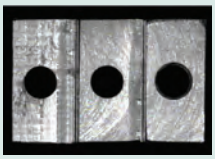

Image of a stepped block using the double telecentric objective showing the orthographic view produced.

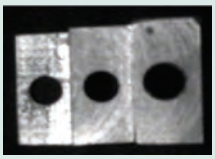

Image of the same object using a standard objective

Refer to the Quick Image brochure

QI-A models

Model	QI-A1010C	QI-A2010C	QI-A2017C	QI-A3017C	QI-A4020C
No.	**361-840A**	**361-841A**	**361-842A**	**361-843A**	**361-844A**
Travelling range X-, Y-axis [mm]	100 x 100	200 x 100	200 x 170	300 x 170	400 x 200
Travelling range Z-axis [mm]	100	100	100	100	100
Stage glass size [mm]	170 x 170	242 x 140	260 x 230	360 x 230	440 x 232
Max. stage loading kg	10	10	20	20	15
Mass kg	70	74	140	148	154

QI-B models

Model	QI-B1010C	QI-B2010C	QI-B2017C	QI-B3017C	QI-B4020C
No.	**361-845A**	**361-846A**	**361-847A**	**361-848A**	**361-849A**
Travelling range X-, Y-axis [mm]	100 x 100	200 x 100	200 x 170	300 x 170	400 x 200
Travelling range Z-axis [mm]	100	100	100	100	100
Stage glass size [mm]	170 x 170	242 x 140	260 x 230	360 x 230	440 x 232
Max. stage loading kg	10	10	20	20	15
Mass kg	70	74	140	148	154

Field of view with QI-A 0.2X magnification

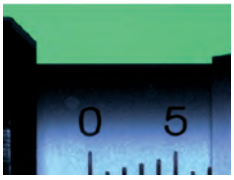

Field of view with QI-B 0.5X magnification

All products to be sold to commercial customers. Product illustrations are without obligation. Product descriptions, in particular any and all technical specifications, are only binding when explicitly agreed upon. For suggested retail prices, please refer to the separate price list.

Software for Quick Image Systems

QIPAK

- One click measurement with QUICK GO / NG decision
- Single mouse-click edge-detection tools; very easy to use.
- Template tools for comparative analysis.
- Video image capture.
- Stage navigation function gives improved measurement cycles.
- Image stitching provides wide area measurement.

No.	Type
QIPAK	Software for Quick Image Systems

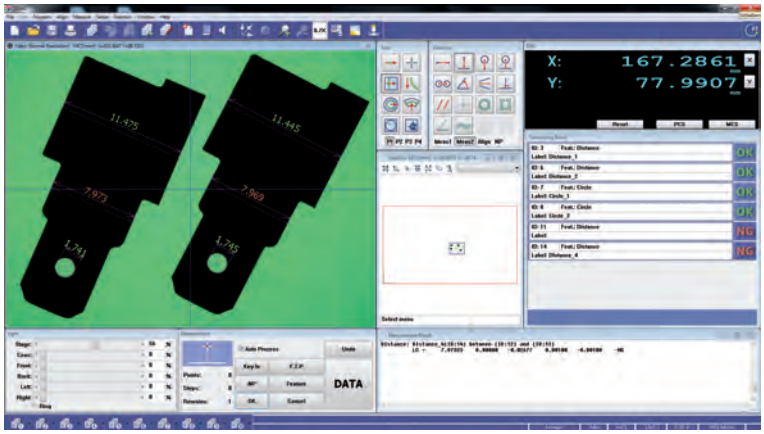

Example 1 screen layout QIPAK

Example 2 screen layout QIPAK

Specifications

QIPAK Additional software (optional)	MEASURLINK (refer to the Measurlink page) QS CAD-IMPORT/EXPORT FORMTRACEPAK-AP (1)

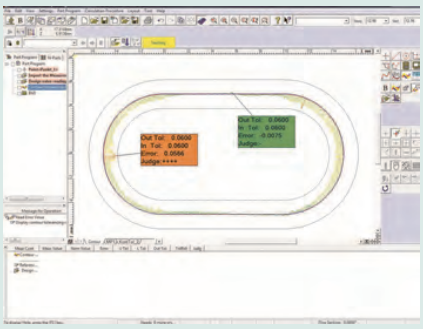

(1) FORMTRACEPAK-AP

Simple and easy-to-use 2D contour analysis.
Graphic reports (geometry or scanning) edition.
Allows measurement by comparison.
For more information refer to FORMTRACEPAK-AP.

All products to be sold to commercial customers. Product illustrations are without obligation. Product descriptions, in particular any and all technical specifications, are only binding when explicitly agreed upon. For suggested retail prices, please refer to the separate price list.

Manual Quick Scope QS-L Series

Series 359

This manual vision measuring system is an excellent surface observation system which you can use on a wide variety of workpieces.
The Quick Scope offers you the following benefits:

- 0,1 µm resolution and 150 mm Z-axis range.
- Power zoom enabling you to change magnification change quickly and easily.
- Fine illumination capability enabling you to change lighting to match your workpiece requirements.
- A quick release system on the stage, so you can switch instantly between coarse and fine movement.
- Quick navigation function allowing you to repeat measurements quickly.
- An auto-focus function available for QS-L AFB models.

Specifications

Accuracy[1]	$E_{1(x,y)}$= (2,5+2L/100) µm L=measured length (mm) [1]According to Mitutoyo inspection method
Illumination	- Contour - Coaxial - Ring Light

Optional accessories

No.	Description
937179T.	Footswitch
12AAJ088.	Reinfor ced footswitch
02ATN695.	Calibration chart with holder

Refer to the Optical Accessories page for Quick Scope / Quick Vision for more information on calibration charts.

Quick Scope brochure on request

QS-L 2010 Zoom AF

QS-L 2010 models
- Range : 200 x 100 x 150 mm

Type	QS-L Zoom	QS-L Zoom AF
No.	**359-710-1D**	**359-703D**
Sensor type	Colour CMOS 3 Megapixels	Colour CCD
AF (motorized Z-axis)	-	Yes
Objective lens	Zoom type	Zoom type
Magnification (optical system)	0,75X -> 5,25X	0,5X -> 3,5X
Magnification on screen (56 cm / 22" inch monitor)	29X -> 202X	26X -> 180X
Z-axis measurement	Manual with software assisted contrast level	Motorized with AF
Max. stage loading kg	10	10
Mass kg	72	66

QS-L 3017 models
- Range : 300 x 170 x 150 mm

Type	QS-L Zoom	QS-L Zoom AF
No.	**359-711-1D**	**359-704D**
Sensor type	Colour CMOS 3 Megapixels	Colour CCD
AF (motorized Z-axis)	-	Yes
Objective lens	Zoom type	Zoom type
Magnification (optical system)	0,75X -> 5,25X	0,5X -> 3,5X
Magnification on screen (56 cm / 22" inch monitor)	29X -> 202X	26X -> 180X
Z-axis measurement	Manual with software assisted contrast level	Motorized with AF
Max. stage loading kg	20	20
Mass kg	140	134

All products to be sold to commercial customers. Product illustrations are without obligation. Product descriptions, in particular any and all technical specifications, are only binding when explicitly agreed upon. For suggested retail prices, please refer to the separate price list.

Manual Quick Scope QS-L Series

QS-L 4020 models
- Range : 400 x 200 x 150 mm

Type	QS-L Zoom	QS-L Zoom AF
No.	**359-712-1D**	**359-705D**
Sensor type	Colour CMOS 3 Megapixels	Colour CCD
AF (motorized Z-axis)	-	Yes
Objective lens	Zoom type	Zoom type
Magnification (optical system)	0,75X -> 5,25X	0,5X -> 3,5X
Magnification on screen (**56 cm** / 22" inch monitor)	29X -> 202X	26X -> 180X
Z-axis measurement	Manual with software assisted contrast level	Motorized with AF
Max. stage loading kg	15	15
Mass kg	146	140

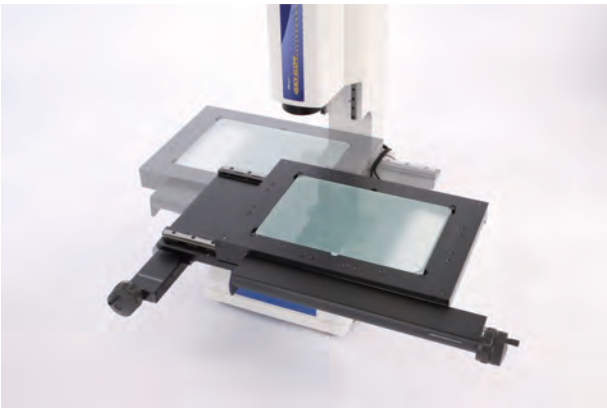

Stage with quick release mechanism

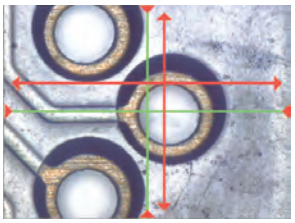

Guided stage navigation for repeat measurements Step 1: Not in position

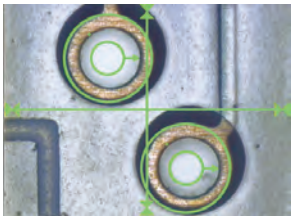

Guided stage navigation for repeat measurements Step 2: In position

All products to be sold to commercial customers. Product illustrations are without obligation. Product descriptions, in particular any and all technical specifications, are only binding when explicitly agreed upon. For suggested retail prices, please refer to the separate price list.

CNC Quick Scope QS Series

Series 359

With this CNC vision measuring system you can meet a variety of measurement needs.
The Quick Scope offers you the following benefits:

- You can configure the QS lighting for different measurement needs thanks to the surface, contour and fibre-optic ring light illumination.
- The powerful, Windows® based QSPAK software is easy to use and offers you a wide spectrum of measuring and analysis capabilities.
- You can make use of a range of functions including zoom, auto-focus, part program generation, one-click edge detection, graphic display, 48 different macros and a pattern matching function for several common part features.
- You can control the stage with your mouse, through the optional joystick box or the multi-function control box.

QS-250 Zoom CNC

Specifications

Illumination	- Contour - Coaxial - Ring Light

Optional accessories

No.	Description
937179T.	Footswitch
12AAJ088.	Reinfor ced footswitch
02ATD415.	Joystick XYZ
02APW610.	Control Box 2
02AKN020.	Calibration chart

Refer to the Optical Accessories page for Quick Scope / Quick Vision for more information on calibration charts.

Control box 2

Joystick XYZ

Quick Scope brochure on request

QS-250Z

Type	QS-250 Zoom
No.	**359-508-10Y**
Range (X, Y, Z-axis) with Vision Head	200 x 250 x 100 mm
Accuracy(1)	$E_{1(x,y)}$= (2,5+0,6L/100) µm L=measured length (mm)
Sensor type	Colour CCD
Resolution µm	0,1
Objective lens	Zoom type
Magnification (optical system)	0,5X -> 3,5X
Magnification on screen (56cm / 22" inch monitor)	26X -> 180X
AF (motorized Z-axis)	Yes
Stage glass size [mm]	269 x 311
Z-axis measurement	Motorized with AF
Max. stage loading kg	10
Mass kg	76

(1)According to Mitutoyo inspection method

All products to be sold to commercial customers. Product illustrations are without obligation. Product descriptions, in particular any and all technical specifications, are only binding when explicitly agreed upon. For suggested retail prices, please refer to the separate price list.

Software for Quick Scope Systems

QSPAK

- Easy to use, single mouse-click edge-detection tools
- Template tools for comparative analysis.
- Video image capture.
- Stage navigation function for CNC machines giving you improved measurement cycles.

No.	Type
QSPAK	Software for Quick Scope systems

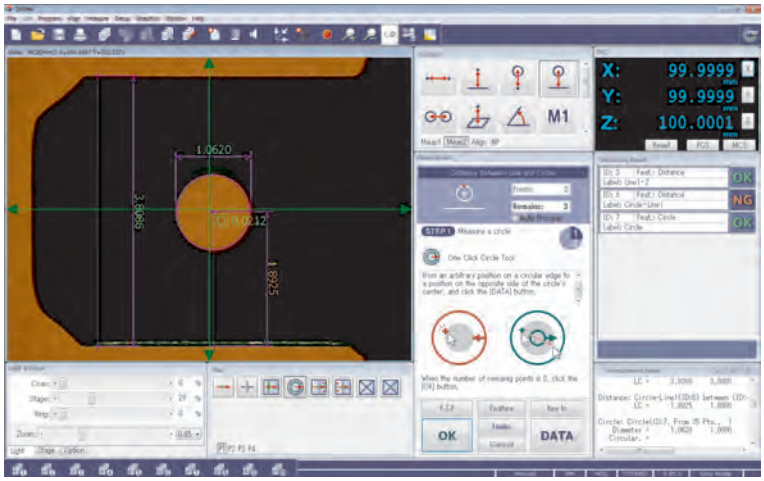

QSPAK Layout: Easy mode

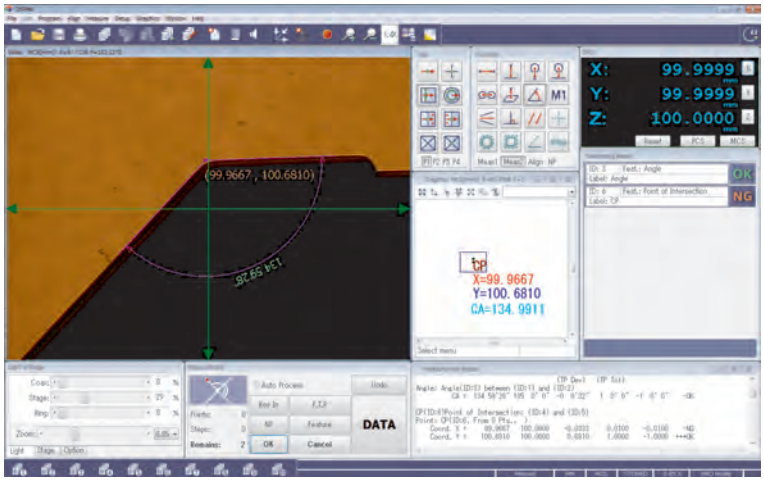

QSPAK Layout: Pro mode

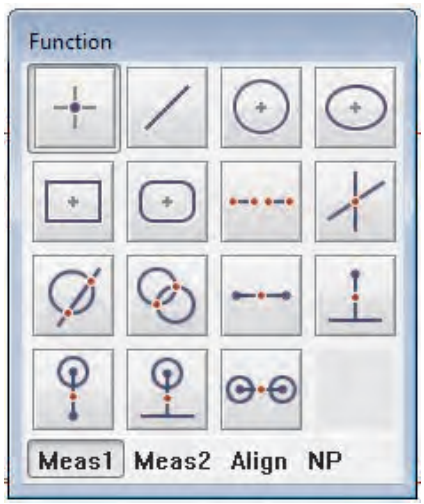

Measurement item commands

Specifications

QIPAK Additional software (optional)	MEASURLINK (refer to the Measurlink page) QS CAD-IMPORT/EXPORT FORMTRACEPAK-AP(1) EASYPAG (only for QS CNC)

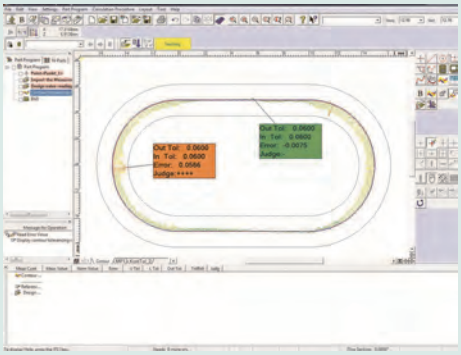

(1) FORMTRACEPAK-AP

Simple and easy-to-use 2D contour analysis.
Graphic reports (geometry or scanning) edition.
Allows measurement by comparison.
For more information refer to FORMTRACEPAK-AP

All products to be sold to commercial customers. Product illustrations are without obligation. Product descriptions, in particular any and all technical specifications, are only binding when explicitly agreed upon. For suggested retail prices, please refer to the separate price list.

Quick Vision ACTIVE Series

Series 363

This CNC Vision Measuring System combines the flexibility of a high quality zoom lens with the speed of a state-of-the-art digital colour camera and offers the following benefits:
- Programmable LED stage and coaxial light
- Programmable 4-quadrant LED ring light
- High-resolution and high-speed CMOS colour camera
- High-quality 7-step zoom optics with interchangeable lenses
- Compact design
- Powerful, user-friendly QVPAK software
- Touch probe option: 364 Series or retrofit.

Quick Vision ACTIVE 404

No.	Type	Model	Range (X, Y, Z-axis) with Vision Head	Accuracy	Max. stage loading [kg]	Mass [kg]
363-109-10Y	QV ACTIVE 202	QV-L202Z1L-D	250 x 200 x 150 mm	$E_{1(x,y)}$ = (2+0,3L/100) µm $E_{1(z)}$ = (3+0,5L/100) µm $E_{2(XY)}$= (2,5+0,4 L/100) µm L = measured length (mm)	10	155
363-110-10Y	QV ACTIVE 404	QV-L404Z1L-D	400 x 400 x 200 mm	$E_{1(x,y)}$ = (2+0,3L/100) µm $E_{1(z)}$ = (3+0,5L/100) µm $E_{2(XY)}$= (2,5+0,4 L/100) µm L = measured length (mm)	20	324

Accuracy: According to Mitutoyo inspection method / Mass: Main Unit with Stand

QV ACTIVE with optional Opti-fix clamping system

Specifications

Resolution	0,1 µm
Illumination	(White LED) • Contour • Coaxial • 4-quadrant ring light
Magnification change system	Zoom optical system with 8 positions Standard 1,5X magnification lens
Sensor type	High resolution CMOS colour camera
Additional objective lenses	1X and 2X magnification

Optional accessories

No.	Description
Calibration charts	
02ATN695	Calibration Chart, Pixel Calibration Chart with Holder
Machine stands	
02ATV515	Machine Stand QVST-2L
02ATV522	Machine Stand QVST-4L

1X, 1.5X and 2X interchangeable lens

All products to be sold to commercial customers. Product illustrations are without obligation. Product descriptions, in particular any and all technical specifications, are only binding when explicitly agreed upon. For suggested retail prices, please refer to the separate price list.

Quick Vision APEX / HYPER Series

Series 363

This CNC Vision Measuring System is a floor-standing vision measuring machine which offers you the following benefits:
- Programmable LED stage and coaxial lighting.
- Programmable 4-quadrant LED ring light.
- Pattern focus function.
- Accuracy specifications conforming to ISO 10360-7 standard (on request).
- Temperature compensation as standard feature.
- Touch probe option: 364 Series or retrofit

Optional PFF Function (Points From Focus)
- PFF enhances the functionality of standard QV models with 3D topography measurements
- No additional sensor necessary
- High scanning range in Z axis from 2,7 mm up to 40,6 mm depending on the objective lens in use and in wide range mode

Quick Vision Apex 302 PRO

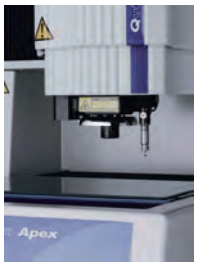

Touch Probe option

Workpiece to be measured with PFF

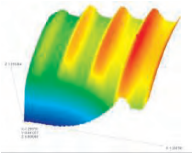

3D Analysis of PFF measurement

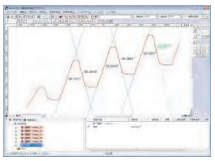

2D Analysis of PFF measurement

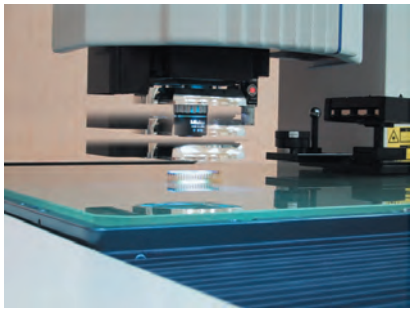

PRL = Programmable Ring Light
Fine control of angle and direction provides illumination for optimal measurement. You can set the angle in the range from 30° to 80°. This type of illumination is effective for enhancing the edge of inclined surfaces or very small steps. Illumination can be controlled independently from back or front, right or left. Measurement with edge enhancement is possible if you form a shadow by illuminating from only one direction.

Specifications

Illumination	**White LED:** - Contour - Coaxial - 4 quadrant PRL
Magnification change system	Programmable Power Turret (PPT) 1X ; 2X ; 6X
Sensor Type	**QV PRO Models:** High sensitivity CCD B&W camera **QV PRO3 Models:** High sensitivity CCD Colour camera
Factory option	**For QV APEX and QV HYPER:** **- TAF** Tracking Auto Focus **For QV APEX:** **- PRO 3 models** Colour CCD camera Refer to the Quick Vision Accessories page for details
Additional objective lenses	Refer to the Optical Accessories page for Quick Scope / Quick Vision

Optional accessories

No.	Description
Calibration charts	
02ATN695.	Calibration chart with holder
Machine stands	
02ATN332.	Machine Stand for QV-302
02ATN333.	Machine Stand for QV-404
02ATN334.	Machine Stand for QV-606

Refer to the Optical Accessories page for Quick Scope / Quick Vision for more information on calibration charts.

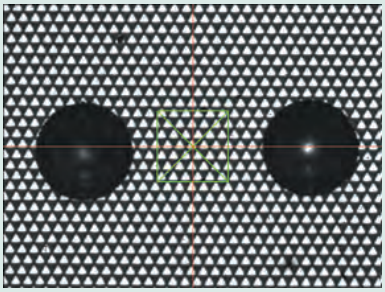

Auto Focus Tool : type Pattern Focus (tool for focusing on difficult surfaces such as mirrors, polished surface clear glass).

Refer to the Quick Vision brochure

All products to be sold to commercial customers. Product illustrations are without obligation. Product descriptions, in particular any and all technical specifications, are only binding when explicitly agreed upon. For suggested retail prices, please refer to the separate price list.

Quick Vision APEX / HYPER Series

Quick Vision brochure on request

Scan QR Code with your mobile device and watch our product videos on YouTube

Series 363 - Quick Vision APEX / HYPER

Quick Vision 302
Range : 300 x 200 x 200 mm

Type	Quick Vision APEX 302 PRO	Quick Vision APEX 302 PRO3	Quick Vision HYPER 302 PRO
No.	**363-170-10SY**	**363-171-10Y**	**363-173-10SY**
Model	QV-X302P1L-D	QV-X302P3L-D	QV-H302P1L-D
Resolution µm	0,1	0,1	0,02
Accuracy(1)	$E_{1(x, y)}$ = (1,5+0,3L/100) $E_{1(z)}$ = (1,5+0,4L/100) $E_{2(xy)}$ = (2+0,4L/100)	$E_{1(x, y)}$ = (1,5+0,3L/100) $E_{1(z)}$ = (1,5+0,4L/100) $E_{2(xy)}$ = (2+0,4L/100)	$E_{1(x, y)}$ = (0,8+0,2L/100) $E_{1(z)}$ = (1,5+0,2L/100) $E_{2(xy)}$ = (1,4+0,3L/100)
Max. stage loading kg	20	20	15
Mass kg	360	360	360

Quick Vision 404
Range : 400 x 400 x 250 mm

Type	Quick Vision APEX 404 PRO	Quick Vision APEX 404 PRO3	Quick Vision HYPER 404 PRO
No.	**363-180-10SY**	**363-181-10Y**	**363-183-10SY**
Model	QV-X404P1L-D	QV-X404P3L-D	QV-H404P1L-D
Resolution µm	0,1	0,1	0,02
Accuracy(1)	$E_{1(x, y)}$ = (1,5+0,3L/100) $E_{1(z)}$ = (1,5+0,4L/100) $E_{2(xy)}$ = (2+0,4L/100)	$E_{1(x, y)}$ = (1,5+0,3L/100) $E_{1(z)}$ = (1,5+0,4L/100) $E_{2(xy)}$ = (2+0,4L/100)	$E_{1(x, y)}$ = (0,8+0,2L/100) $E_{1(z)}$ = (1,5+0,2L/100) $E_{2(xy)}$ = (1,4+0,3L/100)
Max. stage loading kg	40	40	30
Mass kg	579	579	579

Quick Vision 606
Range : 600 x 650 x 250 mm

Type	Quick Vision APEX 606 PRO	Quick Vision APEX 606 PRO3	Quick Vision HYPER 606 PRO
No.	**363-190-10SY**	**363-191-10Y**	**363-193-10SY**
Model	QV-X606P1L-D	QV-X606P3L-D	QV-H606P1L-D
Resolution µm	0,1	0,1	0,02
Accuracy(1)	$E_{1(x, y)}$ = (1,5+0,3L/100) $E_{1(z)}$ = (1,5+0,4L/100) $E_{2(xy)}$ = (2+0,4L/100)	$E_{1(x, y)}$ = (1,5+0,3L/100) $E_{1(z)}$ = (1,5+0,4L/100) $E_{2(xy)}$ = (2+0,4L/100)	$E_{1(x, y)}$ = (0,8+0,2L/100) $E_{1(z)}$ = (1,5+0,2L/100) $E_{2(xy)}$ = (1,4+0,3L/100)
Max. stage loading kg	50	50	40
Mass kg	1450	1450	1450

Quick Vision Apex 404 PRO

All products to be sold to commercial customers. Product illustrations are without obligation. Product descriptions, in particular any and all technical specifications, are only binding when explicitly agreed upon. For suggested retail prices, please refer to the separate price list.

Quick Vision STREAM PLUS Series

Series 363

This CNC vision measuring system enables you to carry out measurements at lightning speed.
The Quick Vision Stream Plus offers you the following benefits:

- Non-stop measurement in your production environment thanks to high-tech lighting options.
- Combining quadricolour and stroboscopic lighting, it captures and processes all the workpiece images you need to make accurate and rapid measurements.

Quick Vision STREAM PLUS 606 PRO

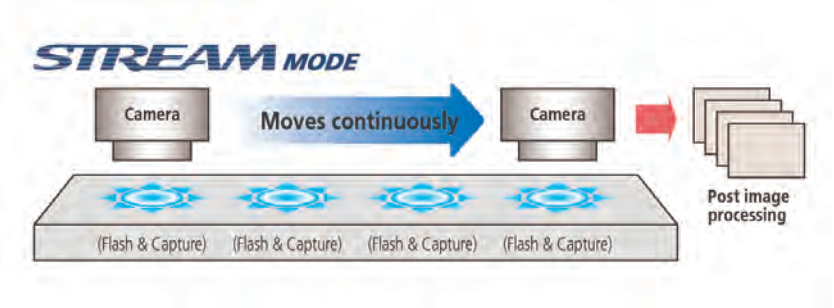

STREAM Mode

- The measurement mode of non-stop vision measuring is referred to as the STREAM mode.

Type	Quick Vision STREAM PLUS 302	Quick Vision STREAM PLUS 404	Quick Vision STREAM PLUS 606
No.	**363-172-10Y**	**363-182-10Y**	**363-192-10Y**
Model	QV-X302P1S-D	QV-X404P1S-D	QV-X606P1S-D
Range (X, Y, Z-axis) with Vision Head	300 x 200 x 200 mm	400 x 400 x 250 mm	600 x 650 x 250 mm
Max. measuring speed	40 mm/s	40 mm/s	40 mm/s
Max. drive speed (X-, Y-, Z-axis)	300 mm/s	**XY :** 400 mm/s **Z :** 300 mm/s	**XY :** 400 mm/s **Z :** 300 mm/s

Other features are identical to QV-APEX

Specifications

Resolution	0,1 µm
CCD camera	High-sensitivity B&W, progressive scan CCD
Accuracy (1)	$E_{1(x,y)}$ = (1,5+0,3L/100) µm $E_{1(z)}$ = (1,5+0,4L/100) µm $E_{2(xy)}$ = (2+0,4L/100) µm **L =** measured length (mm) (1) According to Mitutoyo inspection method
Illumination	Hi-intensity LED (stroboscopic and continuous illumination, switchable) : - Contour (Blue) - Coaxial (RGB & W) - 4-quadrant PRL (RGB & W) **(PRL : refer to the QV-ELF page)** Pattern focus function **(Pattern focus : refer to the QV-ACCEL page)**

Additional Specifications

Factory option	**- Tracking Auto Focus (TAF)** (Refer to Quick Vision Accessories for details)
Additional objective lenses	Refer to the Optical Accessories page for Quick Scope / Quick Vision

Optional accessories

No.	Description
Calibration charts	
02ATN695.	Calibration chart with holder
Machine stands	
02ATN332.	Machine Stand for QV-302
02ATN333.	Machine Stand for QV-404
02ATN334.	Machine Stand for QV-606

Refer to the Optical Accessories page for Quick Scope / Quick Vision for more information on calibration charts.

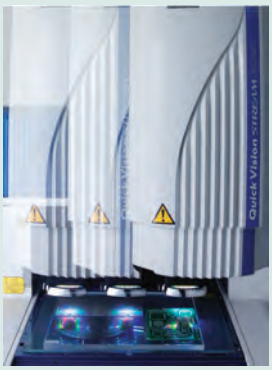

Non-stop vision measurement

Refer to the Quick Vision brochure

Scan QR Code with your mobile device and watch our product videos on YouTube

All products to be sold to commercial customers. Product illustrations are without obligation. Product descriptions, in particular any and all technical specifications, are only binding when explicitly agreed upon. For suggested retail prices, please refer to the separate price list.

Quick Vision ACCEL Series

Series 363

This CNC vision measuring system is a moving-bridge type structure.
The Quick Vision ACCEL offers you the following benefits:

- The moving-bridge type structure results in a fixed stage. This means that the workpiece fixture can be designed more simply, which in turn means you need significantly fewer man-hours for fixture fabrication and inspection.
- The system comes complete with a machine stand.
- 3D topography measurements are possible with the optional PFF functionality.
- Touch probe option: 364 Series or retrofit
- Tracking Auto Focus (TAF) as factory option.

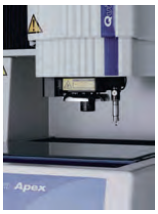

Touch Probe option

Quick Vision ACCEL 1212 PRO3

Model PRO	QV ACCEL 808 PRO	QV ACCEL 1010 PRO	QV ACCEL 1212 PRO	QV ACCEL 1517 PRO3
No.	**363-315-10Y**	**363-335-10Y**	**363-355-10Y**	**363-375-10Y**
Model PRO3	QV ACCEL 808 PRO3	QV ACCEL 1010 PRO3	QV ACCEL 1212 PRO3	QV ACCEL 1517 PRO3
No.	**363-316-10Y**	**363-336-10Y**	**363-356-10Y**	**363-376-10Y**
Range (X, Y, Z-axis) with Vision Head	800 x 800 x 150 mm	1000 x 1000 x 150 mm	1250 x 1250 x 100 mm	1500 x 1750 x 100 mm
Max. drive speed X, Y-axis mm/s	400	400	300	300
Accuracy E1(x,y) (3)	(1,5+0,3L/100) µm	(1,5+0,3L/100) µm	(2,2+0,3L/100) µm	(2,2+ 0,3L/100) µm
Stage glass size [mm]	883 x 958	1186 x 1186	1440 x 1440	1714 x 1968
Max. stage loading kg	10	30	30	30
Mass kg	2050	2950	3600	4500

(3) According to Mitutoyo inspection method L = measured length (mm)
For a description of PRO and PRO3 models, refer to QV-APEX

Specifications

Resolution	0,1 µm
High-sensitivity CCD camera	**PRO models** : B&W **PRO3 models** : Colour
Contour illumination	**PRO models** : White LED **PRO3 models** : White LED
Coaxial illumination	**PRO models** : White LED **PRO3 models** : White LED
4-quadrant PRL (1) illumination	**PRO models** : White LED **PRO3 models** : White LED **(1) PRL : refer to the QV APEX**
Pattern Focus (2)	**(2) See image below**
Magnification change system	Programmable Power Turret (PPT) 1X ; 2X ; 6X

Additional Specifications

Additional objective lenses	Refer to the Optical Accessories page for Quick Scope / Quick Vision
Factory option	**- Tracking Auto Focus (TAF)** Refer to Quick Vision accessories

Optional accessories

No.	Description
02ATN695.	Calibration chart with holder

Refer to the Optical Accessories page for Quick Scope / Quick Vision for more information on calibration charts.

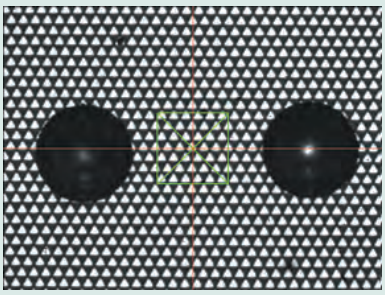

Auto Focus Tool : type Pattern Focus (focusing for option difficult surfaces such as mirrors, polished surface clear glass).

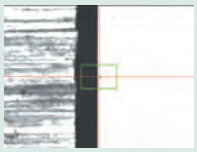

Auto Focus Tool : Edge Focus type

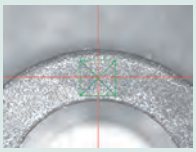

Auto Focus Tool : Surface Focus type

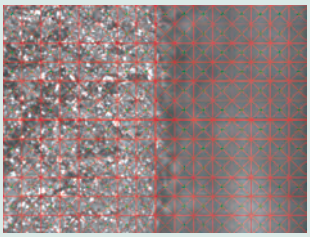

Auto Focus Tool : Multi-point Auto Focus type

Quick Vision brochure on request

All products to be sold to commercial customers. Product illustrations are without obligation. Product descriptions, in particular any and all technical specifications, are only binding when explicitly agreed upon. For suggested retail prices, please refer to the separate price list.

Quick Vision ULTRA

Series 363

This CNC vision measuring system gives you ultra-high accuracy.
The Quick Vision ULTRA offers you the following benefits:

- Axial translation straightness is maximised through the use of a precision air-bearing linear guide system.
- High resolution (0,01 µm) scales, manufactured at an ultra-precision facility located 11 m underground, are used on all axes.
- The scales are made from glass that has a virtually zero thermal expansion coefficient, so your measuring accuracy has minimal variation in changing temperatures.
- The base structure was designed using Finite Element Method analysis; this gives you the optimal stiffness/weight ratio combined with excellent geometrical stability, in terms of axial straightness/ perpendicularity, with changing temperatures.
- Accuracy specification conforming to ISO 10360-7 are available (on request).
- 3D topography measurements are possible with the optional PFF functionality.

Quick Vision ULTRA 404 PRO

Type	Quick Vision ULTRA 404 PRO
No.	**363-518-10SY**
Model	QV-U404P1N-D
Range (X, Y, Z-axis) with Vision Head	400 x 400 x 200 mm
Accuracy [1]	$E_{1(x,y)}$ = (0,25+0,1L/100) µm $E_{1(z)}$ = (1,5+0,2L/100) µm $E_{2(xy)}$ = (0,5+0,2L/100) µm L = measured length (mm)
Resolution µm	0,01
Magnification change system	Programmable Power Turret (PPT) 1X ; 2X ; 6X
Dimensions (W x D x H) [2] mm	1172 x 1735 x 1910
CCD camera	High-sensitivity CCD B&W
Max. drive speed (X-, Y-, Z-axis)	150 mm/s
Illumination	Halogen (Cold light via optical fibre) - Contour - Coaxial - 4-quadrant PRL (PRL : refer to the QV-APEX page)
Max stage loading [kg]	40
Stage glass size [mm]	493 x 551
Mass [2] kg	2150

[1] According to Mitutoyo inspection method.
[2] Including machine stand

Additional Specifications

Factory option	**- Tracking Auto Focus (TAF)** Refer to Quick Vision Accessories page
Additional objective lenses	Refer to Objective page for Quick Scope / Quick Vision

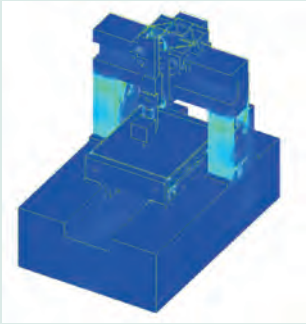

By using FEM (Finite Element Method) analysis of the base design, the placement of stiffening ribs and beams has been determined for the Ultra Quick Vision to provide optimal structural rigidity.

Ultra-precision scale manufacturing facility 11 metres underground

Ultra-high accuracy crystallized glass scale with virtually zero thermal expansion.
The Ultra Quick Vision is equipped with a crystallized glass scale having a resolution of 0.01 µm and linear expansion coefficient of 0.08 x 10^{-6}/K. This virtually zero thermal expansion means the Ultra Quick Vision can minimise accuracy fluctuation due to thermal changes.

Quick Vision brochure on request

All products to be sold to commercial customers. Product illustrations are without obligation. Product descriptions, in particular any and all technical specifications, are only binding when explicitly agreed upon. For suggested retail prices, please refer to the separate price list.

Quick Vision HYBRID Type 1 Series

Specifications

Factory option	**- Colour CCD camera** QV PRO 3 models

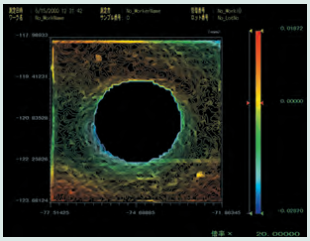

Curved-form analysis (MSHAPE-QV)
2D / 3D contour lines display
2D / 3D unfiltered profile display
Shadowgraph display
Curved plane analysis
Unfiltered profile analysis, etc.

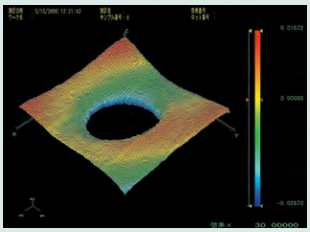

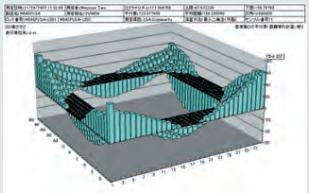

Data processing (QV Graph)
3D bar chart display
3D surface chart display
2D continuous cross-section graph display

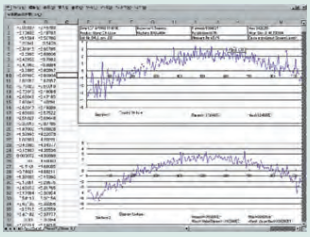

Quick Vision brochure on request

Series 365 - CNC Vision Measuring System

This CNC vision measuring system is a multi-sensor machine.
The Quick Vision HYBRID Type 1 offers you the following benefits:

- It allows you to make vision measurements with a CCD camera, and carry out high-speed scanning, by applying a vision measurement unit in parallel with a non-contact displacement sensor.
- The focusing point method minimises the difference in the measuring face reflectance and gives you high measurement reproducibility.
- The double pinhole method (less directivity) is employed as the measurement principle.

Quick Vision H1 APEX 404 PRO

Quick Vision Hybrid system - Type 1

The scanning laser system for Quick Vision HYBRID adds 3D profiling capability. The laser probe with 0.01 µm resolution continuously scans the workpiece surface and gathers coordinate data, enabling the evaluation of surface contours, peak heights, etc. The double pinhole detection method is adopted to prevent measurement being affected by the colour, reflection factor, etc., of the surface.

Available for Quick Vision APEX ; Quick Vision STREAM PLUS ; Quick Vision HYPER and Quick Vision ACCEL models.

All products to be sold to commercial customers. Product illustrations are without obligation. Product descriptions, in particular any and all technical specifications, are only binding when explicitly agreed upon. For suggested retail prices, please refer to the separate price list.

Quick Vision HYBRID Type 1 Series

Series 365 - CNC Vision Measuring System

Quick Vision ACCEL-based
Accuracy when using vision sensor: Same as standard Quick Vision ACCEL
Accuracy $E_{1(z)}$ when using non-contact displacement sensor: QV ACCEL 808 and 1010 (2,5+0,4L/100) µm
QV ACCEL 1212 and 1517 (3,5+0,5L/100) µm [1]

Type	Quick Vision H1 ACCEL 808	Quick Vision H1 ACCEL 1010	Quick Vision H1 ACCEL 1212	Quick Vision H1 ACCEL 1517
No.	**365-315-10Y**	**365-335-10Y**	**365-355-10Y**	**365-375-10Y**
Model	QVH1-A808P1L-C	QVH1-A1010P1L-C	QVH1-A1212P1L-C	QVH1-A1517P1L-C
Range - Vision	800 x 800 x 150 mm	1000 x 1000 x 150 mm	1250 x 1250 x 100 mm	1500 x 1750 x 100 mm
Range - Non-contact Displacement Sensor (Type 1)	680 x 800 x 150 mm	880 x 1000 x 150 mm	1130 x 1250 x 100 mm	1380 x 1750 x 100 mm

Quick Vision APEX-based
Accuracy when using vision sensor: Same as standard Quick Vision APEX
Accuracy $E_{1(z)}$ when using non-contact displacement sensor: (1,5+0,4L/100) µm [1]

Type	Quick Vision H1 APEX 302	Quick Vision H1 APEX 404	Quick Vision H1 APEX 606
No.	**365-170-10SY**	**365-180-10SY**	**365-190-10SY**
Model	QVH1-X302P1L-D	QVH1-X404P1L-D	QVH1-X606P1L-D
Range - Vision	300 x 200 x 200 mm	400 x 400 x 250 mm	600 x 650 x 250 mm
Range - Non-contact Displacement Sensor (Type 1)	180 x 200 x 200 mm	280 x 400 x 250 mm	480 x 650 x 250 mm

Quick Vision HYPER-based
Accuracy when using vision sensor: Same as standard Quick Vision HYPER
Accuracy $E_{1(z)}$ when using non-contact displacement sensor: (1,5+0,2L/100) µm [1]

Type	Quick Vision H1 HYPER 302	Quick Vision H1 HYPER 404	Quick Vision H1 HYPER 606
No.	**365-173-10SY**	**365-183-10SY**	**365-193-10SY**
Model	QVH1-H302P1L-D	QVH1-H404P1L-D	QVH1-H606P1L-D
Range - Vision	300 x 200 x 200 mm	400 x 400 x 250 mm	600 x 650 x 250 mm
Range - Non-contact Displacement Sensor (Type 1)	180 x 200 x 200 mm	280 x 400 x 250 mm	480 x 650 x 250 mm

Quick Vision STREAM PLUS-based
Accuracy when using vision sensor: Same as standard Quick Vision STREAM PLUS
Accuracy $E_{1(z)}$ when using non-contact displacement sensor: (1,5+0,4L/100) µm [1]

Type	Quick Vision H1 STREAM PLUS 302	Quick Vision H1 STREAM PLUS 404	Quick Vision H1 STREAM PLUS 606
No.	**365-172-10Y**	**365-182-10Y**	**365-192-10Y**
Model	QVH1-X302P1S-D	QVH1-X404P1S-D	QVH1-X606P1S-D
Range - Vision	300 x 200 x 200 mm	400 x 400 x 250 mm	600 x 650 x 250 mm
Range - Non-contact Displacement Sensor (Type 1)	180 x 200 x 200 mm	280 x 400 x 250 mm	480 x 650 x 250 mm

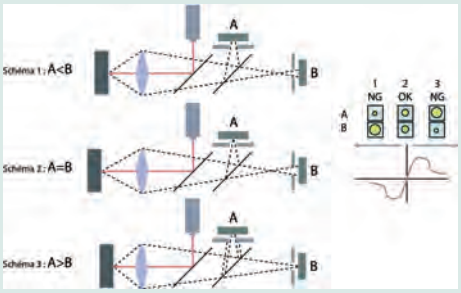

QV-Hybrid Type 1 : Laser principle, double pinhole method

All products to be sold to commercial customers. Product illustrations are without obligation. Product descriptions, in particular any and all technical specifications, are only binding when explicitly agreed upon. For suggested retail prices, please refer to the separate price list.

Quick Vision HYBRID Type 4 Series

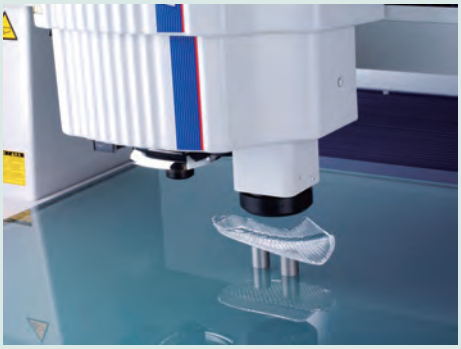

Hybrid Type 4 system

The Quick Vision Hybrid Type 4 is a machine which allows vision measurement with a CCD camera and high-speed scanning with a non-contact displacement sensor.

The Hybrid Type 4 CPS sensor is available for Quick Vision Apex/Hyper and Quick Vision Stream Plus models.

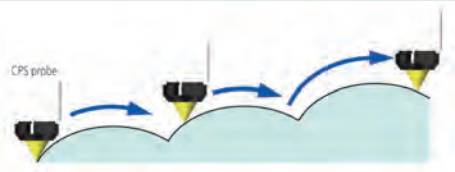

Scanning measurement with automatic movement of the Z-axis

Form analysis of plastic molded parts having a slope.

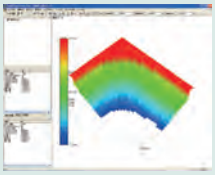

Solid colour display

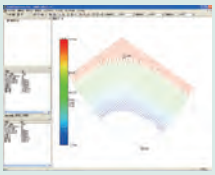

Shaped display

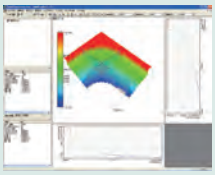

Extraction of arbitrary section

Series 365 - CNC Vision Measuring System

- The Quick Vision HYBRID type 4 is a multi-sensor machine that enables the topography of the surface and the thickness of transparent objects to be measured.
- The measuring range of the scanning sensor is 0-1200 µm.
- Effective even for high inclination angles both of mirrored surfaces and diffuse surfaces. Maximum measurable inclination angle : ±80° (diffuse surface).
- Achieves high resolution and high accuracy height measurement by the wavelength confocal method using axial chromatic aberration.
- The automatic light intensity control provides reliable measurements even when reflectance of the measured surface changes during measurement.

Quick Vision H4 HYPER 606 PRO

1: QV APEX-based
Accuracy when using vision sensor: Same as standard Quick Vision APEX
Accuracy $E_{1(z)}$ when using non-contact displacement sensor: (1,5+0,4L/100) µm(1)

Type	Quick Vision H4 APEX 302	Quick Vision H4 APEX 404	Quick Vision H4 APEX 606
No.	**365-413-10SY**	**365-433-10SY**	**365-453-10SY**
Model	QVH4A-X302P1L-D	QVH4A-X404P1L-D	QVH4A-X606P1L-D
Range (X, Y, Z-axis) with Vision Head	300 x 200 x 200 mm	400 x 400 x 250 mm	600 x 650 x 250 mm
Range - Non-contact Displacement Sensor (Type 4)	176 x 200 x 200 mm	276 x 400 x 250 mm	476 x 650 x 250 mm

2: QV STREAM PLUS-based
Accuracy when using vision sensor: Same as standard Quick Vision STREAM PLUS
Accuracy $E_{1(z)}$ when using non-contact displacement sensor: (1,5+0,4L/100) µm(1)

Type	Quick Vision H4 STREAM PLUS 302	Quick Vision H4 STREAM PLUS 404	Quick Vision H4 STREAM PLUS 606
No.	**365-415-10Y**	**365-435-10Y**	**365-455-10Y**
Model	QVH4A-X302P1S-D	QVH4A-X404P1S-D	QVH4A-X606P1S-D
Range (X, Y, Z-axis) with Vision Head	300 x 200 x 200 mm	400 x 400 x 250 mm	600 x 650 x 250 mm
Range - Non-contact Displacement Sensor (Type 4)	176 x 200 x 200 mm	276 x 400 x 250 mm	476 x 650 x 250 mm

3: QV HYPER-based
Accuracy when using vision sensor: Same as standard Quick Vision HYPER
Accuracy $E_{1(z)}$ when using non-contact displacement sensor: (1,5+0,2L/100) µm(1)

Type	Quick Vision H4 HYPER 302	Quick Vision H4 HYPER 404	Quick Vision H4 HYPER 606
No.	**365-416-10SY**	**365-436-10SY**	**365-456-10SY**
Model	QVH4A-H302P1L-D	QVH4A-H404P1L-D	QVH4A-H606P1L-D
Range (X, Y, Z-axis) with Vision Head	300 x 200 x 200 mm	400 x 400 x 250 mm	600 x 650 x 250 mm
Range - Non-contact Displacement Sensor (Type 4)	176 x 200 x 200 mm	276 x 400 x 250 mm	476 x 650 x 250 mm

All products to be sold to commercial customers. Product illustrations are without obligation. Product descriptions, in particular any and all technical specifications, are only binding when explicitly agreed upon. For suggested retail prices, please refer to the separate price list.

Mitutoyo

Quick Vision White Light Interferometer

Series 363

- Combined non contact measurements with vision system and White Light Interferometer (WLI)
- Easy alignment and positioning with vision sensor
- Full QVPAK functionality with Vision system
- Enhanced functionality with WLI-system for high resolution topography evaluation such as surface roughness analysis

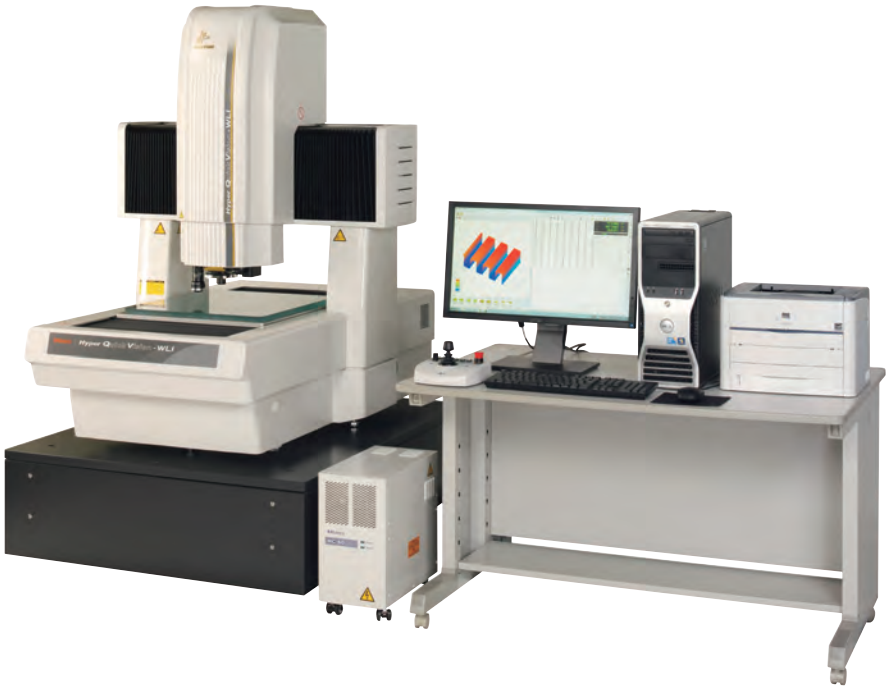

Quick Vision WLI 404 PRO

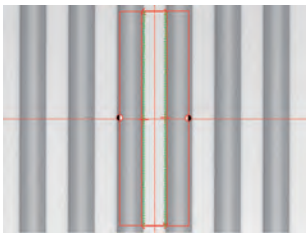

Video image of part

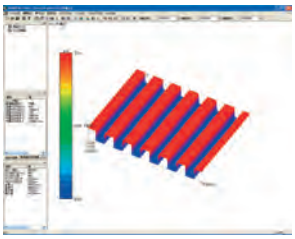

3D Analysis of measured part

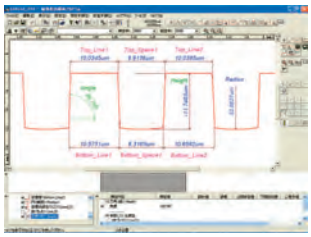

2D Analysis of measured part

Specifications when using vision sensor are same as Quick Vision HYPER

Type	Hyper Quick Vision WLI 302	Hyper Quick Vision WLI 404	Hyper Quick Vision WLI 606
No.	**363-713-10SY**	**363-714-10SY**	**363-715-10SY**
Model	QVW-H302P1L-D	QVW-H404P1L-D	QVW-H606P1L-D
Range (X, Y, Z-axis) with Vision Head	300 x 200 x 190 mm	400 x 400 x 240 mm	600 x 650 x 220 mm
Range with WLI Head	215 x 200 x 190 mm	315 x 400 x 240 mm	515 x 650 x 220 mm
Tube Lens WLI Head	2x	2x	2x
Repeatability WLI Head	$2\sigma \leq 0{,}08$ µm	$2\sigma \leq 0{,}08$µm	$2\sigma \leq 0{,}08$µm
Z-axis measuring range WLI Head	170 µm	170 µm	170 µm
Max. stage loading kg	15	25	35

Scan QR Code with your mobile device and watch our product videos on YouTube

Optional accessories

No.	Description
02ALT630	Quick Vision WLI Objective, A-10X
02ALT670	Quick Vision WLI Objective, A-25X
02ALY400	Quick Vision WLI Objective, A-5X

QV WLI Objective lenses
Magnification 10X: Field of View 0,32 x 0,24 mm
Magnification 25X: Field of View 0,128 x 0,096 mm
Magnification 5X: Field of View 0,64 x 0,48 mm

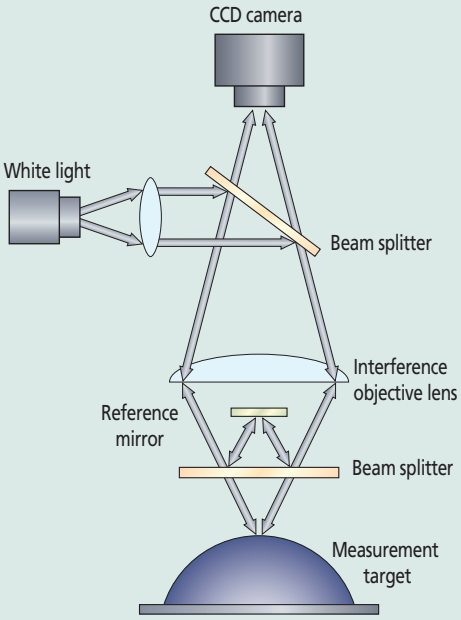

WLI optical system head

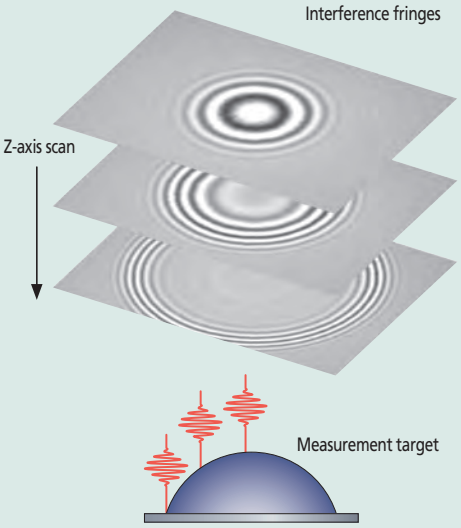

Interference fringes and intensity depiction

All products to be sold to commercial customers. Product illustrations are without obligation. Product descriptions, in particular any and all technical specifications, are only binding when explicitly agreed upon. For suggested retail prices, please refer to the separate price list.

UMAP Vision System Series

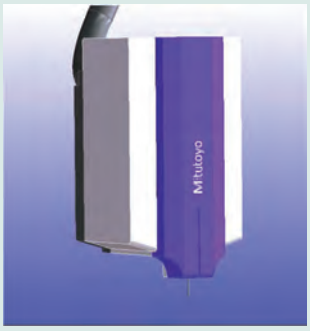

UMAP Probe Unit

UMAP Probes
(ultrasonic micro stylus probes)
Stylus ultrasonic micro-vibration and its amplitude-sensing enable UMAP probe to perform contact measurement of micro-features of parts.
5 choices of stylus tip diameter are available from 15 µm to 300 µm.

UMAP 101
ø15 µm
L = 0,2 mm

UMAP 103
ø30 µm
L = 2 mm

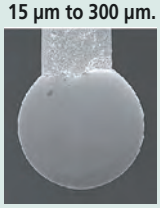

UMAP 107
ø70 µm
L = 5 mm

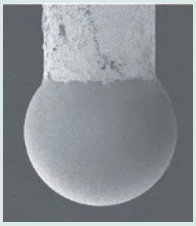

UMAP 110
ø100 µm
L = 10 mm

UMAP 130
ø300 µm
L = 16 mm

Refer to the UMAP Vision system brochure

UMAP : Ultra Micro Accurate Probe

The UMAP (Ultra Micro Accurate Probe) is a micro-form measuring system
The UMAP offers you the following benefits:

- Dual functions of high-accuracy contact and non-contact measurement in one machine.
- Contact (micro-stylus UMAP probe) and non-contact (vision probe) measuring probes are installed.
- You can measure micro-features of parts previously impossible to reach.
- Several diameters of micro-stylus are available from 15 µm to 300 µm.

Hyper UMAP 302 Type 2

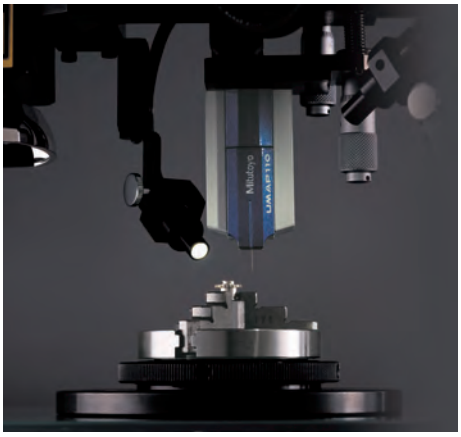

Type 2 - QVPAK + CCD + UMAP Probe

Type	Hyper UMAP 302 Type 2	Ultra UMAP 404 Type 2
No.	**364-713-10SY**	**364-717-10SY**
Model	UVS2-H302P1L-D	UVS2-U404P1N-D
Range (X-, Y-axis) (1)	185 x 200 mm	285 x 400 mm
Range (Z-axis) (1)	**- UMAP 101/103 :** 175 mm **- UMAP 107/110 :** 180 mm **- UMAP 130 :** 185 mm	**- UMAP 101/103 :** 175 mm **- UMAP 107/110 :** 180 mm **- UMAP 130 :** 185 mm
Accuracy (2)	$E_{1(x,y)}$ = (0,8+0,2L/100) µm $E_{1(Z)}$ = (1,5+0,2L/100) µm	$E_{1(x,y)}$ = (0,25+0,1L/100) µm $E_{1(Z)}$ = (1,5+0,2L/100) µm
Repeatability (σ)	**- UMAP 101/103/107 :** 0,1 µm **- UMAP 110/130 :** 0,15 µm	**- UMAP 101/103/107 :** 0,08 µm **- UMAP 110/130 :** 0,12 µm

All products to be sold to commercial customers. Product illustrations are without obligation. Product descriptions, in particular any and all technical specifications, are only binding when explicitly agreed upon. For suggested retail prices, please refer to the separate price list.

M-NanoCoord

This newly developed 3D CNC ultra-high resolution measuring system is capable of the most precise movements, giving you unsurpassed form measurement accuracy in the nanometre region. The M-NanoCoord offers you the following benefits:

- Laser Holoscales with one nanometre resolution and virtually zero thermal expansion give you extreme measuring accuracy of (0,2+0,1L/100) µm.
- The fixed bridge, moving table construction and high-precision air bearings further improve the accuracy of your measurements.
- Particularly suitable for workpieces with very small dimensions, such as MEMS parts, integrated circuits, precision formed components, aspheric lenses.
- Every model of the M-NanoCoord Series has a newly developed ultra-high accuracy main unit with a vision probe as a standard accessory.
- Can be equipped with micro probe systems as a factory option.

M-NanoCoord

No.	Resolution [nm]	Range (X, Y, Z-axis) with Vision Head	Accuracy [1]
M-NanoCoord	1	200 x 200 x 100 mm	$E_{1(x,y)}$ = (0,2+0,1L/100) µm

[1] According to Mitutoyo inspection method L = measuring length (mm)

Example of an M-NanoCoord-LNP measurement application

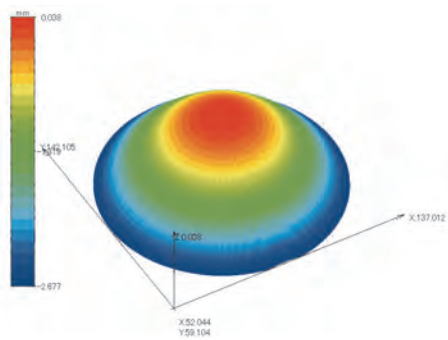

Aspherical lens measurement result

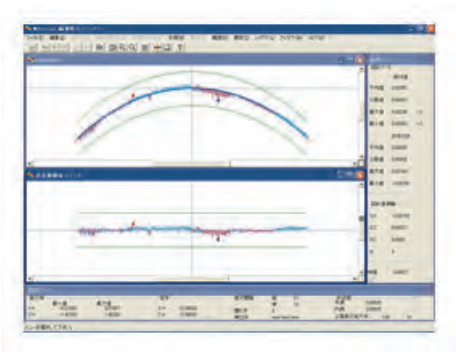

Aspherical lens analysis by lens section comparison

Specifications

Main unit	**Structure** XY-plane guiding structure **Guiding method** Hydrostatic air bearing **Scales** Low-expansion laser holoscale
Vision Head	- Programmable Power Turret (PPT) - 4-quadrant LED (PRL) - High-sensitivity megapixel CCD camera
Factory options	**- UMAP Probes** Touch signal probe with a micro stylus (Refer the UMAP page for details) **UMAP 101** ø15µm ; L=0,2 mm **UMAP 103** ø30 µm ; L=2 mm **UMAP 107** ø70 µm ; L=5 mm **UMAP 110** ø100 µm ; L=10 mm **UMAP 130** ø300 µm ; L=16 mm **- LNP "Long-range Nano Probe"** Minute Form Probe

LNP Probe : Long range Nano Probe

LNP allows measurement of minute features on workpieces such as light guide plates, using a diamond stylus with tip radius of 2 µm (optional). LNP allows scanning measurement with steeply-inclined surfaces of ±80° and touch-probe measurement of ±90° by vibration-type contact scanning probe with ultra-low measuring force (min. measuring force : 10 µN).

All products to be sold to commercial customers. Product illustrations are without obligation. Product descriptions, in particular any and all technical specifications, are only binding when explicitly agreed upon. For suggested retail prices, please refer to the separate price list.

Software for Quick Vision Systems

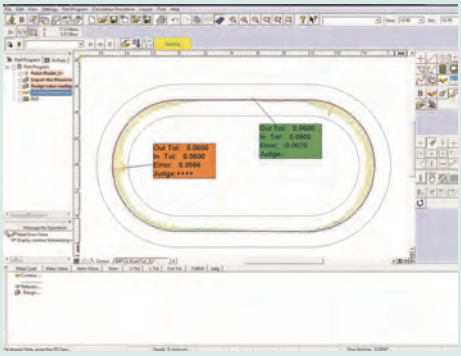

FORMTRACEPAK-AP
Simple and easy-to-use 2D contour analysis.
Graphic reports (geometry or scanning) edition.
Allows measurement by comparison.
For more information refer to FORMTRACEPAK-AP.

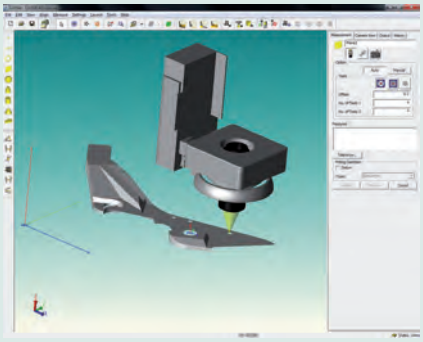

QV3DCAD-Online
Automatic program generation from 3D CAD files issued from a CAD system (must be associated with a converter).

Vision Measuring Machines brochures on request

QVPAK

- QVPAK controls multiple sensors: CCD, Touch Probe, continuous scanning devices, special UMAP or LNP probes.
- Powerful mathematical algorithms are provided that help you to detect difficult edges via noise filters (similar to morphological filters) and advanced detection tools that take into account the texture of the target surface.
- Partprogramming and editing is made easy with the user friendly Easy Editor.
- 3D graphic display or measuring planes display with the QVClient QVGraphic.
- QVPAK also offers you various QVClients (standard), real assistants for users (programmation mode) or operators (production mode) such as QVSmartEditor and QVNavigator.

Optional software modules for Quick Vision System

- Formtracepak-AP-QV for 2D contour analysis
- Formtracepak-Pro for 3D surface analysis
- QV Part Manager for managing the execution of parts programs of multiple parts
- Easypag-Pro for offline generation of part programs from 2D CAD data
- QV3DCAD-online for online generation of part programs from 3D CAD files
- MeasurLink for statistical process control (SPC)
- QV3DPAK for 3D topography measurements (see explanation below)
- For more information refer to the Vision Measuring Machines brochures

Optional PFF Function (Points From Focus)

- PFF enhances the functionality of standard QV models with 3D topography measurements
- No additional sensor necessary
- High scanning range in Z axis from 2,7 mm upto 40,6 mm depending on the objective lens in use and in wide range mode
- PFF is a retro fittable option for Quick Vision ELF, Quick Vision APEX/HYPER, Quick Vision ACCEL and Quick Vision ULTRA.
  Please contact your local Mitutoyo office for more detailed information.

Workpiece to be measured with PFF

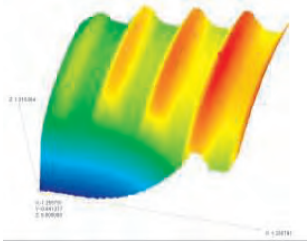

3D Analysis of PFF measurement

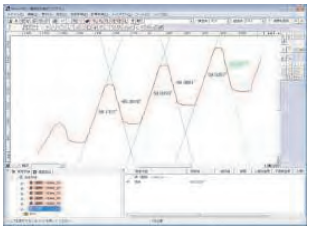

2D Analysis of PFF measurement

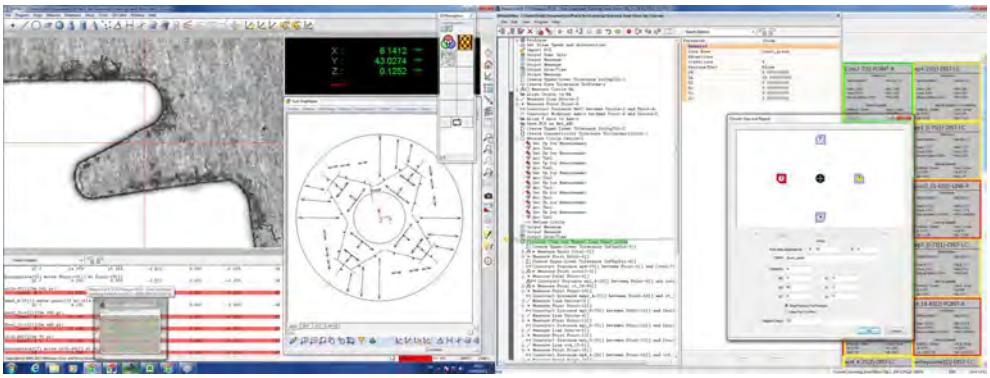

Example of the QVPAK screen layout.

All products to be sold to commercial customers. Product illustrations are without obligation. Product descriptions, in particular any and all technical specifications, are only binding when explicitly agreed upon. For suggested retail prices, please refer to the separate price list.

Mitutoyo

Accessories for Quick Vision Systems

Touch Probe Option - Series 364 or Retrofit

An optional touch probe (TP) is available for following QV models:
Quick Vision-ACTIVE; Quick Vision-APEX ; Quick Vision-HYPER ; Quick Vision-ACCEL.

- The Quick Vision-TP system allows you to carry out both non-contact and contact measurements.
- Compatible with Renishaw Touch Probe TP 20 or TP 200.
- An optional MCR20 rack for storing probe modules enhances functionality even more.

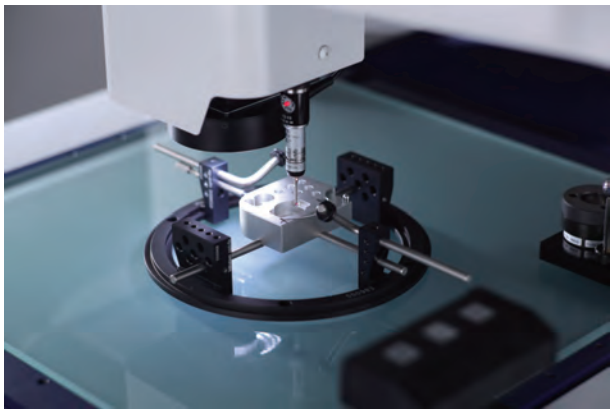

Quick Vision ACTIVE with Touch Probe option

Quick Vision-APEX with Touch Probe option

TP20
Compact stylus change type.

TP200
Compact and high accuracy stylus change type

Styli kit M2
Starter

Quick Vision-ACTIVE models

QV-APEX and HYPER models

Quick Vision Accel models

Refer to the Quick Vision brochure

All products to be sold to commercial customers. Product illustrations are without obligation. Product descriptions, in particular any and all technical specifications, are only binding when explicitly agreed upon. For suggested retail prices, please refer to the separate price list.

Accessories for Quick Vision Systems

Tracking Auto Focus

Tracking Auto Focus Function TTL (Through The Lens) *

For Quick Vision-APEX, Quick Vision-HYPER, Quick Vision-STREAM PLUS, Quick Vision-ULTRA
The Tracking Auto Focus unit (TAF) allows stable, high-speed measurement in the Z-axis, due to the Knife-edge method adopted in the detection system.
The TAF function tracks the waviness and warp of the workpiece surface in Z direction and enhances throughput compared with normal measuring mode.
When TAF is used on a Quick Vision Stream Plus model, fully non-stop measurements become possible.

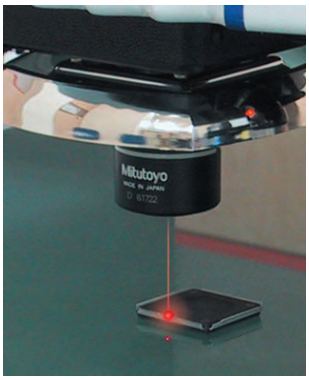

Coaxial laser Tracking Auto Focus (TAF)

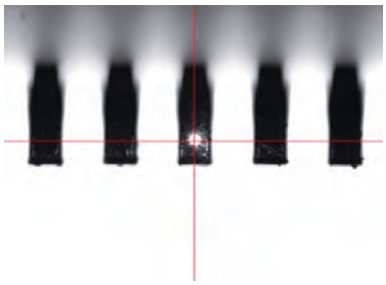

Laser spot of Tracking Auto Focus system (TAF)

Measurement example : Height of leads on a QFP package

TAF (Tracking Auto Focus)*

No.	Objective lens	Tracking range [mm]	Laser spot diameter [µm]
TAF-HR2,5X	QV-HR2,5X	±0,5	2,1
TAF-SL2,5X	QV-SL2,5X	±0,5	3,1
TAF-5X	QV-5X	±0,125	1,5
TAF-HR1X	QV-HR1X	±3,15	5,2
TAF-SL1X	QV-SL1X	±3,15	8

*factory option

Specifications

QV Index Head	Automatic multi-plane measurement is possible with the optional index table
Min. rotation angle	0,1 °
Max. rotation speed	10 rpm
Positioning Accuracy	±0,5°
Max. workpiece ø [mm]	140

QV Index Head

Using the QV Index to rotate the workpiece makes it possible to automatically measure multiple surface without having to dismount/remount the workpiece.

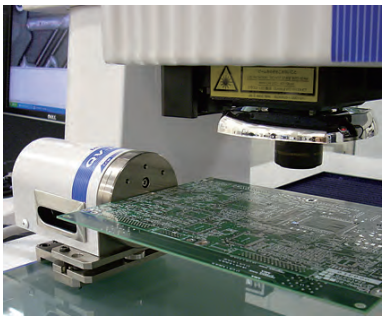

All products to be sold to commercial customers. Product illustrations are without obligation. Product descriptions, in particular any and all technical specifications, are only binding when explicitly agreed upon. For suggested retail prices, please refer to the separate price list.

Objective Lenses and Calibration Charts

Objective Lenses and Calibration Charts

No.	Model
02ALT630	QV WLI A-10X
02ALT670	QV WLI A-25X
02ALY400	QV WLI A-5X

1. QV-Objective lens - HR and SL (Long Working Distance) models

No.	Magnification	NA (2)	Model	Turret lens Mag. QV	Monitor Mag. QV	Working distance [mm]
02AKT199	0,5X		QV-SL0,5X	1X 2X 6X	16X 32X 96X	30,5
02ALA150	1X		QV-SL1X	1X 2X 6X	32X 64X 192X	52,5
02ALA170	2,5X		QV-SL2,5X	1X 2X 6X	80X 160X 480X	60
02ALA420	5X		QV-5X	1X 2X 6X	160x 320X 960X	33,5
02ALG010	10X		QV-SL10X	1X 2X 6X	320X 640X 1920X	30,5
02ALG020	25X		QV-25X	1X 2X 6X	800X 1600X 4800X	13
02AKT250	1X	0,084	QV-HR1X	1X 2X 6X	32X 64X 192X	40,6
02AKT300	2,5X	0,21	QV-HR2,5X	1X 2X 6X	80X 160X 480X	40,6
02AKT650	10X	0,42	QV-HR10X	1X 2X 6X	320X 640X 1920X	20

Other Accessories

Machine Stands

No.	Model
02ATN695	Calibration chart with holder
02ATN697	Compensation chart with holder

Additional Specifications

Remarks
- The monitor magnifications are approximate values.
- QV-10X, QV-25X : Depending on the workpiece the illumination may be insufficient at a turret lens magnification of 2X and 6X for QV models.
- QV-25X : The PRL illumination is restricted in its usable position.

Calibration Glass chart & Compensation glass chart with holder
A calibration or compensation chart is used to calibrate or compensate for the pixel size of the CCD sensor, autofocus accuracy and the optical axis offset at each magnification of the Programmable Power Turret (PPT) or of the zoom.

All products to be sold to commercial customers. Product illustrations are without obligation. Product descriptions, in particular any and all technical specifications, are only binding when explicitly agreed upon. For suggested retail prices, please refer to the separate price list.

Modular Clamping System OPTI-FIX

Holding a cylindrical part between clamping tips.

The modular clamping system for vision measuring systems

This modular and flexible clamping system is ideal for use with vision measuring systems including profile projectors, measuring microscopes and image analysis measuring machines.
OPTI-FIX offers you the following benefits:

- The system's highly compact components enable you to keep parts in the required position during measurement.
- It enables you to make reliable repeated measurements on a batch of parts, or measurements in particular positions.
- The system elements are assembled with dovetail joints.
- You are offered a choice of several kits.

No.	Model	Description
K551056	Opti-Set Start	- Comprising 16 elements - Construction of a right-angled frame of dimensions 250x100mm
K551057	Opti-Set Basic	- Comprising 26 elements - Construction of a frame of dimensions 200x100mm
K551059	Opti-Set Advanced	- Comprising 51 elements - Construction of a frame of dimensions 400x250mm - Allows aerial positioning of parts
K551060	Opti-Set Professional	- Comprising 115 elements - Construction of frame of dimensions 400x250mm - Complete and highly versatile kit
K551058	Opti-Set Rotation	- Comprising 23 elements - Construction of frame of dimensions 250x200mm - Including accessories for holding cylindrical parts
K550298	Opti-Set Round	- Comprising 18 elements allowing aerial positioning of complex parts - This kit is supplied in a case (see photo below)
K550989	Adjustable magnetic clamp	Only 3 clamps are necessary to hold the OPTI-FIX clamping system to the machine surface

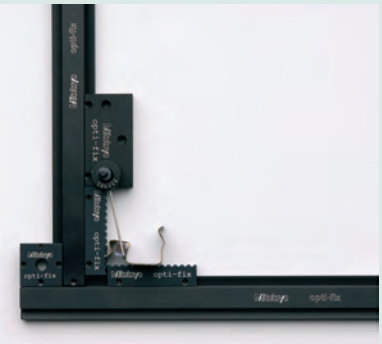

Toothed rule that lets light pass
Spring flange locking the part in the measurement position.

Opti-Set Round

Batch measurement of identical parts placed against the right-angled frame.

Refer to the OPTI-FIX brochure

All products to be sold to commercial customers. Product illustrations are without obligation. Product descriptions, in particular any and all technical specifications, are only binding when explicitly agreed upon. For suggested retail prices, please refer to the separate price list.

Modular Clamping System OPTI-FIX

OPTI-FIX Clamping System

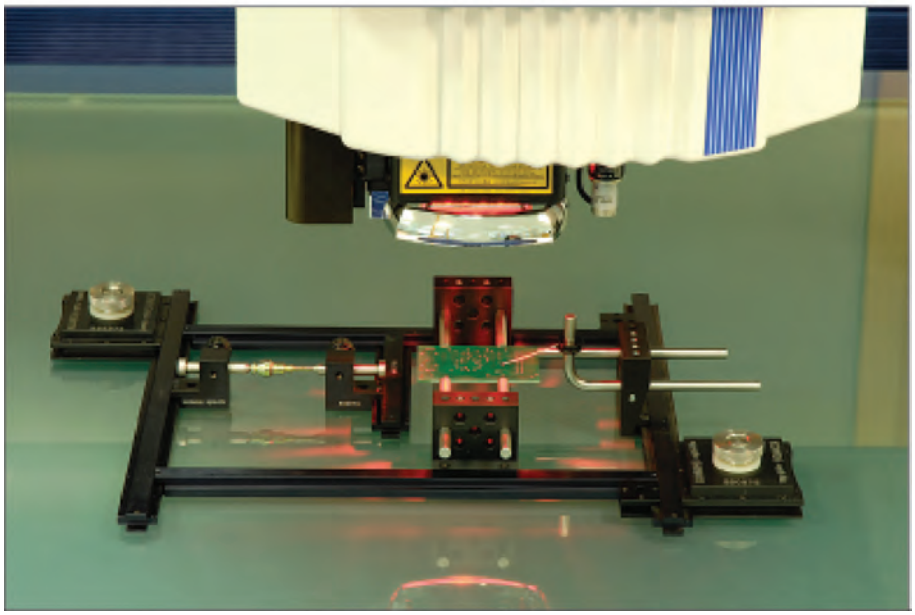

Electronic board raised to give clearance for the components on its underside. Placed directly on the glass stage of the machine without the OPTI-FIX clamping system, the electronic board would not lie flat. The set-up is held on the glass surface by 2 suction

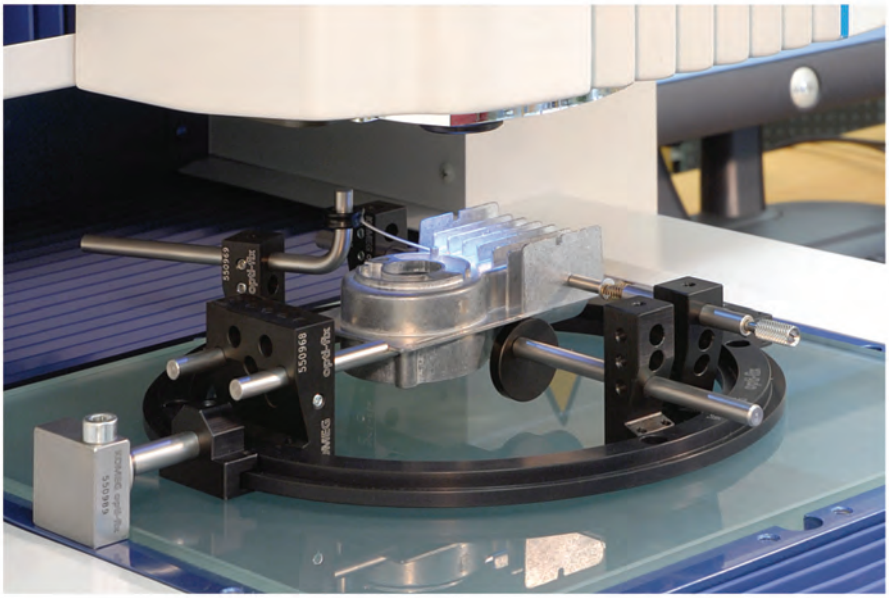

Example of application for holding prismatic parts (without the OPTI-FIX clamping system, the part could not be positioned correctly). The set-up is held on the glass surface by a magnetic clamp attached to the stage frame.

Mini-vice (internal-external)

Precision quick chuck

Clamping jaw

Jaw tip ø0-2

Jaw tip ø1-3

Jaw tip ø4-5

Perpendicular jaw tip

OPTI-FIX brochure on request

All products to be sold to commercial customers. Product illustrations are without obligation. Product descriptions, in particular any and all technical specifications, are only binding when explicitly agreed upon. For suggested retail prices, please refer to the separate price list.

Batteries
Page 612

Washers, Anvils
Page 612

Mirrors, Stage Glass
Page 613

Paper Rolls, Ink Ribbons, Bulbs
Page 614

All products to be sold to commercial customers. Product illustrations are without obligation. Product descriptions, in particular any and all technical specifications, are only binding when explicitly agreed upon. For suggested retail prices, please refer to the separate price list.

Batteries

Batteries

No.	To fit product	Product No.	Description
011037	QM-Height DP-1DX Digi-Test DP-1VR DP-1VR (UK only)	**518-22x** **264-501** **209-5xx** **264-504-5D** **264-504-5E**	4 x LR-6
011076	DP-1HS	**264-503**	4 x
011263	Indicator	**209-xxx**	1 x LCR-123A
011372	Contact Block	**900xxx**	2 x
05SAA217D	Height Gauge	**192-6xx**	1 x CR-2032
352011	MST201/401/402	**178-121/178-907**	1 x
938882	Micrometer/Caliper Height Gauge Height Gauge	**All models** **192-6xx** **570-xxx**	1 x SR-44
353489	MST-501 CBH-400	**178-961** **218-982**	3 x LR-14

Washers, Anvils

Carbide-tipped Anvils for Series 511

No.	Measuring range (inside)	Anvil number
21DZA213A	18/35 mm	1
21DZA213B	18/35 mm	2
21DZA213C	18/35 mm	3
21DZA213D	18/35 mm	4
21DZA213E	18/35 mm	5
21DZA213F	18/35 mm	6
21DZA213G	18/35 mm	7
21DZA213H	18/35 mm	8
21DZA213J	18/35 mm	9
21DZA232A	35/60 mm or 50/150 mm	1
21DZA232B	35/60 mm or 50/150 mm	2
21DZA232C	35/60 mm or 50/150 mm	3
21DZA232D	35/60 mm or 50/150 mm	4
21DZA232E	35/60 mm or 50/150 mm	5
21DZA232F	35/60 mm or 50/150 mm	6
21DZA232G	50/150 mm	7
21DZA232H	50/150 mm	8
21DZA232J	50/150 mm	9
21DZA232L	50/150 mm	10
21DZA232M	50/150 mm	11
102178	Extension for 35/150 mm	

Replacement Washers for Series 511

Thickness 0,5 mm	Thickness 1 mm	Thickness 2 mm	Thickness 3 mm
No.	No.	No.	No.
205457 **205623**	**205458** **205624**	**205459**	**205460**

All products to be sold to commercial customers. Product illustrations are without obligation. Product descriptions, in particular any and all technical specifications, are only binding when explicitly agreed upon. For suggested retail prices, please refer to the separate price list.

Mirrors, Stage Glass

Projection Lenses for Profile Projectors

PJ250

Magnification	Lens	Oblique illumination mirror assembly	Oblique illumination mirror
	No.	No.	No.
10X	172-125	172-290	515514
20X	172-126	172-291	515515

PJ300

Magnification	Lens	Oblique illumination mirror assembly	Oblique illumination mirror
	No.	No.	No.
10X	172-202	172-292	515516
20X	172-203	172-293	515517

Stage Glass for Profile Projectors and Microscopes

No.	Dimensions [mm]
200674	ø60 mm
200662	ø66 mm
200673	ø80 x 5 mm
383141	ø84 mm
200667	ø100 x 5 mm
384111	ø180 mm
380405	96 x 96 x 5 mm
380495	154 x 96 x 5 mm
12BAE041	154 x 154 x 5 mm
510042	190 x 92 x 5 mm
515264	190 x 160 x 5 mm or 190 x 160 x 6 mm
381349	196 x 96 x 5 mm
381952	280 x 180 mm
382762	280 x 180 x 6 mm
517505	310 x 170 x 8 mm
382255	486 x 336 x 8 mm

All products to be sold to commercial customers. Product illustrations are without obligation. Product descriptions, in particular any and all technical specifications, are only binding when explicitly agreed upon. For suggested retail prices, please refer to the separate price list.

Mitutoyo

Paper Rolls, Ink Ribbons, Bulbs

Ink Ribbons

No.	Quantity	To suit product	Product No.
995446	1	MST201 MST301	178-121/921 178-127/128 178-927/928
198728	5	DP-1HS	264-503

Paper Rolls

No.	Quantity	To suit product	Product No.
353535	1	MST501	178-961
908353-1	2	MPK10 MPK100 MPK120	264-103 264-xxx 264-xxx
011074	5	DP-1HS	264-503
011046	10	MST201 MST301 MST4	178-121 178-127/178-128 178-911
09EAA082-5	5	DP-1VR DP-1VR (UK only)	264-504-5D 264-504-5E
12AAA802	10	LH-600B (thermal printer) LH-600C (thermal printer) LH-600D (thermal printer)	518-321-00 518-331-20/518-332-20 518-341-20/518-342-20
225703	10	LHN450/600/900900	518-903/904/905
12AAN052	10	LH-600E/ LH-600EG	518-351D-21/518-352D-21
270004	10	STP2 DP-1DX/1AT	178-802 264-501/502
270490	10	Multiprinter	164-515
997471	10	RA300 RA400	211-961/211-962 211-963/211-964
997662	10	RA112/122	211-921/941
998698D	10	RA114	211-705

All products to be sold to commercial customers. Product illustrations are without obligation. Product descriptions, in particular any and all technical specifications, are only binding when explicitly agreed upon. For suggested retail prices, please refer to the separate price list.

Paper Rolls, Ink Ribbons, Bulbs

Bulbs

No.	To fit product	Illumination	Description
011315			10,8V 30W
02AKJ023D	377-090-1DD		8W
101479	TM10		6,3V
11BAC224			AVK-A
162151	CF 10 (Halogen)		6V 10W
19BAA095	AVK-C MVK-E3/-G/-VL		6V 15W (10 pcs)
200672	PJ250	Surface	10V 70W
201131	PH350 PJ300 PV600	Surface or Contour	12V 150W
383038D	TM505/510		24V 2W
510187	PV600	Surface	10V 300W
512305	PH14 PH350H/353H/361H/600H (Halogen) PJ251/321/2500/3000/300H(Halogen) PJ311/PJ311 T4/Z1 (Halogen) PV600/5000/350H/500H (Halogen) PJH30/3000 (Halogen)	Surface or Contour	24V 150W
512437	PJ250H/300H (Halogen) PH350H (Halogen) PV350H/500H (Halogen)	Contour	12V 100W
513614	DR DV4 SR (Halogen)		6V 10W
513666	FS50/110 (Halogen) TM/111/301/311/321/331		6V 20W
513667N	FS50F/50L/110 (Halogen) MF200 (Halogen) HV TM111/301/311/321/331 MF505/510/1020/1030 MF505TH/510TH/1020TH/1030TH TF510F/510FW/1020F		12V 50W
515557	TM200	Contour	8V 24W
515558	TM200	Surface	8V 24W
515559	TM Illumination		8V 12W

MITUTOYO, ABSOLUTE, CONTRACER, DIGIMATIC, Ko-ga-me, LEGEX, MACH, MCOSMOS, MiCAT, M-NanoCoord, MSURF, OPTOEYE, QSPAK, QUANTUMIKE, QUICK SCOPE, QUICK VISION ACCEL, Quick Vision WLI, QVH, QVPAK, SCANPAK, STRATO-Apex, SurfaceMeasure, SURFTEST and U-WAVE are either registered trademarks or trademarks of Mitutoyo Corp. in Japan and/or other countries/regions.

MeasurLink is a registered trademark of Mitutoyo America Corp. in the United States and/or other countries/regions. KOMEG and opti-fix are registered trademarks of KOMEG Industrielle Meßtechnik GmbH in Germany and/or other countries/regions.

Charmilles is a registered trademark of Agie Charmilles New Technologies SA. FANUC and Power Mate are registered trademarks of FANUC Corp. GE is a registered trademark General Electric Co.
Honeywell is a registered trademark of Honeywell International Inc. IBM is a registered trademark of International Business Corp. MELDAS is a registered trademark of Mitsubishi Electric Corp. Microsoft, Excel, MS-DOS, Windows and Windows Vista are either registered trademarks or trademarks of Microsoft Corporation in the United States and/or other countries. Mitsubishi is a registered trademark of Mitsubishi Corp. Panasonic, Matsushita and MINAS are registered trademarks of Panasonic Corp. RENISHAW and REVO are registered trademarks of RENISHAW PLC. ROLLS-ROYCE is a registered trademark of Rolls-Royce Motor Cars Ltd. Siemens is a registered trademark of Siemens AG. System 3R is a registered trademark of System 3R International AB. Turbomeca is a registered trademark of Turbomeca. Yaskawa is a registered trademark of Kabushiki Kaisha Yaskawa Denki. YouTube is a registered trademark of Google Inc.

Other product, company and brand names mentioned herein are for identification purposes only and may be the trademarks of their respective holders.

Mitutoyo in Europe

As Europe has become more integrated, a huge and vital market is being created. Mitutoyo is well placed for the integrated expansion of the European market. Under the strategic direction of Mitutoyo Europe GmbH there is a large production, sales and service network at your disposal, with (at present) more than 85 offices in 33 European countries.

Our leading market representation ensures that Mitutoyo's customers can take full advantage of the potential of the opportunities in this growing market - several integrated supply chain service functions supporting our dealer partners and commercial customers. We provide our clients on-site service in the areas of demand planning, integrated supply systems, distribution management, warehousing and fleet management.

Mitutoyo guarantees its service for installation, calibration, inspection and repair. From the smallest caliper towards the largest measuring device, just rely on our service. Moreover we support international customers with multilingual staff. A Japanese company opening a facility in Europe? Mitutoyo trains your staff in the Japanese language. A German company relocates capital equipment to a new plant in Russia? Mitutoyo supports your staff in Russia in the German language. Mitutoyo is where you are!

Research and development

Research and development is the cornerstone of our growth strategy and we are always seeking to provide innovative solutions by continually investing in our research and development capabilities. In recent times, the company has established itself as one of the world's most innovative providers of measuring technologies.

With substantial financial, technological and human investment Mitutoyo continues to develop advanced measurement solutions for quality assurance. New concepts, principles and technologies are constantly under development. Innovations are leading to continual improvement of our current products and may also form the basis of entirely new product lines.

Specialised products

If you want to accurately measure down to the micron under challenging conditions, you cannot afford mistakes in the choice of instruments and you do not want to deal with compatibility issues. Mitutoyo users have no interface problems and know they can rely on measurement systems from a supplier with one of the widest product ranges in the world.

Our current product portfolio includes more than 5000 specialised measuring instruments, from the traditional analogue micrometer to the highly accurate 3D coordinate measuring machines. The product range and Mitutoyo system solutions are optimally matched and work closely together. Mitutoyo complies with the requirements of international quality systems, including ISO 9001 and ISO / TS 16949 (automotive) and AS9100 (aerospace), as well as MSA R & R studies. This will not change in the future.

Proven quality

When it comes to quality assurance, only what is proven or what is provable matters. Your work demands guarantees regarding quality assurance.

Mitutoyo provides certificates and quality guarantees. These include a TÜV quality seal, an internationally recognised calibration certificate, guarantee card confirming IP protection, CE, etc.. With equipment that is, amongst other things, of proven high quality, you can concentrate fully on your own quality assurance.

Customised solutions

Mitutoyo stands for technological competence and ensures, in addition to sound advice, outstanding performance in project management and engineering. A good example is the M^3 Solutions concept. M^3 stands for Mitutoyo Measurement Metrology and is a service aimed at providing individual measurement solutions. This ensures we can meet the very specific needs of customers in the field related to production and integrated quality assurance.

M^3 Solutions include measurement task definition, environmental analysis and solution development including costs, project management and delivery of the plan. Additionally, you can rely on the vast experience of the largest single provider of length measurement technology to ensure your own specific requirements are met.

Training and knowledge

Do you want to know more? Then Mitutoyo is the right place. In our education and training center MIM (Mitutoyo Institute of Metrology) we offer software courses and seminars concerning the basics of 3D coordinate measuring technology, imaging metrology, surface roughness measurements and the subjects of hardness, roundness and using basic hand-held measuring tools.

All products to be sold to commercial customers. Product illustrations are without obligation. Product descriptions, in particular any and all technical specifications, are only binding when explicitly agreed upon. For suggested retail prices, please refer to the separate price list.

Apart from knowledge, MIM is also focused on the dialogue between specialists. Therefore, it is not only intended for customers of Mitutoyo, but also for all other experts in the field of manufacturing, service, education, science and research.

Technical support

Mitutoyo provides full support, especially in the area of technical customer service. We cover your needs from A to Z. Client services are extensive and range from regular maintenance of your equipment to repairing in our specialised workshops. From your first call, you benefit from the expertise of our technical customer service, even before the purchase of a measuring system. We advise you regarding the equipment specification that represents the best solution for your measurement needs. We can also show you how to get the best out of your existing equipment. We provide training in the use of our products to ensure optimal usage of software. All Mitutoyo hand-held measuring instruments sent in for repair are returned in a timely fashion after attention from our team of experienced and skilled technicians.

With this expertise and many years of experience we can advise customers with respect to maintenance, repair and calibration requirements for any other Mitutoyo measuring instrument.

Calibration by Mitutoyo
The standard for many of our clients

Through a unique international network of accredited Mitutoyo calibration laboratories we provide you with the security of metrological cross-checking between laboratories in fifteen countries, giving Mitutoyo a unique position in global metrological expertise. All fifteen calibration laboratories meet the high demands of ISO 17025.

The ISO / EC 17025 describes the general requirements for the competence of calibration laboratories. Mitutoyo performs all calibrations in accordance with this directive.

Each calibration and repair division contains a calibration laboratory enabling us to provide an optimal service in the area of calibration. To get an overview of what Mitutoyo calibration can do for you, please visit our website.

Optimisation by Mitutoyo

Part programming by Mitutoyo is a service that many of our clients benefit from. You can use our team of support specialists to help automate your measurement procedures.

Mitutoyo also offers a measurement service that may be a good solution for you if you are unable to carry it out due to lack of time, manpower or capacity. Our 3D coordinate measuring machines provide very accurate measurements and, if you wish, our specialists can write individual measurement programs for your Mitutoyo CMM.

We can provide part programming on site, thus ensuring our specialists can directly support you or your staff when writing or designing measurement programs.

All products to be sold to commercial customers. Product illustrations are without obligation. Product descriptions, in particular any and all technical specifications, are only binding when explicitly agreed upon. For suggested retail prices, please refer to the separate price list.

European Network

Since opening up the European market in the early sixties Mitutoyo has been continuously consolidating its presence in this economically important region.

We have been preparing for the expansion of the European market well in advance before it became reality to this extent. As a result, a close net of production, sales and service facilities in more than 85 establishments with different focal points is available to the customers in 33 European countries.

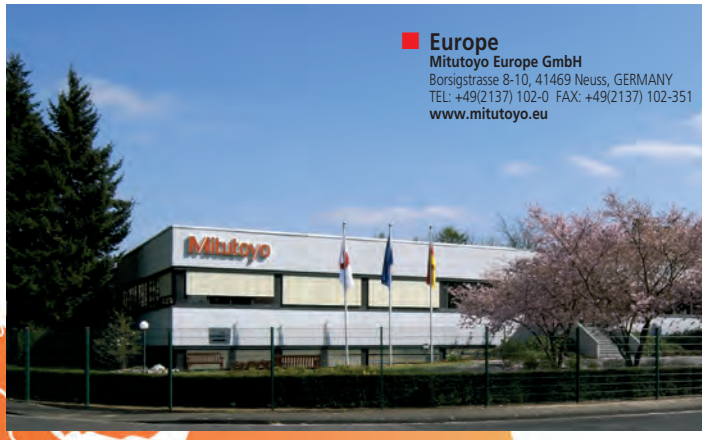

Europe
Mitutoyo Europe GmbH
Borsigstrasse 8-10, 41469 Neuss, GERMANY
TEL: +49(2137) 102-0 FAX: +49(2137) 102-351
www.mitutoyo.eu

In January 2010 Mitutoyo synchronised and strengthened the concerted pan-European activities by the establishment of an European headquarters. The location of Mitutoyo Europe GmbH is Neuss in the vicinity of Dusseldorf, Germany.

Mitutoyo Europe GmbH oversees all the activities of Mitutoyo's sales, service and production facilities throughout Europe and adjacent markets, including those of business strategies of such European operations. A Mitutoyo Europe GmbH key objective is to promote coordination amongst its European Group Companies in order to optimise its sales and technical support services in the best interests of customer satisfaction. A strong community for Europe's future.

- **Headquarter**
- **Sales Company**
- **Service Center**
- **Calibration Center**
- **M³ Solution Center**
- **Mitutoyo Institute of Metrology**
- **Research and Development Facility**
- **Manufacturing Facility**

All products to be sold to commercial customers. Product illustrations are without obligation. Product descriptions, in particular any and all technical specifications, are only binding when explicitly agreed upon. For suggested retail prices, please refer to the separate price list.

Austria

Mitutoyo Austria GmbH
Johann Roithner Straße 131, 4050 Traun, AUSTRIA
TEL: +43(0) 72 29 - 23 850 FAX: +43(0) 72 29 - 23 850 90
www.mitutoyo.at

Belgium

Mitutoyo BeNeLux • Showroom BE
Hogenakkerhoek straat 8, 9150 Kruibeke, BELGIUM
TEL: +32(0) 3-2540 444 FAX: +32(0) 3-2540 445
www.MitutoyoBeNeLux.com

Česká republika

Mitutoyo Česko s.r.o.
Dubská 1626, 415 01 Teplice, CZECH REP.
TEL: +420 417 579 866 FAX: +420 417 579 867
M³ Solution Center Ivančice
Ke Karlovu 62/10, 664 91 Ivančice, CZECH REP.
www.mitutoyo.cz

France

Mitutoyo France
Paris Nord 2-123 rue de la Belle Etoile, BP 59267 ROISSY EN FRANCE 95957 ROISSY CDG CEDEX, FRANCE
TEL: +33(1) 49 38 35 00 FAX: +33(1) 48 63 27 70
M³ Solution Center LYON
Parc Mail 523, cours du 3ème millénaire, 69791 Saint-Priest, FRANCE
TEL: +33(1) 49 38 35 70 FAX: +33(1) 49 38 35 79
M³ Solution Center STRASBOURG
Parc de la porte Sud, Rue du pont du péage, 67118 Geispolsheim, FRANCE
TEL: +33(1) 49 38 35 80 FAX: +33(1) 49 38 35 89
M³ Solution Center CLUSES
Espace Scionzier 480 Av. des Lacs, 74950 Scionzier, FRANCE
TEL: +33(1) 49 38 35 90 FAX: +33(1) 49 38 35 99
www.mitutoyo.fr

Germany

Mitutoyo Deutschland GmbH
Borsigstrasse 8-10, 41469 Neuss, GERMANY
TEL: +49(2137) 102-0 FAX: +49(2137) 86 85
M³ Solution Center Hamburg
Tempowerkring 9·im HIT-Technologiepark 21079 Hamburg, GERMANY
TEL: +49(40) 791 894-0 FAX: +49(40) 791 894-50
M³ Solution Center Leonberg
Steinbeisstrasse 2, 71229 Leonberg, GERMANY
TEL: +49(7152) 60 80-0 FAX: +49(7152) 608 060
M³ Solution Center Berlin
Paradiesstrasse 208, 12526 Berlin, GERMANY
TEL: +49(30) 26 11-267 FAX: +49(30) 26 29-209
M³ Solution Center Eisenach
im tbz Eisenach, Heinrich-Ehrhardt-Platz, 99817 Eisenach, GERMANY
TEL: +49(3691) 88 909-0 FAX: +49(3691) 88 909-9
M³ Solution Center Ingolstadt
Marie-Curie-Straße 1, 85055 Ingolstadt, GERMANY
TEL: +49(841) 95 49 20 FAX: +49(841) 95 49 250
Mitutoyo CTL Germany GmbH
Neckarstrasse 1/8, 78727 Oberndorf, GERMANY
TEL: +49(7423) 8776-0 FAX: +49(7423) 8776-99
www.mitutoyo.de

Hungary

Mitutoyo Hungária Kft.
Záhony utca 7, D-épület / fsz,
H-1031 Budapest, HUNGARY
TEL: +36(1) 21 41 447 FAX: +36(1) 21 41 448
www.mitutoyo.hu

Italy

Mitutoyo Italiana S.r.l.
Corso Europa, 7 - 20020 Lainate (MI), ITALY
TEL: +39(02) 935 781 FAX: +39(02) 93 73 290 9357 825 5
M³ Solution Center VERONA
Via A. Volta, 37062 Dossobuono (VR), ITALY
TEL: +39(045) 513 012 FAX: +39(045) 86 17 241
M³ Solution Center TORINO
Via Brandizzo, 133/F - 10088 Volpiano (TO), ITALY
TEL: +39(0) 11 91 23 995 FAX: +39(0) 11 99 53 202
M³ Solution Center CHIETI
Contrada Santa Calcagna - 66020 Rocca S. Giovanni (CH), ITALY
TEL/FAX: +39(0872) 709 217
www.mitutoyo.it

Netherlands

Mitutoyo BeNeLux • Showroom NL
Wiltonstraat 25, 3905 KW Veenendaal,
THE NETHERLANDS
TEL: +31(0) 318-534 911
www.MitutoyoBeNeLux.com

Poland

Mitutoyo Polska Sp.z o.o.
ul. Graniczna 8 A, 54-610 Wrocław, POLSKA
TEL: +48(71) 354 83 50 FAX: +48(71) 354 83 55
www.mitutoyo.pl

Romania

Mitutoyo Romania SRL
Strada Drumul Garii Odai Nr. 1A
Showroom, Parter
075100 OTOPENI- ILFOV, ROMANIA
TEL: +(40) 311 012 088 FAX: +(40) 311 012 089
www.mitutoyo.ro

Russia

Mitutoyo RUS LLC
13 Sharikopodshipnikovskaya, bld.2, 115088 Moscow, RUSSIAN FEDERATION
TEL: +(7) 495 7450742 FAX: +(7) 495 7450742
www.mitutoyo.ru

Sweden

Mitutoyo Scandinavia AB
Släntvägen 6, 194 54 Upplands Väsby, SWEDEN
TEL: +46(0) 8 594 109 50 FAX: +46(0) 8 590 924 10
M³ Solution Center Alingsås
Kristineholmsvägen 26, 441 39 Alingsås, SWEDEN
TEL: +46(0) 8 594 109 50 FAX: +46(0) 322 63 31 62
M³ Solution Center Värnamo
Storgatsbacken 1, 331 30 Värnamo, SWEDEN
TEL: +46(0) 8 594 109 50 FAX: +46(0) 370 463 34
www.mitutoyo.se
M 3 Solution Center Pirkkala
Viherkiitäjä 2A, 33960 Pirkkala, FINLAND
Tel: +358 (0) 20 792 9640
www.mitutoyo.fi

Switzerland

Mitutoyo (Schweiz) AG
Steinackerstrasse 35, 8902 Urdorf, SWITZERLAND
TEL: +41(0) 447 361 150 FAX: +41(0) 447 361 151
www.mitutoyo.ch

United Kingdom

Mitutoyo (UK) L.td.
Joule Road, West Point Business Park, Andover, Hampshire SP10 3UX UNITED KINGDOM
TEL: +44(1264) 353 123 FAX: +44(1264) 354 883
M³ Solution Center Coventry
Unit6, Banner Park, Wickmans Drive, Coventry, Warwickshire CV4 9XA, UNITED KINGDOM
TEL: +44(2476) 426 300 FAX: +44(2476) 426 339
M³ Solution Center Halifax
Lowfields Business Park, Navigation Close, Elland, West Yorkshire HX5 9HB, UNITED KINGDOM
TEL: +44(1422) 375 566 FAX: +44(1422) 328 025
M³ Solution Center East Kilbride
The Baird Bulding, Rankine Avenue, Scottish Enterprise Technology Park, East Kilbride G75 0QF, UNITED KINGDOM
TEL: +44(1355) 581 170 FAX: +44(1355) 581 171
www.mitutoyo.co.uk

All products to be sold to commercial customers. Product illustrations are without obligation. Product descriptions, in particular any and all technical specifications, are only binding when explicitly agreed upon. For suggested retail prices, please refer to the separate price list.

Mitutoyo

Numerical Index

Series No.	Description	Page
0 - 199		
011	Battery	612
011	CMM Software	561
011	Digimatic Data Logger -1000/1000 M	32
011	DIGIMATIC Extension cable	22
011	DMX-1	28
011	DMX-16 / DMX-16 C	30
011	DMX-2	28, 29
011	DMX-3	27, 29, 31
011	DMX-8	30
011	Joint Magnetic Stand	305
011	Timerbox	31
011	Tolerance Box	33
011 / 076	Flexible Joint Arm	306
02	Sensorpak	361
02A	Accessories for Quick Vision	607
02A	Vision accessories	608
02AZD	Measurement Data Wireless : U-Wave	25
02AZE	Measurement Data Wireless : U-Wave	26
05	Optional Accessory for Calipers	203
06ADV	USB Input Tool Direct (Digimatic USB cable)	23
06AEN	USB-ITPAK	24
0944	DRO Extension cables	411
1	Dial Indicator	248, 249, 264
1	One Revolution Dial Indicator	250
101	Ball attachment	100
101	Indicator accessories	271
102	Outside Micrometer	45
102	Ratchet Thimble Micrometer	44
103	Outside Micrometer	46, 47
104	Outside Micrometer interchangeable anvils	50
105	Outside Micrometer adjustable anvil	52
107	Dial Gauge Micrometer	91
110	Head	124
111	Spline Micrometer	71
112	Point Micrometer	76
113	Limit Micrometer	87
114	V-Anvil Micrometer	82
115	Tube Micrometer	74
116	Universal Micrometer	58
117	Micrometer Interchangeable anvil	86
118	Sheet Metal Micrometer	54
119	Sheet Metal Micrometer Graduated Dial	55
120	Contact point	268
120	Indicator accessories	267, 269
122	Blade Micrometer	80
123	Disc Micrometer	66
124	Gear Tooth Micrometer	64
125	Screw Thread Micrometer	62
126	Screw Thread Micrometer	60, 61
128	Depth Micrometer	205
129	Depth Micrometer	206
133	2-Point Inside Micrometer	143, 144
136	Indicator accessories	273
137	2-Point Inside Micrometer	145
139	2-Point Inside Micrometer	146
140	2-Point Inside Micrometer	147
141	2-Point Inside Micrometer	150
143	Caliper Jaw Micrometer	57
145	2-Point Inside Micrometer	142
146	Groove Micrometer	93
147	Can Seam Micrometer	83
147	Hub Micrometer	84
147	Wire Micrometer	84
148	Head 13 mm	114, 115, 116
148	Head 5/6,5 mm	109, 110
148	Head 6,5/13 mm	111, 112
148	Head 6,5 mm	113
149	Head 15 mm	117
150	Head 25 mm	118
151	Head 25/50 mm	120
152	Head	121, 122, 123
153	Head	126
153	Head non-rotating spindle	125
154	Small Hole Gauge Set	163
155	Telescopic Gauge Set	163
156	Micrometer Stands	98
157	Optical Parallels	101
158	Optical Flats	102
160	Metric Workshop Vernier Caliper	185
164	DIGIMATIC non-rotating head	105
167	Micrometer Setting	94, 95, 96
169	Disc Micrometer non-rotating spindle type	69
170	Calibration Tester	337
170	i-Checker Calibration Tester	338
172	Mirrors for Profile Projectors	613
172	PH-3515F Profile Projector	471, 472
172	PH-A14 Profile Projector	469, 470
172	Workpiece Fixtures	478
174	KA-Counter	409
174	KLD200 Counter	410
176	Accessories Microscope MF-U	444
176	Accessory for Measuring Microscope	446
176	Hyper MF/MF-U Measuring Microscope	448, 449
176	Measuring Microcope MF D-Series	436
176	Measuring Microscope MF D-Series	434
176	Measuring Microscope MF-U D-Series	442, 445
176	MF Measuring Microscope	430, 431, 432, 433, 435
176	MF-U Measuring Microscope	437, 438, 439, 440, 441
176	Reticles for Measuring Microscope TM-500	429
176	TM-500 Measuring Microscope	426, 427, 428
177	Setting Rings	164
178	Accessories for SJ-210 and SJ-310	484, 485
178	Optional Accessories for Surftest, Contracer, Formtracer	516, 517
178	Optional Software USB Communication Tool	508
178	Optional Styli for Surftest and Formtracer SV-C series	509, 510, 511, 512, 513
178	Surftest Extreme SV-3000CNC	493
178	Surftest Extreme SV-M3000CNC	494
178	Surftest SJ-210	480, 481
178	Surftest SJ-210 and SJ-310 - S-Type	483
178	Surftest SJ-310	482
178	Surftest SJ-410	486, 487
178	Surftest SJ-500 and SJ-500P	488, 490
178	Surftest SV-2100 and SV-2100P	489, 490
178	Surftest SV-3100	492
178	Surftest SV-3200	491
180	Combination Square Set	317
181	Hardened Double V-Block	314
181	Magnetic Double V-Block	314
182	Standard Scales	335, 336
182	Steel Rule	323
183	Pocket Magnifiers	425
183	Precision Magnifier	424
184	Thickness Gauge	321
187	Bevel Protractor	318, 319
191	CRYSTA-APEX	568
191	CRYSTA-Apex S 1200 Series	567
191	MiSTAR Series	566
192	Dial Height Gauge	222
192	DIGIMATIC Height Gauge	225, 226
193	Digit Outside Micrometer	48
196	CRYSTA-PLUS M	565
197	Head non-rotating spindle	126
19BAA	Hardness Indenters	554
200 - 299		
2	Dial Indicator	251, 252, 253, 254, 255, 256, 257, 265
2	Indicator accessories	273

Series No.	Description	Page
2	One Revolution Dial Indicator	258, 259, 260
200	Table Glass	613
201	Dial Snap Gauges	92
205	Discs for Series 511	612
207	Oil Micrometer	99
208	Spindle for Micrometer	100
209	Dial Caliper Gauge	292, 294
209	DIGIMATIC Caliper Gauge	293, 295, 296, 297
211	Optional Accessories for Roundtest	534
211	Optional Styli for Roundtest	532, 533
211	Roundtest Extreme RA-2200CNC	529
211	Roundtest Extreme RA-H5200CNC	530, 531
211	Roundtest RA-10	519, 520
211	Roundtest RA-120 and RA-120P	521, 522
211	Roundtest RA-1600	523, 524
211	Roundtest RA-2200	525, 526
211	Roundtest RA-H5200	527, 528
215	Gage Stand with granite base	304
215	Gauge Stand	302
215 / 7	Gage Stand with Square Hardened Steel Anvil	301
218	Contracer CV-2100	495, 496
218	Contracer CV-3200 and CV-4500	497, 498
218	Optional Styli and Arms for Contracer and Formtracer SV-C series	514, 515
21AAA	Indicator accessories	266, 267, 268, 270
21AZB	Indicator accessories	272
21CZA	Lever Indicator accessories	286
21DZA	Keys for Series 511	612
227	ABSOLUTE Digimatic Micrometer QuickMike	68
227	Quick DIGIMATIC Micrometer	43
250	Micrometer Head	108
264	Data Processing Unit QM-Data 200	473
264	DP-1VR DIGIMATIC mini-processor	20
264	MUX-10F Transmitter	30
264	USB Input Tool - Keyboard Interface	27
270	Paper Rolls	614
293	ABSOLUTE DIGIMATIC Micrometer QuickMike	42
293	DIGIMATIC Micrometer	37, 38, 39
293	DIGIMATIC Micrometer QuantuMike	36
293	Digi Micrometer	40
293	High-Accuracy Digimatic Micrometer	35
300 - 399		
3	Dial Indicator	261, 262
302	PJ-A3000 Profile Projector	462, 463
303	Head Fixtures	127
303	PJ-H30 Profile Projector	464, 465, 466
303/304	Outside Micrometer interchangeable anvils	51
304	PV-5110 Profile Projector	467, 468
313	3-Wire units	97
314	DIGIMATIC V-Anvil Micrometer	81
317	Micrometer Interchangeable anvil	85
318	Litematic	380, 381
323	DIGIMATIC Disc Micrometer	65
324	Gear Tooth Micrometer	63
324	Interchangeable Anvils for Micrometer Series	64
326	DIGIMATIC Screw Thread Micrometer	59
329	DIGIMATIC Depth Micrometer	207
331	DIGIMATIC Spline Micrometer	70
332	OPTOEYE Edge Sensor	474
337	DIGIMATIC 2-Point Inside Micrometer	148
339	DIGIMATIC 2-Point Inside Micrometer	149
340	DIGIMATIC Micrometer interchangeable anvils	49
342	DIGIMATIC Crimp Height Micrometer	77
342	DIGIMATIC Point Micrometer	75
343	DIGIMATIC Caliper Jaw Micrometer	56
345	DIGIMATIC 2-Point Inside Micrometer	141
350	DIGIMATIC Head	106, 107
350	Head plan	103, 104
355	FALCIO-APEX 2000/3000 Series	572

Series No.	Description	Page
355	STRATO-APEX	569, 570
356	LEGEX	571
357	MACH-KO-GA-ME	573
359	Quick Scope	589, 591
359	Vision Unit	450
360	MACH	574, 575
363	Quick Vision	593, 594, 595, 596, 598
363	Quick Vision Accel	597
363	Quick Vision WLI	602
364	Touch Probe Option	606
365	Quick Vision	599, 600, 601
368	3-Point Inside Micrometer	133, 134, 135, 136
369	ABSOLUTE DIGIMATIC Disc Micrometer Quickmike	68
369	DIGIMATIC Disc Micrometer non-rotating spindle type	67
375	Objectives Lens ML-Series	454
378	Accessory for Measuring Microscope	447
378	Eyepieces	454
378	FS70 Microscope Unit	451
378	Objectives	455, 456, 457, 458, 459, 460, 461
378	Video Microscope Unit VMU Series	453
378	VMU Video Microscope Unit	452
389	DIGIMATIC Sheet Metal Micrometer	53
395	DIGIMATIC Tube Micrometer	72, 73
400 - 499		
4	Dial Indicator	263
406	Micrometer non rotating spindle	41
422	DIGIMATIC Blade Micrometer	78, 79
468	DIGIMATIC 3-Point Inside Micrometer	129, 131, 132
500 - 599		
500	ABSOLUTE Digimatic Caliper	168
500	ABSOLUTE Digimatic Caliper for large measuring range	172
500	ABSOLUTE Digimatic Caliper IP67	166
500	ABSOLUTE Digimatic Carbide Caliper	169
500	ABSOLUTE Digimatic Carbide Caliper IP67	167
500	ABSOLUTE Digimatic Solar Caliper	171
500	ABSOLUTE Digimatic Solar Caliper IP67	170
505	Dial Caliper	183
506	Lightweight Vernier Height Gauge	220
510	Indicating Micrometer	88
511	Bore Gauge	155, 158, 161
511	Bore Gauge Accessories	158
511	Bore Gauge for Blind Holes	160
511	Bore Gauge for Small Holes	153
511	Bore Gauge - Short Leg Type	159
511	Bore Gauge - Standard type	154, 156
511	Bore Gauge with Micrometer Head	157
513	Lever Indicator	276, 278, 279, 280, 281, 282, 283, 284
513	Lever Indicator Overview	275
514	Standard Vernier Height Gauge	221
515	Bore Gauge Checker	162
515	CERA Caliper Checker	330
515	Check Master	332, 333
515	Depth Micro Checker	329
515	Height Master	325, 327
515	Height Master accessories	328
515	Inside Micro Checker	331
515	Lamps	615
515	Universal Height Master	326
516	Carbide Gauge Block	345
516	CERA Caliper Gauge Block	352
516	CERA Gauge Block	351
516	CERA Gauge Block Set	350
516	CERA Micrometer Gauge Block	352
516	Gauge Block Accessories	356

Mitutoyo

Series No.	Description	Page
516	Maintenance Kit for Gauge Block	358
516	Micrometer Gauge Block	347
516	Presentation Gauge block	341, 342
516	Steel Caliper Gauge Block	346
516	Steel Gauge Block	343, 344, 345
516	Steel Micrometer Gauge Block	346
516	Step master	334
518	Digital Height Gauge QM-Height	229
518	Linear Height Gauge LH-600D/D	231
518	Optional Accessories Linear Height	232
518	Optional Accessory for Linear Height	230
519	Display Unit Mu-Checker	379
519	Inductive Probe Mu-Checker	378
521	Calibration Tester	337
523	Snap Gauge/Snap Micrometer	89, 90
525	Formtracer CS-3200	501, 502
525	Formtracer Extreme CS-5000CNC and CS-H5000CNC	506, 507
525	Formtracer Extreme SV-4500CNC	504
525	Formtracer SV-C3200 and SV-C4500	499, 500
525	Formtracer SV-C4500CNC	503, 505
526	Bore Gauge for Extra Small Holes	151, 152
527	Depth Gauge Hook End Type	215
527	Dial Depth Gauge	216
527	Vernier Depth Gauges	214
528	Knife Edge Straight Edge	323
530	Vernier Caliper	180
530	Vernier Caliper carbide-tipped	181
531	Vernier Caliper with thumb clamp	182
532	Vernier Caliper with fine adjustment	182
533	Vernier Caliper Nib Style and Standard Jaws	184
534	Workshop Vernier Caliper with Long jaws	186
536	Carbide Scribing Caliper	189
536	Hook Type Vernier Caliper	200, 202
536	Inside Caliper	198
536	Swivel Vernier Caliper	192
536	Tube Thickness Caliper	201
536	Vernier Blade Type Caliper	195
536	Vernier Neck Caliper	197
536	Vernier Offset Caliper	190
536	Vernier Offset Centreline Caliper	191
536	Vernier Point Caliper	194
539	CNC Linear Scale AT402E	413
539	Linear Scale AT103	400, 401, 402
539	Linear Scale AT112	405
539	Linear Scale AT113	403, 404
539	Linear Scale AT116	407
539	Linear Scale AT181	406
539	Linear Scale AT203	414
539	Linear Scale AT211	414
539	Linear Scale AT300	415
539	Linear Scale AT500	415
539	Linear Scale AT715	408
539	Overview CNC Linear Scale	412
542	Air drive Unit for Linear Gauge	372
542	Counter Digimatic instrument	377
542	Counter Linear Gage	375
542	Counter Linear Gauge	373, 374, 376
542	Digimatic Display Unit	32
542	Laser Hologage	370, 371
542	Linear Gage LGB	368
542	Linear Gage LGK	366
542	Linear Gage LGM	369
542	Linear Gauge applications	360
542	Linear Gauge LGB	367
542	Linear Gauge LGF	364
542	Linear Gauge LGF-Z	365
543	ABSOLUTE Digimatic Indicator ID-C	237
543	DIGIMATIC Indicator ID-B	245
543	Digimatic Indicator ID-C	240, 243
543	DIGIMATIC Indicator ID-C	238, 239, 242
543	DIGIMATIC Indicator ID-F	247
543	DIGIMATIC Indicator ID-H	246
543	DIGIMATIC Indicator ID-N	244
543	DIGIMATIC Indicator ID-S	235
543	DIGIMATIC Solar Indicator	234
544	Laser Scan Micrometer Optional Accessories	390, 391
544	LSM-500S	384
544	LSM-501S	384
544	LSM-503S	385
544	LSM-506S	385
544	LSM-512S	386
544	LSM-516S	386
544	LSM-5200 Display Unit	388
544	LSM-6200 Display Unit	389
544	LSM-902/6900	383
544	LSM-9506	387
546	Spring Balance	298
547	ABSOLUTE Digimatic Indicator Depth Gauge	208
547	ABSOLUTE Digimatic Quick Thickness Gauge	288, 289, 290
549	MICSYS-SA1 2D Encoder	422
550	ABSOLUTE Digimatic Caliper with Nib Style Jaws	173
5509	VARI-FIX	584
551	ABSOLUTE Digimatic Caliper with Nib Style and Standard Jaws	174
552	ABSOLUTE Digimatic Carbon Fibre Caliper IP66	175
552	ABSOLUTE Digimatic Carbon Fibre Caliper IP66 with Ceramic jaws	176
552	ABSOLUTE Digimatic Carbon Fibre Caliper IP66 with Extra long jaws	177
552	ABSOLUTE Digimatic Carbon Fibre Caliper IP66 with Interchangeable jaws	178, 179
565	Gauge Block Comparator GBCS-250	339
568	DIGIMATIC Inside Micrometer 3-Point BOREMATIC	138, 139, 140
568	DIGIMATIC Inside Micromter 3-Point BOREMATIC	137
570	ABSOLUTE DIGIMATIC Height Gauge	223, 224
571	ABSOLUTE DIGIMATIC Depth Gauge	211, 212
571	ABSOLUTE DIGIMATIC Depth Gauge Hook End Type	213
571	Tyre Tread Depth Gauge	217
572	Horizontal Linear Scale	393, 394, 395, 396
572	Vertical Linear Scale	397, 398, 399
573	ABSOLUTE Digimatic Back-Jaw Centreline Caliper	193
573	ABSOLUTE Digimatic Blade Type Caliper	195
573	ABSOLUTE Digimatic Caliper for tolerance measurement	188
573	ABSOLUTE Digimatic Caliper with constant measuring force	187
573	ABSOLUTE DIGIMATIC Inside Caliper	199
573	ABSOLUTE DIGIMATIC Neck Caliper	196
573	ABSOLUTE DIGIMATIC Offset Caliper	190
573	ABSOLUTE DIGIMATIC Offset Centerline Caliper	191
573	ABSOLUTE DIGIMATIC Point Caliper	194
573	Carbide Scribing Caliper	189
573	Inside Caliper	198
573	Tube Thickness Caliper	201
575	DIGIMATIC Indicator ID-U	236
575	Linear Gage LGD	363
575	Linear Gage LGS	362
579	CNC Linear Scale ST46-EZA	418
579	Linear Scale ABS AT1100	416, 419
579	Linear Scale ST24 / ST44	416
579	Linear Scale ST36	417
579	Linear Scale ST422	417, 420, 421

600 - 699

601	Ceraston	358
611	Gauge Block with CTE	354
611	Steel Gauge Block	348, 349
613	CERA Gauge Block	353
617	ZERO CERA Block	355
619	Gauge Block Accessories	357
64AAB	MeasurLink 7	15, 16, 17, 18
64AAS	MeasurLink 7	18, 19

Series No.	Description	Page
	700 - 799	
7	Dial Indicator Depth Gauge	209, 210
7	Head Micro jack	108
7	Indicator accessories	269, 274
7	Joint Magnetic Stand	306
7	Magnetic Stand	307, 308
7	Quick Thickness Gauge	291
7 / 011	Magnetic Base	307
7/519	Gage Stand with circular hardened steel anvil	300
700	QUICK MINI Thickness Gauge	290
	800 - 899	
810	Hardmatic HH-411	551
810	HM-210/220	536, 543
810	HR-500	546, 547
810	HV-110/120	539, 542
810	Micro-Vickers and Vickers Set	544, 545
810	Micro-Vickers Hardness HM-110/120	540, 541
810	Micro-Vickers Hardness HM-210/220	537, 538
811	Digital and Analogue Durometers HARDMATIC HH-300	552, 553
	900 - 999	
900	Indicator accessories	269, 270
900	Optional Accessories for Depth Gauge	218
900	Optional Accessory for Height Gauge	227, 228
901	Granite Surface Plates	316
901	Lever Indicator accessories	287
902	Cast Iron Surface Plates	315
902	Indicator accessories	273
903	Air drive Unit	362
905	Cable	21
910	Cast Iron V-Blocks	313
911	Cast Iron V-Blocks	313
912	Gauge Stand	303
913	Gage Stand Economy Version	302
916	90° Steel Square	322
926	Precision plug gauge set	339
930	Precision Sine	311, 312
930	Precision vice	310, 311
939	DIGIMATIC Switch box	33
950	Digital Protractor	321
960	Level	320
963	HR Rockwell	548, 549
963	HR-Rockwell	550
967	Precision Bench Centres	309
972	Measuring Angle 90°	315
985	Micrometer colour ratchets/speeders	99
995	Ink Ribbons	614
999	Overlay Chart Set	475, 476, 477
	A - Z	
`	Quick Image	587
Enclosure	Enclosure	585
Fixture	eco-fix Kit Form L	518
Fixture	eco-fix Kit Form S	518
Fixture	eco-fix Kit L	583
Fixture	eco-fix Kit Mag L	583
Fixture	eco-fix Kit Mag S	582
Fixture	eco-fix Kit quick-rail	584
Fixture	eco-fix Kit S	582
Fixture	Fixture	582
K55	OPTI-FIX	609, 610
K65	Styli Kits	579, 580, 581
LOG	CMM Software	562, 563, 564
NANO	M-NanoCoord	604
Probe	CMM PROBE	576, 578
Probe	CMM Probes	576, 577
Probe	Vision Probe System for CMMs	576
SOFT	QVPAK Vision Software	605
SOFT	Software Quick Scope QSPAK	592
SOFT	Vision Software	588
Umap	UMAP	603

Alphabetical Index

Description	Series No.	Page
2		
2-Point Inside Micrometer	133	143, 144
2-Point Inside Micrometer	137	145
2-Point Inside Micrometer	139	146
2-Point Inside Micrometer	140	147
2-Point Inside Micrometer	141	150
2-Point Inside Micrometer	145	142
3		
3-Point Inside Micrometer	368	133, 134, 135, 136
3-Wire units	313	97
9		
90° Steel Square	916	322
A		
ABSOLUTE Digimatic Back-Jaw Centreline Caliper	573	193
ABSOLUTE Digimatic Blade Type Caliper	573	195
ABSOLUTE Digimatic Caliper	500	168
ABSOLUTE Digimatic Caliper for large measuring range	500	172
ABSOLUTE Digimatic Caliper for tolerance measurement	573	188
ABSOLUTE Digimatic Caliper IP67	500	166
ABSOLUTE Digimatic Caliper with constant measuring force	573	187
ABSOLUTE Digimatic Caliper with Nib Style and Standard Jaws	551	174
ABSOLUTE Digimatic Caliper with Nib Style Jaws	550	173
ABSOLUTE Digimatic Carbide Caliper	500	169
ABSOLUTE Digimatic Carbide Caliper IP67	500	167
ABSOLUTE Digimatic Carbon Fibre Caliper IP66	552	175
ABSOLUTE Digimatic Carbon Fibre Caliper IP66 with Ceramic jaws	552	176
ABSOLUTE Digimatic Carbon Fibre Caliper IP66 with Extra long jaws	552	177
ABSOLUTE Digimatic Carbon Fibre Caliper IP66 with Interchangeable jaws	552	178, 179
ABSOLUTE DIGIMATIC Depth Gauge	571	211, 212
ABSOLUTE DIGIMATIC Depth Gauge Hook End Type	571	213
ABSOLUTE DIGIMATIC Disc Micrometer Quickmike	369	68
ABSOLUTE DIGIMATIC Height Gauge	570	223, 224
ABSOLUTE Digimatic Indicator Depth Gauge	547	208
ABSOLUTE Digimatic Indicator ID-C	543	237
ABSOLUTE DIGIMATIC Inside Caliper	573	199
ABSOLUTE Digimatic Micrometer QuickMike	227	68
ABSOLUTE DIGIMATIC Micrometer QuickMike	293	42
ABSOLUTE DIGIMATIC Neck Caliper	573	196
ABSOLUTE DIGIMATIC Offset Caliper	573	190
ABSOLUTE DIGIMATIC Offset Centerline Caliper	573	191
ABSOLUTE DIGIMATIC Point Caliper	573	194
ABSOLUTE Digimatic Quick Thickness Gauge	547	288, 289, 290
ABSOLUTE Digimatic Solar Caliper	500	171
ABSOLUTE Digimatic Solar Caliper IP67	500	170
Accessories for Quick Vision	02A	607
Accessories for SJ-210 and SJ-310	178	484, 485
Accessories Microscope MF-U	176	444
Accessory for Measuring Microscope	176	446
Accessory for Measuring Microscope	378	447
Air drive Unit	903	362
Air drive Unit for Linear Gauge	542	372
B		
Ball attachment	101	100
Battery	011	612
Bevel Protractor	187	318, 319
Blade Micrometer	122	80
Bore Gauge	511	155, 158, 161
Bore Gauge Accessories	511	158
Bore Gauge Checker	515	162
Bore Gauge for Blind Holes	511	160
Bore Gauge for Extra Small Holes	526	151, 152
Bore Gauge for Small Holes	511	153
Bore Gauge - Short Leg Type	511	159
Bore Gauge - Standard type	511	154, 156
Bore Gauge with Micrometer Head	511	157
C		
Cable	905	21
Calibration Tester	170	337
Calibration Tester	521	337
Caliper Jaw Micrometer	143	57
Can Seam Micrometer	147	83
Carbide Gauge Block	516	345
Carbide Scribing Caliper	536	189
Carbide Scribing Caliper	573	189
Cast Iron Surface Plates	902	315
Cast Iron V-Blocks	910	313
Cast Iron V-Blocks	911	313
CERA Caliper Checker	515	330
CERA Caliper Gauge Block	516	352
CERA Gauge Block	516	351
CERA Gauge Block	613	353
CERA Gauge Block Set	516	350
CERA Micrometer Gauge Block	516	352
Ceraston	601	358
Check Master	515	332, 333
CMM PROBE	Probe	576, 578
CMM Probes	Probe	576, 577
CMM Software	011	561
CMM Software	LOG	562, 563, 564
CNC Linear Scale AT402E	539	413
CNC Linear Scale ST46-EZA	579	418
Combination Square Set	180	317
Contact point	120	268
Contracer CV-2100	218	495, 496
Contracer CV-3200 and CV-4500	218	497, 498
Counter Digimatic instrument	542	377
Counter Linear Gage	542	375
Counter Linear Gauge	542	373, 374, 376
CRYSTA-APEX	191	568
CRYSTA-Apex S 1200 Series	191	567
CRYSTA-PLUS M	196	565
D		
Data Processing Unit QM-Data 200	264	473
Depth Gauge Hook End Type	527	215
Depth Micro Checker	515	329
Depth Micrometer	128	205
Depth Micrometer	129	206
Dial Caliper	505	183
Dial Caliper Gauge	209	292, 294
Dial Depth Gauge	527	216
Dial Gauge Micrometer	107	91
Dial Height Gauge	192	222
Dial Indicator	1	248, 249, 264
Dial Indicator	2	251, 252, 253, 254, 255, 256, 257, 265
Dial Indicator	3	261, 262
Dial Indicator	4	263
Dial Indicator Depth Gauge	7	209, 210
Dial Snap Gauges	201	92
DIGIMATIC 2-Point Inside Micrometer	337	148
DIGIMATIC 2-Point Inside Micrometer	339	149
DIGIMATIC 2-Point Inside Micrometer	345	141
DIGIMATIC 3-Point Inside Micrometer	468	129, 131, 132
DIGIMATIC Blade Micrometer	422	78, 79
DIGIMATIC Caliper Gauge	209	293, 295, 296, 297
DIGIMATIC Caliper Jaw Micrometer	343	56
DIGIMATIC Crimp Height Micrometer	342	77
Digimatic Data Logger -1000/1000 M	011	32
DIGIMATIC Depth Micrometer	329	207
DIGIMATIC Disc Micrometer	323	65

Description	Series No.	Page
DIGIMATIC Disc Micrometer non-rotating spindle type	369	67
Digimatic Display Unit	542	32
DIGIMATIC Extension cable	011	22
DIGIMATIC Head	350	106, 107
DIGIMATIC Height Gauge	192	225, 226
DIGIMATIC Indicator ID-B	543	245
DIGIMATIC Indicator ID-C	543	238, 239, 242
Digimatic Indicator ID-C	543	240, 243
DIGIMATIC Indicator ID-F	543	247
DIGIMATIC Indicator ID-H	543	246
DIGIMATIC Indicator ID-N	543	244
DIGIMATIC Indicator ID-S	543	235
DIGIMATIC Indicator ID-U	575	236
DIGIMATIC Inside Micrometer 3-Point BOREMATIC	568	138, 139, 140
DIGIMATIC Inside Micromter 3-Point BOREMATIC	568	137
DIGIMATIC Micrometer	293	37, 38, 39
DIGIMATIC Micrometer interchangeable anvils	340	49
DIGIMATIC Micrometer QuantuMike	293	36
DIGIMATIC non-rotating head	164	105
DIGIMATIC Point Micrometer	342	75
DIGIMATIC Screw Thread Micrometer	326	59
DIGIMATIC Sheet Metal Micrometer	389	53
DIGIMATIC Solar Indicator	543	234
DIGIMATIC Spline Micrometer	331	70
DIGIMATIC Switch box	939	33
DIGIMATIC Tube Micrometer	395	72, 73
DIGIMATIC V-Anvil Micrometer	314	81
Digi Micrometer	293	40
Digital and Analogue Durometers HARDMATIC HH-300	811	552, 553
Digital Height Gauge QM-Height	518	229
Digital Protractor	950	321
Digit Outside Micrometer	193	48
Disc Micrometer	123	66
Disc Micrometer non-rotating spindle type	169	69
Discs for Series 511	205	612
Display Unit Mu-Checker	519	379
DMX-1	011	28
DMX-16 / DMX-16 C	011	30
DMX-2	011	28, 29
DMX-3	011	27, 29, 31
DMX-8	011	30
DP-1VR DIGIMATIC mini-processor	264	20
DRO Extension cables	0944	411
e		
eco-fix Kit Form L	Fixture	518
eco-fix Kit Form S	Fixture	518
eco-fix Kit L	Fixture	583
eco-fix Kit Mag L	Fixture	583
eco-fix Kit Mag S	Fixture	582
eco-fix Kit quick-rail	Fixture	584
eco-fix Kit S	Fixture	582
E		
Enclosure	Enclosure	585
Eyepieces	378	454
F		
FALCIO-APEX 2000/3000 Series	355	572
Fixture	Fixture	582
Flexible Joint Arm	011 / 076	306
Formtracer CS-3200	525	501, 502
Formtracer Extreme CS-5000CNC and CS-H5000CNC	525	506, 507
Formtracer Extreme SV-4500CNC	525	504
Formtracer SV-C3200 and SV-C4500	525	499, 500
Formtracer SV-C4500CNC	525	503, 505
FS70 Microscope Unit	378	451
G		
Gage Stand Economy Version	913	302
Gage Stand with circular hardened steel anvil	7/519	300
Gage Stand with granite base	215	304
Gage Stand with Square Hardened Steel Anvil	215 / 7	301

Description	Series No.	Page
Gauge Block Accessories	516	356
Gauge Block Accessories	619	357
Gauge Block Comparator GBCS-250	565	339
Gauge Block with CTE	611	354
Gauge Stand	215	302
Gauge Stand	912	303
Gear Tooth Micrometer	124	64
Gear Tooth Micrometer	324	63
Granite Surface Plates	901	316
Groove Micrometer	146	93
H		
Hardened Double V-Block	181	314
Hardmatic HH-411	810	551
Hardness Indenters	19BAA	554
Head	110	124
Head	152	121, 122, 123
Head	153	126
Head 13 mm	148	114, 115, 116
Head 15 mm	149	117
Head 25/50 mm	151	120
Head 25 mm	150	118
Head 5/6,5 mm	148	109, 110
Head 6,5/13 mm	148	111, 112
Head 6,5 mm	148	113
Head Fixtures	303	127
Head Micro jack	7	108
Head non-rotating spindle	153	125
Head non-rotating spindle	197	126
Head plan	350	103, 104
Height Master	515	325, 327
Height Master accessories	515	328
High-Accuracy Digimatic Micrometer	293	35
HM-210/220	810	536, 543
Hook Type Vernier Caliper	536	200, 202
Horizontal Linear Scale	572	393, 394, 395, 396
HR-500	810	546, 547
HR Rockwell	963	548, 549
HR-Rockwell	963	550
Hub Micrometer	147	84
HV-110/120	810	539, 542
Hyper MF/MF-U Measuring Microscope	176	448, 449
i		
i-Checker Calibration Tester	170	338
I		
Indicating Micrometer	510	88
Indicator accessories	101	271
Indicator accessories	120	267, 269
Indicator accessories	136	273
Indicator accessories	2	273
Indicator accessories	21AAA	266, 267, 268, 270
Indicator accessories	21AZB	272
Indicator accessories	7	269, 274
Indicator accessories	900	269, 270
Indicator accessories	902	273
Inductive Probe Mu-Checker	519	378
Ink Ribbons	995	614
Inside Caliper	536	198
Inside Caliper	573	198
Inside Micro Checker	515	331
Interchangeable Anvils for Micrometer Series	324	64
J		
Joint Magnetic Stand	011	305
Joint Magnetic Stand	7	306
K		
KA-Counter	174	409
Keys for Series 511	21DZA	612
KLD200 Counter	174	410

Mitutoyo

Description	Series No.	Page
Knife Edge Straight Edge	528	323
L		
Lamps	515	615
Laser Hologage	542	370, 371
Laser Scan Micrometer Optional Accessories	544	390, 391
LEGEX	356	571
Level	960	320
Lever Indicator	513	276, 278, 279, 280, 281, 282, 283, 284
Lever Indicator accessories	21CZA	286
Lever Indicator accessories	901	287
Lever Indicator Overview	513	275
Lightweight Vernier Height Gauge	506	220
Limit Micrometer	113	87
Linear Gage LGB	542	368
Linear Gage LGD	575	363
Linear Gage LGK	542	366
Linear Gage LGM	542	369
Linear Gage LGS	575	362
Linear Gauge applications	542	360
Linear Gauge LGB	542	367
Linear Gauge LGF	542	364
Linear Gauge LGF-Z	542	365
Linear Height Gauge LH-600D/D	518	231
Linear Scale ABS AT1100	579	416, 419
Linear Scale AT103	539	400, 401, 402
Linear Scale AT112	539	405
Linear Scale AT113	539	403, 404
Linear Scale AT116	539	407
Linear Scale AT181	539	406
Linear Scale AT203	539	414
Linear Scale AT211	539	414
Linear Scale AT300	539	415
Linear Scale AT500	539	415
Linear Scale AT715	539	408
Linear Scale ST24 / ST44	579	416
Linear Scale ST36	579	417
Linear Scale ST422	579	417, 420, 421
Litematic	318	380, 381
LSM-500S	544	384
LSM-501S	544	384
LSM-503S	544	385
LSM-506S	544	385
LSM-512S	544	386
LSM-516S	544	386
LSM-5200 Display Unit	544	388
LSM-6200 Display Unit	544	389
LSM-902/6900	544	383
LSM-9506	544	387
M		
MACH	360	574, 575
MACH-KO-GA-ME	357	573
Magnetic Base	7 / 011	307
Magnetic Double V-Block	181	314
Magnetic Stand	7	307, 308
Maintenance Kit for Gauge Block	516	358
Measurement Data Wireless : U-Wave	02AZD	25
Measurement Data Wireless : U-Wave	02AZE	26
Measuring Angle 90°	972	315
Measuring Microcope MF D-Series	176	436
Measuring Microscope MF D-Series	176	434
Measuring Microscope MF-U D-Series	176	442, 445
MeasurLink 7	64AAB	15, 16, 17, 18
MeasurLink 7	64AAS	18, 19
Metric Workshop Vernier Caliper	160	185
MF Measuring Microscope	176	430, 431, 432, 433, 435
MF-U Measuring Microscope	176	437, 438, 439, 440, 441

Description	Series No.	Page
Micrometer colour ratchets/speeders	985	99
Micrometer Gauge Block	516	347
Micrometer Head	250	108
Micrometer Interchangeable anvil	117	86
Micrometer Interchangeable anvil	317	85
Micrometer non rotating spindle	406	41
Micrometer Setting	167	94, 95, 96
Micrometer Stands	156	98
Micro-Vickers and Vickers Set	810	544, 545
Micro-Vickers Hardness HM-110/120	810	540, 541
Micro-Vickers Hardness HM-210/220	810	537, 538
MICSYS-SA1 2D Encoder	549	422
Mirrors for Profile Projectors	172	613
MiSTAR Series	191	566
M-NanoCoord	NANO	604
MUX-10F Transmitter	264	30
O		
Objectives	378	455, 456, 457, 458, 459, 460, 461
Objectives Lens ML-Series	375	454
Oil Micrometer	207	99
One Revolution Dial Indicator	1	250
One Revolution Dial Indicator	2	258, 259, 260
Optical Flats	158	102
Optical Parallels	157	101
OPTI-FIX	K55	609, 610
Optional Accessories for Depth Gauge	900	218
Optional Accessories for Roundtest	211	534
Optional Accessories for Surftest, Contracer, Formtracer	178	516, 517
Optional Accessories Linear Height	518	232
Optional Accessory for Calipers	05	203
Optional Accessory for Height Gauge	900	227, 228
Optional Accessory for Linear Height	518	230
Optional Software USB Communication Tool	178	508
Optional Styli and Arms for Contracer and Formtracer SV-C series	218	514, 515
Optional Styli for Roundtest	211	532, 533
Optional Styli for Surftest and Formtracer SV-C series	178	509, 510, 511, 512, 513
OPTOEYE Edge Sensor	332	474
Outside Micrometer	102	45
Outside Micrometer	103	46, 47
Outside Micrometer adjustable anvil	105	52
Outside Micrometer interchangeable anvils	104	50
Outside Micrometer interchangeable anvils	303/304	51
Overlay Chart Set	999	475, 476, 477
Overview CNC Linear Scale	539	412
P		
Paper Rolls	270	614
PH-3515F Profile Projector	172	471, 472
PH-A14 Profile Projector	172	469, 470
PJ-A3000 Profile Projector	302	462, 463
PJ-H30 Profile Projector	303	464, 465, 466
Pocket Magnifiers	183	425
Point Micrometer	112	76
Precision Bench Centres	967	309
Precision Magnifier	183	424
Precision plug gauge set	926	339
Precision Sine	930	311, 312
Precision vice	930	310, 311
Presentation Gauge block	516	341, 342
PV-5110 Profile Projector	304	467, 468
Q		
Quick DIGIMATIC Micrometer	227	43
Quick Image	`	587
QUICK MINI Thickness Gauge	700	290
Quick Scope	359	589, 591
Quick Thickness Gauge	7	291

Description	Series No.	Page
Quick Vision	363	593, 594, 595, 596, 598
Quick Vision	365	599, 600, 601
Quick Vision Accel	363	597
Quick Vision WLI	363	602
QVPAK Vision Software	SOFT	605
R		
Ratchet Thimble Micrometer	102	44
Reticles for Measuring Microscope TM-500	176	429
Roundtest Extreme RA-2200CNC	211	529
Roundtest Extreme RA-H5200CNC	211	530, 531
Roundtest RA-10	211	519, 520
Roundtest RA-120 and RA-120P	211	521, 522
Roundtest RA-1600	211	523, 524
Roundtest RA-2200	211	525, 526
Roundtest RA-H5200	211	527, 528
S		
Screw Thread Micrometer	125	62
Screw Thread Micrometer	126	60, 61
Sensorpak	02	361
Setting Rings	177	164
Sheet Metal Micrometer	118	54
Sheet Metal Micrometer Graduated Dial	119	55
Small Hole Gauge Set	154	163
Snap Gauge/Snap Micrometer	523	89, 90
Software Quick Scope QSPAK	SOFT	592
Spindle for Micrometer	208	100
Spline Micrometer	111	71
Spring Balance	546	298
Standard Scales	182	335, 336
Standard Vernier Height Gauge	514	221
Steel Caliper Gauge Block	516	346
Steel Gauge Block	516	343, 344, 345
Steel Gauge Block	611	348, 349
Steel Micrometer Gauge Block	516	346
Steel Rule	182	323
Step master	516	334
STRATO-APEX	355	569, 570
Styli Kits	K65	579, 580, 581
Surftest Extreme SV-3000CNC	178	493
Surftest Extreme SV-M3000CNC	178	494
Surftest SJ-210	178	480, 481
Surftest SJ-210 and SJ-310 - S-Type	178	483
Surftest SJ-310	178	482
Surftest SJ-410	178	486, 487
Surftest SJ-500 and SJ-500P	178	488, 490
Surftest SV-2100 and SV-2100P	178	489, 490
Surftest SV-3100	178	492
Surftest SV-3200	178	491
Swivel Vernier Caliper	536	192
T		
Table Glass	200	613
Telescopic Gauge Set	155	163
Thickness Gauge	184	321
Timerbox	011	31
TM-500 Measuring Microscope	176	426, 427, 428
Tolerance Box	011	33
Touch Probe Option	364	606
Tube Micrometer	115	74
Tube Thickness Caliper	536	201
Tube Thickness Caliper	573	201
Tyre Tread Depth Gauge	571	217
U		
UMAP	Umap	603
Universal Height Master	515	326
Universal Micrometer	116	58
USB Input Tool Direct (Digimatic USB cable)	06ADV	23
USB Input Tool - Keyboard Interface	264	27
USB-ITPAK	06AEN	24

Description	Series No.	Page
V		
V-Anvil Micrometer	114	82
VARI-FIX	5509	584
Vernier Blade Type Caliper	536	195
Vernier Caliper	530	180
Vernier Caliper carbide-tipped	530	181
Vernier Caliper Nib Style and Standard Jaws	533	184
Vernier Caliper with fine adjustment	532	182
Vernier Caliper with thumb clamp	531	182
Vernier Depth Gauges	527	214
Vernier Neck Caliper	536	197
Vernier Offset Caliper	536	190
Vernier Offset Centreline Caliper	536	191
Vernier Point Caliper	536	194
Vertical Linear Scale	572	397, 398, 399
Video Microscope Unit VMU Series	378	453
Vision accessories	02A	608
Vision Probe System for CMMs	Probe	576
Vision Software	SOFT	588
Vision Unit	359	450
VMU Video Microscope Unit	378	452
W		
Wire Micrometer	147	84
Workpiece Fixtures	172	478
Workshop Vernier Caliper with Long jaws	534	186
Z		
ZERO CERA Block	617	355

Mitutoyo

Mitutoyo

Proud to be a Global Industry Partner of **WorldSkills International**

Exclusive Category Sponsor of
Metrology Measuring Instruments,
Machines and Systems.

"There is no better aim than helping the youth of today meet the challenges of the future.

Mitutoyo is dedicated to improving society through the power of skills to elevate the quality of work produced by industries through innovation and a commitment to unsurpassed excellence."

To find out more visit
http://www.mitutoyo.eu/worldskills2017

worldskills AbuDhabi2017
مسابقة المهارات العالمية أبوظبي 2017

METROLOGY EDUCATION PACK

Mitutoyo provide *FREE* education packs to serve as convenient references to the theory and practice of engineering metrology for use in the classroom, workplace and laboratory. To claim your pack visit www.mituoyo.eu/education

©Mitutoyo 06/2017

PRE 1245

Mitutoyo Europe GmbH
Borsigstrasse 8 -10, 41469 Neuss, GERMANY
TEL: +49 (0) 2137-102-0 FAX: +49 (0) 2137-102-351
www.mitutoyo.eu

Mitutoyo Deutschland GmbH
Borsigstrasse 8-10, 41469 Neuss, GERMANY
TEL: +49 (0) 2137 102-0 FAX: +49 (0) 2137-86 85
www.mitutoyo.de

Mitutoyo BeNeLux • Showroom BE
Hogenakkerhoekstraat 8, 9150 Kruibeke, BELGIUM
TEL: +32 (0) 3 254 04 44 FAX: +32 (0) 3 254 04 45
www.mitutoyoBeNeLux.com

Mitutoyo Česko s.r.o.
Dubská 1626, 415 01 Teplice, CZECH REP.
TEL: +420 417 579 866 FAX: +420 417 579 867
www.mitutoyo.cz

Mitutoyo France
Paris Nord 2
123 rue de la Belle Etoile, BP 59267 ROISSY EN FRANCE
95957 ROISSY CDG CEDEX, FRANCE
TEL: +33 (1) 49 38 35 00 FAX: +33 (1) 48 63 27 70
www.mitutoyo.fr

Mitutoyo Austria GmbH
Johann Roithner Straße 131 (Wirtschaftspark)
4050 Traun, AUSTRIA
TEL: +43 (0) 72 29 23 85 00 FAX: +43 (0) 72 29 23 85 090
www.mitutoyo.at

Mitutoyo (UK) Ltd.
Joule Road, West Point Business Park, Andover,
Hampshire SP10 3UX , UNITED KINGDOM
TEL: +44 (0) 1264 353 123 FAX: +44 (0) 1264 354 883
www.mitutoyo.co.uk

Mitutoyo Hungária Kft.
Záhony utca 7, D-épület / fsz,
1031 Budapest, HUNGARY
TEL: +36 (0) 1 21 41 447 FAX: +36 (0) 1 21 41 448
www.mitutoyo.hu

Mitutoyo Italiana S.r.l.
Corso Europa, 7
20020 Lainate (MI), ITALY
TEL: +39 (0) 2 935 781 FAX: +39 (0) 2 93 73 290
www.mitutoyo.it

Mitutoyo BeNeLux • Showroom NL
Wiltonstraat 25, 3905 KW Veenendaal
THE NETHERLANDS
TEL: +31 (0) 318-534 911 FAX: +31 (0) 318-534 811
www.mitutoyoBeNeLux.com

Mitutoyo Romania S.R.L.
1A, Drumul Garii Odai Street, Ground Foor, Room G03
OTOPENI-ILFOV, ROMANIA
TEL: +(40) 311 012 088 FAX: +(40) 311 012 089
www.mitutoyo.ro

Mitutoyo RUS LLC
13 Sharikopodshipnikovskaya, bld.2, 115088 Moscow,
RUSSIAN FEDERATION
TEL: +7 (0) 495 745 07 52 FAX: +7 (0) 495 745 07 52
www.mitutoyo.ru

Mitutoyo Scandinavia AB
Släntvägen 6, 194 54 Upplands Väsby, SWEDEN
TEL: +46 (0) 8 594 109 50 FAX: +46 (0) 8 590 924 10
www.mitutoyo.se

M³ Solution Center Pirkkala
Viherkiitäjä 2A, 33960 Pirkkala, FINLAND
Tel: +358 (0) 20 792 9640
www.mitutoyo.fi

Mitutoyo (Schweiz) AG
Steinackerstrasse 35, 8902 Urdorf, SWITZERLAND
TEL: +41 (0) 44 736 11 50 FAX: +41 (0) 44 736 11 51
www.mitutoyo.ch

Mitutoyo Polska Sp. z o.o.
ul. Graniczna 8 A, 54-610 Wrocław, POLAND
TEL: +48 (0) 71 354 83 50 FAX: +48 (0) 71 354 83 55
www.mitutoyo.pl